Siliguri Institute of Technology

P.O. SUKNA, SILIGURI, DIST. DARJEELING, PIN : 734 009
Tel. : (0353) 2778002 / 04, Fax : (0353) 2778003
e-mail : sittechno@rediffmail.com
sitsiliguriwb@yahoo.com

Courses that include experiential learning through project work/field work/internship

Department	**Course Code**	**Course Name**	**Old/New**
MBA	MB303	INTERNSHIP AND VIVA VOCE	NEW
CE	CE782	INDUSTRIAL TRAINING	Old
	CE783	PROJECT -I	Old
	CE881	PROJECT -II	Old
ECE	EC781	INDUSTRIAL TRAINING	Old
	EC782	PROJECT -I	Old
	EC882	PROJECT -II	Old
CSE	CS792	INDUSTRIAL TRAINING	Old
	CS794	PROJECT -I	Old
	CS892	PROJECT -II	Old
IT	IT794	INDUSTRIAL TRAINING	Old
	IT792	PROJECT -I	Old
	IT892	PROJECT -II	Old
EE	EE781	SEMINAR ON INDUSTRIAL TRAINING	Old
	EE783	PROJECT -I	Old
	EE881	PROJECT -II	Old

For Additional Information Kindly go to the following links
https://www.sittechno.org/criteria-1-3-2-aqar-support-links.html

Principal
Siliguri Institute of Technology

Kolkata Office : Chatterjee International Centre, 12th Floor, 33A, Chowringhee Road, Kolkata - 71
Tel. : (033) 2226 9785, 2226 4396, 2357 6163, 2357 6164, Fax : (033) 2226 2814, 2357 2450
e-mail : info@technoindiagroup.com, Website : www.technoindiagroup.com

Syllabus for B.Tech(Civil Engineering) Up to Third Year

Civil Engineering Second Year – Third Semester

A. THEORY							
Sl. No	Field	Theory	Contact hours per week				Cr. Points
			L	T	P	Total	
1	HU301	Values & Ethics in Profession	3	0	0	3	3
2	PH301	Physics - 2	3	1	0	4	4
3	CH301	Basic Environmental Engineering & Elementary Biology	(2+1)	0	0	3	3
4	CE301	Solid Mechanics	3	0	0	3	3
5	CE302	Surveying	3	1	0	4	4
6	CE303	Building Material & Construction	3	1	0	4	4
Total Theory						21	21
B. PRACTICAL							
7	PH391	Physics - 2	0	0	3	3	2
8	CE391	Solid Mechanics	0	0	3	3	2
9	CE392	Surveying Practice I	0	0	3	3	2
10	CE393	Building Design & Drawing	0	0	3	3	2
Total Practical						12	8
Total of Semester						33	29

Second Year – Fourth Semester

A. THEORY							
Sl. No	Field	Theory	Contact hours per week				Cr. Points
			L	T	P	Total	
1	M(CS)401	Numerical Methods	2	1	0	3	2
2	M402	Mathematics - 3	3	1	0	4	4
3	CE401	Fluid Mechanics	3	0	0	3	3
4	CE402	Structural Analysis	3	1	0	4	4
5	CE403	Soil Mechanics	3	1	0	4	4
Total Theory						18	17
B. PRACTICAL							
6	HU481	Technical Report Writing & Language Lab Practice	0	0	3	3	2
7	M(CS)491	Numerical Methods	0	0	2	2	1
8	CE491	Fluid Mechanics	0	0	3	3	2
9	CE492	Surveying Practice -II	0	0	3	3	2
10	CE493	Soil Mechanics Lab - I	0	0	3	3	2
Total Practical						14	9
Total of Semester						32	26

Syllabus for B.Tech(Civil Engineering) Up to Third Year

Third Year – Fifth Semester

A. THEORY							
Sl. No	Field	Theory	Contact hours per week				Cr. Points
			L	T	P	Total	
1	HU501	Economics for Engineers	3	0	0	3	3
2	CE501	Foundation Engineering	3	1	0	4	4
3	CE502	Design of RC Structures	3	1	0	4	4
4	CE503	Concrete Technology	3	0	0	3	3
5	CE504	Engineering Geology	3	0	0	3	3
Total Theory						17	17
B. PRACTICAL							
6	CE591	Soil Mechanics Lab – II	0	0	3	3	2
7	CE592	Concrete Laboratory	0	0	3	3	2
8	CE593.	Quantity Surveying, Specifications and Valuation	0	0	3	3	2
9	CE594	Engineering Geology Laboratory	0	0	3	3	2
Total Practical						12	8
Total of Semester						29	25

Third Year – Sixth Semester

A. THEORY							
Sl. No	Field	Theory	Contact hours per week				Cr. Points
			L	T	P	Total	
1	HU601	Principles of Management	2	0	0	2	2
2	CE601	Highway & Transportation Engineering	3	0	0	3	3
3	CE602	Design of Steel Structure	3	0	0	3	3
4	CE603	Construction Planning and Management	3	0	0	3	3
5	CE604	Professional Elective – I	3	0	0	3	3
6	CE605	Free Elective – I	3	0	0	3	3
Total Theory						17	17
B. PRACTICAL							
7	CE691	Highway & Transportation Engg Lab	0	0	3	3	2
8	CE692	Detailing of RC and Steel Structures	0	0	3	3	2
9	CE693	CAD Laboratory	0	0	3	3	2
10	CE681	Seminar	0	0	3	3	2
Total Practical						12	8
Total of Semester						29	25

Professional Elective – I

1. CE604A : Bridge Engineering
2. CE604B : Prestressed Concrete
3. CE604C : Structural Dynamics and Earthquake Engineering

Free Elective – I

1. CE605A : Operations Research(M)
2. CE605B : Human Resource Management(HSS)
3. CE6505C : Materials Handling(ME)

Syllabus for B.Tech(Civil Engineering) Up to Third Year

Proposed Structure for Forthcoming Semester of B.Tech Courses on CE

Fourth Year – Seventh Semester

Sl. No	Field	Theory	Contact hours per week				Cr. Points
			L	T	P	Total	
A. THEORY							
1	CE701	Environmental Engineering	3	0	0	3	3
2	CE702	Water Resource Engineering	3	0	0	3	3
3	CE703	Professional Elective II	3	0	0	3	3
4	CE704	Professional Elective III	3	0	0	3	3
5	CE705	Free Elective II	3	0	0	3	3
Total Theory						15	15
B. PRACTICAL							
6	HU781	Group Discussion	0	0	3	3	2
7	CE791.	Environmental Engg Lab	0	0	3	3	2
8	CE792	Civil Engineering Practice Sessional	0	0	3	3	2
9	CE793	Free Elective Laboratory	0	0	3	3	2
10	CE782	Industrial Training	4 weeks duration during 6th-7th Semester break				2
11	CE783	Project Part I				6	2
Total Practical						18	12
Total of Semester						33	27

Fourth Year – Eighth Semester

Sl. No	Field	Theory	Contact hours per week				Cr. Points
			L	T	P	Total	
A. THEORY							
1	HU801A HU801B	Organisational Behaviour/ Project Management	2	0	0	2	2
2	CE801	Professional Elective IV	3	0	0	3	3
3	CE802	Professional Elective V	3	0	0	3	3
Total Theory						8	8
B. PRACTICAL							
4	CE891	Structural Engineering Design Practice	0	0	6	6	4
5	CE881	Project Part II	0	0	12	12	6
6	CE882	Grand – Viva					3
Total Practical						18	13
Total of Semester						26	21

Free Elective II
CE705A Engineering Materials (ME303)
CE705B Electrical and Electronic Measurement (EE402)

Free Elective Lab
CE793A Material Testing Lab (ME493)
CE793B Electrical and Electronic Measurement Laboratory (EE492)

List of Electives:

Professional Elective – II

1. CE703A Advanced Foundation Engineering
2. CE703B Soil Stabilization and Ground Improvement Techniques
3. CE703C Advanced Highway and Transportation Engineering

Professional Elective – III

1. CE704A Advanced Structural Analysis
2. CE704B Hydraulic Structures

Professional Elective – IV

1. CE801A Environmental Pollution and Control
2. CE801B Water Resource Management and Planning
3. CE801C Remote Sensing and GIS

Professional Elective – V

1. CE802A Finite Element Method
2. CE802B Dynamics of Soils & Foundations
3. CE802C Design of Tall Buildings
4. CE802D Pavement Design

Syllabus for B.Tech(Civil Engineering) Up to Third Year

HU-301
Contracts:3L Credits- 3

III Semester Theory

VALUES & ETHICS IN PROFESSION

Science, Technology and Engineering as knowledge and as Social and Professional Activities

Effects of Technological Growth:

Rapid Technological growth and depletion of resources, Reports of the Club of Rome. Limits of growth: sustainable development
Energy Crisis: Renewable Energy Resources
Environmental degradation and pollution. Eco-friendly Technologies. Environmental Regulations, Environmental Ethics
Appropriate Technology Movement of Schumacher; later developments
Technology and developing notions. Problems of Technology transfer, Technology assessment impact analysis.
Human Operator in Engineering projects and industries. Problems of man, machine, interaction, Impact of assembly line and automation. Human centered Technology.

Ethics of Profession:

Engineering profession: Ethical issues in Engineering practice, Conflicts between business demands and professional ideals. Social and ethical responsibilities of Technologists. Codes of professional ethics. Whistle blowing and beyond, Case studies.

Profession and Human Values:

Values Crisis in contemporary society
Nature of values: Value Spectrum of a good life Psychological

values: Integrated personality; mental health
Societal values: The modern search for a good society, justice, democracy, socialism, rule of law, values in Indian Constitution.
Aesthetic values: Perception and enjoyment of beauty, simplicity, clarity
Moral and ethical values: Nature of moral judgements; canons of ethics; ethics of virtue; ethics of duty; ethics of responsibility.

Books:

1. Stephen H Unger, Controlling Technology: Ethics and the Responsible Engineers, John Wiley & Sons, New York 1994 (2nd Ed)
2. Deborah Johnson, Ethical Issues in Engineering, Prentice Hall, Englewood Cliffs, New Jersey 1991.
3. A N Tripathi, Human values in the Engineering Profession, Monograph published by IIM, Calcutta 1996.

Physics 2 Code:
PH-301
Contacts: 4L
Credit: 3+1

Module 1:
Vector Calculus:
1.1 Physical significances of grad, div, curl. Line integral, surface integral, volume integral- physical examples in the context of electricity and magnetism and statements of Stokes theorem and Gauss theorem [No Proof]. Expression of grad, div, curl and Laplacian in Spherical and Cylindrical co-ordinates. 2L

Module 2 :
Electricity
Coulumbs law in vector form. Electrostatic field and its curl. Gauss's law in integral form and conversion to differential form . Electrostatic potential and field, Poisson's Eqn. Laplace's eqn (Application to Cartesian, Spherically and Cylindrically symmetric systems – effective 1D problems) Electric current, drift velocity, current density, continuity equation, steady current. 5L
Dielectrics-concept of polarization, the relation $D=\varepsilon_0 E+P$, Polarizability. Electronic polarization and polarization in monoatomic and polyatomic gases. 3L

Module 3:
Magnetostatics & Time Varying Field:

3. Lorentz force, force on a small current element placed in a magnetic field. Biot-Savart law and its applications, divergence of magnetic field, vector potential, Ampere's law in integral form and conversion to differential form. Faraday's law of electro-magnetic induction in integral form and conversion to differential form.
3L

Module 4:
Electromagnetic Theory:
4.1 Concept of displacement current Maxwell's field equations, Maxwell's wave equation and its solution for free space.

E.M. wave in a charge free conducting media, Skin depth, physical significance of Skin Depth, E.M. energy flow, &

Poynting Vector.

6L

Module 5:

Quantum Mechanics:

Generalised coordinates, Lagrange's Equation of motion and Lagrangian, generalised force potential, momenta and energy. Hamilton's Equation of motion and Hamiltonian. Properties of Hamilton and Hamilton's equation of motion.

4L

Course should be discussed along with physical problems of 1-D motion

Concept of probability and probability density, operators, commutator. Formulation of quantum mechanics and Basic postulates, Operator correspondence, Time dependent Schrödinger's equation, formulation of time independent Schrödinger's equation by method of separation of variables, Physical interpretation of wave function ψ (normalization and probability interpretation), Expectation values, Application of Schrödinger equation – Particle in an infinite square well potential (1-D and 3-D potential well), Discussion on degenerate levels. 9L

Module 6:

Statistical Mechanics:
Concept of energy levels and energy states. Microstates, macrostates and thermodynamic probability, equilibrium macrostate. MB, FD, BE statistics (No deduction necessary), fermions, bosons (definitions in terms of spin, examples), physical significance and application, classical limits of quantum statistics Fermi distribution at zero & non-zero temperature, Calculation of Fermi level in metals, also total energy at absolute zero of temperature and total number of particles, Bose-Einstein statistics – Planck's law of blackbody radiation..

7L

Basic Environmental Engineering & Elementary Biology
Code: CH301
Contacts: 3L = 3
Credits: 3

General

Basic ideas of environment, basic concepts, man, society & environment, their interrelationship.

1L

Mathematics of population growth and associated problems, Importance of population study in environmental engineering, definition of resource, types of resource, renewable, non-renewable, potentially renewable, effect of excessive use vis-à-vis population growth, Sustainable Development. 2L

Materials balance: Steady state conservation system, steady state system with non conservative pollutants, step function.

1L

Environmental degradation: Natural environmental Hazards like Flood, earthquake, Landslide-causes, effects and control/management; Anthropogenic degradation like Acid rain-cause, effects and control. Nature and scope of Environmental Science and Engineering.

2L

Ecology

Elements of ecology: System, open system, closed system, definition of ecology, species, population, community, definition of ecosystem- components types and function. 1L

Structure and function of the following ecosystem: Forest ecosystem, Grassland ecosystem, Desert ecosystem, Aquatic ecosystems, Mangrove ecosystem (special reference to Sundar ban); Food chain [definition and one example of each food chain], Food web.

2L

Biogeochemical Cycle- definition, significance, flow chart of different cycles with only elementary reaction [Oxygen, carbon, Nitrogen, Phosphate, Sulphur]. 1L

Biodiversity- types, importance, Endemic species, Biodiversity Hot-spot, Threats to biodiversity, Conservation of biodiversity.

2L

Air pollution and control

Atmospheric Composition: Troposphere, Stratosphere, Mesosphere, Thermosphere, Tropopause and Mesopause.

1L

Energy balance: Conductive and Convective heat transfer, radiation heat transfer, simple global temperature model [Earth as a black body, earth as albedo], Problems. 1L

Green house effects: Definition, impact of greenhouse gases on the global climate and consequently on sea water level, agriculture and marine food.Global warming and its consequence, Control of Global warming. Earth's heat budget. 1L

Lapse rate: Ambient lapse rate Adiabatic lapse rate, atmospheric stability, temperature inversion (radiation inversion).

2L

Atmospheric dispersion: Maximum mixing depth, ventilation coefficient, effective stack height, smokestack plumes and Gaussian plume model. 2L

Definition of pollutants and contaminants, Primary and secondary pollutants: emission standard, criteria pollutant.

Sources and effect of different air pollutants- Suspended particulate matter, oxides of carbon, oxides of nitrogen, oxides of sulphur, particulate, PAN. 2L

Smog, Photochemical smog and London smog.

Depletion Ozone layer: CFC, destruction of ozone layer by CFC, impact of other green house gases, effect of ozone modification.

1L

Standards and control measures: Industrial, commercial and residential air quality standard, control measure (ESP. cyclone separator, bag house, catalytic converter, scrubber (ventury), Statement with brief reference).

1L

Water Pollution and Control

Hydrosphere, Hydrological cycle and Natural water.

Pollutants of water, their origin and effects: Oxygen demanding wastes, pathogens, nutrients, Salts, thermal application, heavy metals, pesticides, volatile organic compounds. 2L

River/Lake/ground water pollution: River: DO, 5 day BOD test, Seeded BOD test, BOD reaction rate constants, Effect of oxygen demanding wastes on river[deoxygenation, reaeration], COD, Oil, Greases, pH.

2L

Lake: Eutrophication [Definition, source and effect]. 1L

Ground water: Aquifers, hydraulic gradient, ground water flow (Definition only) 1L

Standard and control: Waste water standard [BOD, COD, Oil, Grease],

Water Treatment system [coagulation and flocculation, sedimentation and filtration, disinfection, hardness and alkalinity, softening]

Waste water treatment system, primary and secondary treatments [Trickling filters, rotating biological contractor, Activated sludge, sludge treatment, oxidation ponds] tertiary treatment definition.

2L

Water pollution due to the toxic elements and their biochemical effects: Lead, Mercury, Cadmium, and Arsenic

1L

Land Pollution

Lithosphere; Internal structure of earth, rock and soil 1L

Solid Waste: Municipal, industrial, commercial, agricultural, domestic, pathological and hazardous solid wastes; Recovery and disposal method- Open dumping, Land filling, incineration, composting, recycling.

Solid waste management and control (hazardous and biomedical waste). 2L

Noise Pollution

Definition of noise, effect of noise pollution, noise classification [Transport noise, occupational noise, neighbourhood noise] 1L

Definition of noise frequency, noise pressure, noise intensity, noise threshold limit value, equivalent noise level,

L_{10} (18 hr Index) , Ld_n .

Noise pollution control. 1L

Environmental Management:

Environmental impact assessment, Environmental Audit, Environmental laws and protection act of India, Different international environmental treaty/ agreement/ protocol. 2L

References/Books

1. Masters, G. M., “Introduction to Environmental Engineering and Science”, Prentice-Hall of India Pvt. Ltd., 1991. De, A. K., “Environmental Chemistry”, New Age International.

SOLID MECHANICS
Code: CE301 Contact: 3L
Credits: 3

Mod	Details of Course Content	Hours	Total
	Review of Basic Concepts of Stress and Strain: Normal stress, Shear stress, Bearing stress, Normal strain, Shearing strain; Hooke’s law; Poisson’s ratio; Stress-strain diagram of ductile and brittle materials; Elastic limit; Ultimate stress; Yielding; Modulus of elasticity; Factor of safety.		

Syllabus for B.Tech(Civil Engineering) Up to Third Year

I	Beam Statics: Support reactions, concepts of redundancy, axial force, shear force and bending moment diagrams for concentrated, uniformly distributed, linearly varying load, concentrated moments in simply supported beams, cantilever and overhanging beams	9	42
II	**Symmetric Beam Bending**: Basic kinematic assumption, moment of inertia, elastic flexure formulae and its application, Bending and shear stress for regular sections, shear centre	13	
	Deflection of statically determinate beams: Fundamental concepts: Elastic curve, moment Curvature relationship, governing differential equation, boundary conditions: Direct integration solution		
III	**Analysis of determinate plane trusses**: Concepts of redundancy, Analysis by method of joints, method of sections	10	
	Two Dimensional Stress Problems: Principal stresses, maximum shear stresses, Mohr's circle of stresses, construction of Mohr's circle		
IV	**Introduction to thin cylindrical & spherical shells**: Hoop stress and meridonial - stress and volumetric changes.	10	
	Torsion: Pure torsion, torsion of circular solid shaft and hollow shafts, torsional equation, torsional rigidity, closed coil helical; springs		
	Columns: Fundamentals, criteria for stability in equilibrium, column buckling theory, Euler's load for columns with different end conditions, limitations of Euler's theory – problems, eccentric load and secant formulae.		

References

Sl. No	Name	Author	Publishers
1	Elements of Strength of Material	S. P. Timoshenko & D. H. Young	EWP Pvt. Ltd
2	Engineering Mechanics of Solids	E. P. Popov	Pearson Education
3	Strength of Materials	R. Subramanian	OXFORD University Press
4	Strength of Material	Bansal	
5	Strength of Materials	S S Bhavikatti	Vikas Publishing House Pvt. Ltd
6	Strength of Material	A. Pytel & F. L. Singer	AWL Inc
7	Strength of Material	Ramamrutham	
8	Engineering Mechanics I by	J. L. Mariam	John Willey
9	Engineering Mechanics	I. H. Shames	PHI
10	Fundamentals of Strength of Material	Nag & Chandra	WIE

SURVEYING Code:
CE302 Contact: 3L +
1T Credits: 4

Mod	Details of Course Content	Hours	Total
I	**Introduction:** Definition, classification of surveying, objectives, principles of surveying	12	42
	Chain surveying: Chain and its types, Optical square, Cross staff, Reconnaissance and site Location, Locating ground features by offsets – Field book. Chaining for obtaining the outline of structures, Methods for overcoming obstacles, Conventional symbols, Plotting chain survey and Computation of areas, Errors in chain surveying and their elimination: Problems		
	Compass Surveying: Details of prismatic compass, Use and adjustments, Bearings, Local attraction and its adjustments. Chain and compass surveying of an area, Booking and plotting, Adjustments of traverse, Errors in compass surveying and precautions: Problems.		
	Plane Table Surveying: Equipment, Orientation, Methods of Plane Tabling, Three Point Problems.		

II	**Leveling:** Introduction, Basic definitions, Detail of dumpy Level, Temporary adjustment of Levels, Sensitiveness of bubble tube, Methods of leveling – differential, Profile by Leveling, Effect of curvature and refraction, Automatic levels, Plotting longitudinal sections and Cross sections; Measurement of area and volume	11	

	Contouring: Topographic Map, Characteristics of Contour, Contour Interval. Methods of Locating Contours, Interpolation of Contours		
III	**Theodolite Surveying:** Components of a Transit Theodolite, Measurement of horizontal and vertical Angles, Co-ordinates and traverse Table	11	
	Tacheometry: Definition, Details of stadia System, Determination of horizontal and vertical distance with Tacheometer- Staff held vertically and normal to the line of sight		
IV	**Simple & Transition Curves:** Definition, Degree of Curve, Elements of Simple Curve, Setting out by Linear method and Rankine's tangential method, Transition Curves.	8	
	Introduction to Total Station with Field applications		

References

Sl No.	Title	Author
1	Surveying:- Vol - I & II	B.C. Punmia
2	Surveying & Leveling	R. Subramanian (OXFORD)
3	Surveying& Leveling Vol - I [Part I & II]	T.P.Kanetkar & Kulkarni
4	Surveying:- Vol - I & II	S.K. Duggal
5	Fundamental of Engineering Survey	J.K. Ghosh (Studium Press, Roorkee)
6	Higher Surveying	Dr. A. M. Chandra
7	Surveying	R.B. Gupta & B.K. Gupta
9	Plane and Geodetic Surveying (Vol - I & II)	David Clark
10	Fundamental of Surveying	S. K. Roy
11	Surveying	Saikia & Das (PHI)

BUILDING MATERIAL AND CONSTRUCTION
Code: CE303
Contact: 3L + 1 T
Credits: 4

Mod	Details of Course Content	Hours	Total
	Material of Construction		
I	**Bricks:** Classification, Characteristics of good bricks, Ingredients of good brick earth, Harmful substance in brick Earth, Different forms of bricks, Testing of bricks as per BIS. Defects of bricks.	13	
	Aggregates: Classification, Characteristics, Deleterious substances, Soundness, Alkali – aggregates reaction, Fine aggregates, Coarse aggregates, Testing of aggregates		
	Lime: Impurities in limestone, Classification, Slaking and hydration, Hardening, Testing, Storage, Handling		
	Cement & Concrete: **Cement:** OPC: Composition, PPC, Slag cement, Hydration, setting time **Concrete**: Types, ingredients, W/C ratio, Workability, Different grades in cement concrete, Tests on cement concrete		
II	**Mortars**: Classification, Uses, Characteristics of good mortar, Ingredients. Cement mortar, Lime mortar, Lime cement mortar, special mortars	10	
	Wood and Wood Products: Classification of Timber, Structure, Characteristics of good timber, Seasoning of timber, Defects in Timber, Diseases of timber, Decay of Timber, Preservation of Timber Testing of Timber, Veneers , Plywood, Fibre Boards, Particle Boards, Chip Boards , Black Boards, Button Board and Laminated Boards, Applications of wood and wood products		
	Paints, Enamels and Varnishes: Composition of oil paint, characteristic of an ideal paint, preparation of paint, covering power of paints, Painting: Plastered surfaces, painting wood surfaces, painting metal Surfaces. Defects, Effect of weather, enamels, distemper, water wash and colour wash, Varnish , French Polish, Wax Polish		

	Miscellaneous Materials: Gypsum: Classification, Plaster of Paris, Gypsum wall Plasters, Gypsum Plaster Boards, Adhesives, Heat and sound insulating materials, Geo-synthetics		

Syllabus for B.Tech(Civil Engineering) Up to Third Year

Building Construction			42
III	**Foundations: Function of Foundations, Essential requirement of good foundation, Different types of shallow and deep Foundations**	10	
	Brick masonry: Definitions, Rules for bonding, Type of bonds – stretcher bond, Header bond, English bond, Flemish Bond, Comparison of English Bond and Flemish Bond (one and one and half brick thick wall)		
	Wall, Doors and Windows: Load bearing wall, Partition wall, Reinforced brick wall Common types of doors and windows of timber and metal		
IV	**Stairs: Technical Terms, Requirements of good stair, Dimension of steps, Classification, Geometric design of a dog legged stair case**	9	
	Flooring: Components of a floor, selection of flooring materials, Brick flooring, Cement concrete flooring, mosaic, marble, Terrazzo flooring, Tiled roofing		
	Plastering and Pointing: Plastering with cement mortar, Defects in plastering, pointing, white washing, colour washing, Distempering,		
	Roofs: Types, Pitched roofs and their sketches, Lean – to roof, King Post – Truss, Queen post truss and Simple steel Truss , Roof Covering materials: AC sheets GI sheet		

References

Sl. No	Name	Author	Publishers
1	1. Building Materials	S.K. Duggal	
2	2. Building Materials	P.C. Varghese	PHI
3	Engineering Materials	S.C. Rangwala	
4	Concrete Technology	M. S. Shetty	
5	Concrete Technology[	A.M. Nevile & J.J. Brooks	Pearson Education
6	Building Construction	B.C. Punmia	
7	Building Construction and Foundation Engineering	Jha and Sinha	

Practical

Code: PH-391
Contacts: (3P)
Credit: (2)

Group 1: Experiments on Electricity and Mangentism

1. Determination of dielectric constant of a given dielectric material.
3. Determination of resistance of ballistic galvanometer by half deflection method and study of variation of logarithmic decrement with series resistance.
4. Determination of the thermo-electric power at a certain temperature of the given thermocouple.
5. Determination of specific charge (e/m) of electron by J.J. Thomson's method.

Group 2: Quantum Physics

6. Determination of Planck's constant using photocell.
7. Determination of Lande'g factor using Electron spin resonance spetrometer.
8. Determination of Stefan's radiation constant
9. Verification of Bohr's atomic orbital theory through Frank-Hertz experiment.
10. Determination of Rydberg constant by studying Hydrogen/ Helium spectrum

Group 3: Modern Physics

11. Determination of Hall co-efficient of semiconductors.
12. Determination of band gap of semiconductors.

13. To study current-voltage characteristics, load response, areal characteristics and spectral response of photo voltaic

solar cells.

Syllabus for B.Tech(Civil Engineering) Up to Third Year

a) A candidate is required to perform 3 experiments taking one from each group. Initiative should be taken so that most of the Experiments are covered in a college in the distribution mentioned above. Emphasis should be given on the estimation of error in the data taken.

b) In addition a student should perform one more experiments where he/she will have to transduce the output of any of the above experiments or the experiment mentioned in c] into electrical voltage and collect the data in a computer using phoenix or similar interface.

c) Innovative experiment: One more experiment designed by the student or the concerned teacher or both.

Note:

i. Failure to perform each experiment mentioned in b] and c] should be compensated by two experiments mentioned in the above list.
ii. At the end of the semester report should sent to the board of studies regarding experiments, actually performed by the college, mentioned in b] and c]
iii. Experiment in b] and c] can be coupled and parts of a single experiment.

Recommended Text Books and Reference Books:

For Both Physics I and II

1. B. Dutta Roy (Basic Physics)
2. R.K. Kar (Engineering Physics)
3. Mani and Meheta (Modern Physics)
4.. Arthur Baiser (Perspective & Concept of Modern Physics)

Physics I (PH101/201)

Vibration and Waves

3. Kingsler and Frey
4. D.P. Roychaudhury
5. N.K. Bajaj (Waves and Oscillations)
6. K. Bhattacharya
7. R.P. Singh (Physics of Oscillations and Waves)
8. A.B. Gupta (College Physics Vol.II)
9. Chattopadhya and Rakshit (Vibration, Waves and Acoustics)

Optics

1. Möler (Physical Optics)
2. A.K. Ghatak
3. E. Hecht (Optics)
4. E. Hecht (Schaum Series)
5. F.A. Jenkins and H.E. White
6. 6. Chita Ranjan Dasgupta (Degree Physics Vol 3)

Quantum Physics

1. Eisberg and Resnick
2. A.K. Ghatak and S. Lokenathan
3. S.N. Ghoshal (Introductory Quantum Mechanics)
4. E.E. Anderson (Modern Physics)
5. Haliday, Resnick and Crane (Physics vol.III)
6. Binayak Dutta Roy [Elements of Quantum Mechanics]

Crystallography

1. S.O. Pillai (a. Solid state physics b. Problem in Solid state physics)
2. A.J. Dekker
3. Aschroft and Mermin
4. Ali Omar
5. R.L. Singhal
6. Jak Tareen and Trn Kutty (Basic course in Crystallography

Laser and Holography

1. A.K. Ghatak and Thyagarajan (Laser)
2. Tarasov (Laser)
3. P.K. Chakraborty (Optics)
4. B. Ghosh and K.G. Majumder (Optics)
5. B.B. Laud (Laser and Non-linear Optics)

6. Bhattacharyya [Engineering Physics] Oxford

Syllabus for B.Tech(Civil Engineering) Up to Third Year

Syllabus for B.Tech(Civil Engineering) Up to Third Year

Physics II(PH 301)

Classical Mechanics (For Module 5.1 in PH 301)
H. Goldstein
A.K. Roychaudhuri
R.G. Takwal and P.S. Puranik
Rana and Joag
M. Speigel (Schaum Series)
J.C. Upadhya (Mechanics)
Electricity and Magnetism
2. Reitz, Milford and Christy
3. David J. Griffith
4. D. Chattopadhyay and P.C. Rakshit
5. Shadowitz (The Electromagnetic Field)
Quantum Mechanics
7. Eisberg and Resnick
8. A.K. Ghatak and S. Lokenathan
9. S.N. Ghoshal (Introductory Quantum Mechanics)
10. E.E. Anderson (Modern Physics)
11. Haliday, Resnick and Crane (Physics vol.III)
12. Binayak Dutta Roy [Elements of Quantum Mechanics]
Statistical Mechanics
1. Sears and Sallinger (Kinetic Theory, Thermodynamics and Statistical Thermodynamics)
2. Mondal (Statistical Physics)
3. S.N. Ghoshal (Atomic and Nuclear Physics)
4. Singh and Singh
5. B.B. Laud (Statistical Mechanics)
6. F. Reif (Statistical Mechanics)
Dilectrics
7. Bhattacharyya [Engineering Physics] Oxford

Solid Mechanics Lab
Code:CE391 Contact – 3
P Credits – 2

1. Tension test on Structural Materials: Mild Steel and Tor steel (HYSD bars)
2. Compression Test on Structural Materials: Timber, bricks and concrete cubes
3. Bending Test on Mild Steel
4. Torsion Test on Mild Steel Circular Bar
5. Hardness Tests on Ferrous and Non-Ferrous Metals: Brinnel and Rockwell Tests
6. Test on closely coiled helical spring
7. Impact Test: Izod and Charpy
8. Demonstration of Fatigue Test

Surveying Practice I
Code:CE392 Contact-
3P
Credits -2

Chain surveying
Preparing index plans, Location sketches, Ranging, Preparation of map, Heights of objects using chain and ranging rods, Getting outline of the structures by enclosing them in triangles/quadrilaterals, Distance between inaccessible points, Obstacles in chain survey.

Compass surveying
Measurement of bearings, Preparation of map, Distance between two inaccessible points by chain and compass, Chain and compass traverse

Plane Table survey
Temporary adjustments of plane table and Radiation method, Intersection, Traversing and Resection methods of plane tabling, Three-point problem

Leveling
Temporary adjustment of Dumpy level, Differential leveling, Profile leveling and plotting the profile, Longitudinal and cross sectioning, Gradient of line and setting out grades, Sensitiveness of Bubble tube

Contouring
Direct contouring, Indirect contouring – Block leveling, Indirect contouring – Radial contouring, Demonstration of minor instruments

Building Design and Drawing
Code:CE 393
Contact- 3P
Credits: 2;

Foundations
Spread foundation for walls and columns; Footing for a RCC column, raft and pile foundations;

Doors and Windows
Glazed and paneled doors of standard sizes; Glazed and paneled windows of standard sizes; special windows and ventilators

Stairs
Proportioning and design of a dog-legged, open well RCC stair case for an office / Residential building; Details of reinforcements for RCC stair cases; Plan and elevation of straight run, quarter turn, dog-legged and open well stair cases.

Roofs and Trusses
Types of sloping roof, lean-to roofs, RCC roof with details of reinforcements, King post and Queen post trusses.

Functional Design of Buildings
To draw the line diagram, plan, elevation and section of the following:

Residential Buildings (flat, pitched and combined roofs), Office Buildings (flat roof), School The

designs must show positions of various components including lift well and their sizes.

Introduction to drawing by using software package
References

Sl No.	Title	Author
1	Principles of Building Drawing	Shah & Kale
2	Text Book of Building Construction	Sharma & Kaul
3	Building Construction	B C Punmia

Syllabus for B.Tech(Civil Engineering) Up to Third Year

Semester: IV

NUMERICAL METHODS
Code: M (CS) 401
Contacts: 2L+1T
Credits: 2

Approximation in numerical computation: Truncation and rounding errors, Fixed and floating-point arithmetic, Propagation of errors. (4)

Interpolation: Newton forward/backward interpolation, Lagrange's and Newton's divided difference Interpolation. (5)

Numerical integration: Trapezoidal rule, Simpson's 1/3 rule, Expression for corresponding error terms. (3)

Numerical solution of a system of linear equations:
Gauss elimination method, Matrix inversion, LU Factorization method, Gauss-Seidel iterative method. (6)

Numerical solution of Algebraic equation:
Bisection method, Regula-Falsi method, Newton-Raphson method.

(4)

Numerical solution of ordinary differential equation: Euler's method, Runge-Kutta methods, Predictor-Corrector methods and Finite Difference method. (6)

Text Books:

1. C.Xavier: C Language and Numerical Methods.
2. Dutta & Jana: Introductory Numerical Analysis.
3. J.B.Scarborough: Numerical Mathematical Analysis.
4. Jain, Iyengar , & Jain: Numerical Methods (Problems and Solution).

References:

1. Balagurusamy: Numerical Methods, Scitech.
2. Baburam: Numerical Methods, Pearson Education.
3. N. Dutta: Computer Programming & Numerical Analysis, Universities Press.
4. Soumen Guha & Rajesh Srivastava: Numerical Methods, OUP.
5. Srimanta Pal: Numerical Methods, OUP.

Subject Name : MATHEMATICS

Code: M 402

Contacts: 3L +1T = 4

Credits: 4

Note 1: The entire syllabus has been divided into four modules. Note 2: Structure of Question Paper

There will be two groups in the paper:

Group A: Ten questions, each of 2 marks, are to be answered out of a total of 15 questions, covering the entire syllabus.

Group B: Five questions, each carrying 10 marks, are to be answered out of (at least) 8 questions.
Students should answer at least one question from each module.
[At least 2 questions should be set from each of Modules II & IV.
At least 1 question should be set from each of Modules I & III. Sufficient questions should be set covering the whole syllabus for alternatives.]

Module I: Fourier Series & Fourier Transform [8L]
Topic: Fourier Series:
Sub-Topics: Introduction, Periodic functions: Properties, Even & Odd functions: Properties, Special wave forms: Square wave, Half wave Rectifier, Full wave Rectifier, Saw-toothed wave, Triangular wave.

(1)

Syllabus for B.Tech(Civil Engineering) Up to Third Year

Euler’s Formulae for Fourier series, Fourier series for functions of period 2l, Fourier series for functions of period 2l, Dirichlet’s conditions, Sum of Fourier series. Examples. (1)

Theorem for the convergence of Fourier Series (statement only). Fourier Series of a function with its periodic extension. Half Range Fourier Series: Construction of Half range Sine Series, Construction of Half range Cosine Series. Parseval's identity (statement only). Examples. (2)

Topic: Fourier Transform:

Sub-Topics: Fourier Integral Theorem (statement only), Fourier Transform of a function, Fourier Sine and Cosine Integral Theorem (statement only), Fourier Cosine & Sine Transforms. Fourier, Fourier Cosine & Sine Transforms of elementary functions. (1)

Properties of Fourier Transform: Linearity, Shifting, Change of scale, Modulation. Examples. Fourier Transform of Derivatives. Examples. (1)

Convolution Theorem (statement only), Inverse of Fourier Transform, Examples. (2)

Module II : Calculus of Complex Variable [13L]

Topic: Introduction to Functions of a Complex Variable.

Sub-Topics: Complex functions, Concept of Limit, Continuity and Differentiability. (1)

Analytic functions, Cauchy-Riemann Equations (statement only). Sufficient condition for a function to be analytic. Harmonic function and Conjugate Harmonic function, related problems. (1)

Construction of Analytic functions: Milne Thomson method, related problems**.** (1)

Topic: Complex Integration.

Sub-Topics: Concept of simple curve, closed curve, smooth curve & contour. Some elementary properties of complex Integrals. Line integrals along a piecewise smooth curve. Examples. (2)

Cauchy's theorem (statement only). Cauchy-Goursat theorem (statement only). Examples. (1)

Cauchy's integral formula, Cauchy's integral formula for the derivative of an analytic function, Cauchy's integral formula for the successive derivatives of an analytic function. Examples. (2)

Taylor's series, Laurent's series. Examples (1)

Topic: Zeros and Singularities of an Analytic Function & Residue Theorem.

Sub-Topics: Zero of an Analytic function, order of zero, Singularities of an analytic function. Isolated and non-isolated singularity, essential singularities. Poles: simple pole, pole of order m.
Examples on determination of singularities and their nature. (1)

Residue, Cauchy's Residue theorem (statement only), problems on finding the residue of a given function, evaluation of definite integrals: $\int_0^{\infty} \sin x \, dx$, $\int_0^{2\pi} \frac{d\theta}{a + b\cos\theta + c\sin\theta}$, $\square\!\!\int \frac{P(z)}{Q(z)}\, dz$ (elementary cases, P(z) & Q(z) are polynomials of 2nd order or less). (2)

Topic: Introduction to Conformal Mapping.

Sub-Topics: Concept of transformation from z-plane to w-plane. Concept of Conformal Mapping. Idea of some standard transformations. Bilinear Transformation and determination of its fixed point. (1)

Module III: Probability [8L] Topic:
Basic Probability Theory
Sub-Topics: Classical definition and its limitations. Axiomatic definition.
Some elementary deduction: i) P(O)=0, ii) $0 \leq P(A) \leq 1$, iii) P(A')=1−P(A) etc. where the symbols have their usual meanings. Frequency interpretation of probability. (1)

Addition rule for 2 events (proof) & its extension to more than 2 events (statement only). Related problems.
Conditional probability & Independent events. Extension to more than 2 events (pairwise & mutual independence). Multiplication Rule. Examples. Baye's theorem (statement only) and related problems. (3)

Topic: Random Variable & Probability Distributions. Expectation.
Sub-Topics: Definition of random variable. Continuous and discrete random variables. Probability density function & probability mass function for single variable only. Distribution function and its properties (without proof). Examples. Definitions of Expectation & Variance, properties & examples. (2)

Some important discrete distributions: Binomial & Poisson distributions and related problems.
Some important continuous distributions: Uniform, Exponential, Normal distributions and related problems. Determination of Mean & Variance for Binomial, Poisson & Uniform distributions only.
(2)

Module IV: Partial Differential Equation (PDE) and Series solution of Ordinary Differential Equation (ODE) [13L]

Topic: Basic concepts of PDE.
Sub-Topics: Origin of PDE, its order and degree, concept of solution in PDE. Introduction to different methods of solution: Separation of variables, Laplace & Fourier transform methods. (1)

Topic: Solution of Initial Value & Boundary Value PDE's by Separation of variables, Laplace & Fourier transform methods.

Sub-Topics:
PDE I: One dimensional Wave equation. (2)
PDE II: One dimensional Heat equation. (2)
PDE III: Two dimensional Laplace equation. (2)

Topic: Introduction to series solution of ODE.

Sub-Topics: Validity of the series solution of an ordinary differential equation.
General method to solve $P_o\, y''+P_1\, y'+P_2\, y=0$ and related problems. (2)
Topic: Bessel's equation.

Sub-Topics: Series solution, Bessel function, recurrence relations of Bessel's Function of first kind. (2)
Topic: Legendre's equation.
Sub-Topics: Series solution, Legendre function, recurrence relations and orthogonality relation. (2)

TOTAL LECTURES : 42

Text Books:

2. Brown J.W and Churchill R.V: Complex Variables and Applications, McGraw-Hill.
3. Das N.G.: Statistical Methods, TMH.
4. Grewal B S: Higher Engineering Mathematics, Khanna Publishers.
5. James G.: Advanced Modern Engineering Mathematics, Pearson Education.
6. Lipschutz S., and Lipson M.L.: Probability (Schaum's Outline Series), TMH.

References:

1. Bhamra K. S.: Partial Differential Equations: An introductory treatment with applications, PHI
2. Dutta Debashis: Textbook of Engineering Mathematics, New Age International Publishers.
3. Kreyzig E.: Advanced Engineering Mathematics, John Wiley and Sons.
4. Potter M.C, Goldberg J.L and Aboufadel E.F.: Advanced Engineering Mathematics, OUP.
5. Ramana B.V.: Higher Engineering Mathematics, TMH.
6. Spiegel M.R. , Lipschutz S., John J.S., and Spellman D., : Complex Variables, TMH.

Fluid Mechanics
Code:CE401
Contact: 3L

Syllabus for B.Tech(Civil Engineering) Up to Third Year

Credits: 3

Sl. No	Details of Course Content	Hours	Total
1	Fluid statics: Forces on plane and curved surfaces, Center of pressure. Stability of floating bodies, Metacentre..	4	42
2	**Weirs and Notches:** Rectangular, triangular, Cippoletti, sharp crested and broad crested weirs, submerged weirs	3	
3	**Turbulent flow in circular pipes:** Fluid friction in pipes, head loss due to friction. Darcy-Weisbach equation, Variation of friction factor with wall roughness – Moody's chart. Minor losses in pipes	5	
4	**Water Hammer:** Speed of pressure wave, slow and rapid closure, use of surge tank.	3	
5	**Steady uniform flow in open channel:** Characteristics, Chezy's, Manning's and Bazin's formulae. Hydraulically efficient cross sections. Flow through channels of circular cross sections – depths for maximum velocity and discharge.	5	
6	Varied flow through open channel: Gradually varied and rapidly varied flows. Definition, Specific Energy, Critical, Sub-critical and Super-critical flows. Channel transitions - constricted or raised bed. Establishment of critical flow, Venturi flume and Parshall flume. Definition and diagram for Specific force, Hydraulic Jump	10	
7	Dimensional Analysis and Model studies: Dimensions and dimensional homogeneity, Importance and use of dimensional analysis. Buckingham's Pi theorem with applications. Geometric, Kinematic and Dynamic similarity. Non Dimensional Numbers.	4	
8	**Introduction to Hydraulic Turbines:** Working Principles of Pelton, Francis and Kaplan turbines	3	
9	**Pumps:** Centrifugal pumps, performance characteristic graph – design flow rate. Working principles of positive displacement pumps, gear, reciprocating and vane pumps. Hydraulic Ram	5	

References

Sl. No	Name	Author	Publishers
1	Fluid Mechanics	Modi & Seth	Standard Book House, New Delhi
2	Fluid Mechanics	A.K.Jain	Khanna Publishers, New Delhi
3	Fluid Mechanics & Machinery	H. M. Raghunath	CBS Publishers, New Delhi
4	Fluid Mechanics and Fluid Machines	S. K. Som & G. Biswas	Tata McGraw Hill.
5	Fluid Mechanics, Hydraulics and Fluid Machines	S. Ramamrutham	Dhanpat Rai
6	Basic Fluid Mechanics	C. P. Kothandaraman & R. Rudramoorthy	New Age International
7	Open Channel Hydraulics	Van te Chow	McGraw Hill
8	Fluid Mechanics	John F. Douglas, Gasiorek & Swaffield,	Pearson Education
9	Introduction to Fluid Mechanics	Fox, Pritchand	
10	Fundamental of Fluid Mechanics	Munsen, Young	WIE

STRUCTURAL ANALYSIS
Code: CE402
Contact: 3L + 1 T
Credits: 4

Sl. No	Details of Course Content	Hours	Total

1	Review of basic concept of mechanics: Equilibrium, Free body diagram, Determinate and Indeterminate structures, Degree of indeterminacy for different types of structures: Beams, Frames, Trusses	4	
2	**Analysis of determinate structures**: Portal frames, arches, cables	4	
3	**Strain energy**: Due to axial load, bending and shear, Torsion; Castigliano's theorems, theorem of minimum potential energy, principle of virtual work, Maxwell's theorem of reciprocal deflection, Betti's law	4	
4	**Deflection determinate structures:** Moment area and Conjugate beam method, Energy methods, Unit load method for beams, Deflection of trusses and simple portal frames.	8	

6	**Influence line diagrams**: Statically determinate beams and trusses under series of concentrated and uniformly distributed rolling loads, criteria for maximum and absolute maximum moments and shears.	6	42
6	Analysis of statically Indeterminate beams: Theorem of three moments, Energy methods, Force method (method of consistent deformations) [for analysis of propped cantilever, fixed beams and continuous beams (maximum two degree of indeterminacy) for simple loading cases], Analysis of two-hinged arch.	8	
7	Analysis of statically Indeterminate structures: Moment distribution method - solution of continuous beam, effect of settlement and rotation of support, frames with or without side sway. Slope Deflection Method – Method and application in continuous beams and Frames. Approximate method of analysis of structures: Portal & Cantilever methods	8	

References

Sl. No	Name	Author	Publishers
1	Engineering Mechanics of Solids	By E. P. Popov	Pearson Education
2	Basic structural Analysis	C.S. Reddy	TMH
3	Statically indeterminate structures	C. K. Wang	McGraw-Hill
4	Elastic analysis of structures	Kennedy and Madugula	Harper and Row
5	Structural Analysis (Vol I & Vol II)	S S Bhavikatti	Vikas Publishing House Pvt. Ltd
6	Structural Analysis	Ramammurtham	
7	Structures	Schodek & M. Bechhold	Pearson Education

SOIL MECHANICS
Code:CE403
CONTACT-3L+1T
CREDITS-4

Sl. No	**Details of Course Content**	Hours	Total
1	Introduction: Origin & formation of Soil: Types, Typical Indian Soil, Fundamental of Soil Structure, Clay Mineralogy	2	42
2	**Physical & Index properties of soil**: Weight- Volume Relationships, Insitu Density, Moisture Content, Specific Gravity, Relative Density, Atterberg's Limits, Soil Indices, consistency of soil , Particle Size Distribution of soil: Sieving, Sedimentation Analysis	6	
3	**Identification & Classification of soil**: Field identification of soil, Soil Classification: as per Unified Classification System, IS Code Recommendation, AASHTO Classification	4	
4	**Flow through soil:** Darcy's Law, Coefficient of permeability, laboratory and field determination of coefficient of permeability, Permeability for Stratified Deposits, Laplace's Equations, Flow nets, Flow Through Earthen Dam, Estimation of Seepage, Uplift due to seepage	6	
5	**Effective Stress Principles**: Effective Stress, Effective pressure due to different conditions, Seepage force, Critical hydraulic gradient, Quick sand condition, Design of filters, Capillarity in soil	4	
6	Stress Distribution In Soil: Normal and shear stresses, Stress due to point loads, Stress beneath Line, strip & uniformly loaded circular area & rectangular area, pressure bulbs, Newmark's charts- Use for determination of stress due to arbitrarily loaded areas b	4	
7	Compaction of soil: Principles of Compaction, IS Light & Heavy Compaction Test, Field Compaction, Various methods of field compaction and control	4	
8	**Compressibility & Consolidation of Soil**: Terzaghi's theory of one dimensional consolidation, Compressibility characteristics of soils: Compression index, Coefficient of compressibility & volume change, Coefficient of consolidation, Degree & rate of consolidation, Laboratory method of one dimensional consolidation test, Determination of consolidation parameters, Secondary consolidation	6	

9	**Shear Strength of Soil**: Basic concepts, Mohr- Columb's Theory, Laboratory Determination of soil shear parameter- Direct Shear, Tri-axial Test, Unconfined Compression, Vane Shear Test, Sensitivity & thixotropy of clay.	6

References

Sl.	Name	Author	Publishers

No			
1	Principles of Geotechnical Engineering	B. M. Das	Thomson Book Store
2	Text book of Soil Mechanics & Foundation Engineering	V.N.S. Murthy	CBS Publisher's & Distributors
3	Geotechnical Engineering – Principles and Practice	Coduto	Pearson Education
4	Soil Mechanics	Lambe & Whitman.	WIE
5	Basic & Applied Soil Mechanics	Gopal Ranjan & A. S. R. Rao	Willes EasternLtd
6	SP 36 (Part I) Numerical Problems – Geotechnical Engineering	Rao & Venkatramaiah	University Press

Practical

Technical Report Writing & Language Lab Practice Code: HU481
Cr-2

Guidelines for Course Execution:

Objectives of this Course: This course has been designed:

1. **To inculcate a sense of confidence in the students.**
2. **To help them become good communicators both socially and professionally.**
3. **To assist them to enhance their power of Technical Communication.**

Detailed Course Outlines:

A. ***Technical Report Writing*** : 2L+6P

1. Report Types (Organizational / Commercial / Business / Project)
2. Report Format & Organization of Writing Materials
3. Report Writing (Practice Sessions & Workshops)

B. Language Laboratory Practice

I. Introductory Lecture to help the students get a clear idea of Technical Communication & the need of Language Laboratory

Practice Sessions 2L

2. Conversation Practice Sessions: (To be done as real life interactions) 2L+4P

a) Training the students by using Language Lab Device/Recommended Texts/cassettes /cd's to get their Listening Skill & Speaking Skill honed

b) Introducing Role Play & honing over all Communicative Competence

3. Group Discussion Sessions: 2L+6P

a) Teaching Strategies of Group Discussion

b) Introducing Different Models & Topics of Group Discussion

c) Exploring Live /Recorded GD Sessions for mending students' attitude/approach & for taking remedial measure

Interview Sessions; 2L+6P

- ***a) Training students to face Job Interviews confidently and successfully***
- ***b) Arranging Mock Interviews and Practice Sessions for integrating Listening Skill with Speaking Skill in a formal situation for effective communication***

4. Presentation: 2L+6P

- ***a) Teaching Presentation as a skill***
- ***b) Strategies and Standard Practices of Individual /Group Presentation***
- ***c) Media & Means of Presentation: OHP/POWER POINT/ Other Audio-Visual Aids***

5. Competitive Examination: 2L+2P

- ***a) Making the students aware of Provincial /National/International Competitive Examinations***
- ***b) Strategies/Tactics for success in Competitive Examinations***
- ***c) SWOT Analysis and its Application in fixing Target***

Books – Recommended:

Nira Konar: English Language Laboratory: A Comprehensive Manual

PHI Learning, 2011

D. Sudharani: Advanced Manual for Communication Laboratories & Technical Report Writing
Pearson Education (W.B. edition), 2011

References:
Adrian Duff et. al. (ed.): Cambridge Skills for Fluency
A) Speaking (Levels 1-4 Audio Cassettes/Handbooks)
B) Listening (Levels 1-4 Audio Cassettes/Handbooks)
Cambridge University Press 1998
Mark Hancock: English Pronunciation in Use
4 Audio Cassettes/CD'S OUP 2004

NUMERICAL METHODS LAB
Code: M(CS)491
Contact: 2L Cr:1

1. Assignments on Newton forward /backward, Lagrange's interpolation.
2. Assignments on numerical integration using Trapezoidal rule, Simpson's 1/3 rule, Weddle's rule.
3. Assignments on numerical solution of a system of linear equations using Gauss elimination and Gauss-Seidel iterations.
4. Assignments on numerical solution of Algebraic Equation by Regular-falsi and Newton Raphson methods.
5. Assignments on ordinary differential equation: Euler's and Runga-Kutta methods.
6. Introduction to Software Packages: Matlab / Scilab / Labview / Mathematica.

Fluid Mechanics Lab

Code: CE491
Contact- 3P
Credits-2

1. Determination of Orifice co-efficient
2. Calibration of Orifice meter
3. Calibration of V- Notch
4. Measurement of velocity of water in an open channel using a pitot tube
5. Measurement of water surface profile for flow over Broad crested weir
6. Preparation of discharge rating curve for a sluice
7. Measurement of water surface profile for a hydraulic jump
8. Determination of efficiency of a Centrifugal pump
9. Determination of efficiency of a Reciprocating pump
10. Determination of efficiency of a Pelton wheel Turbine
11. Determination of efficiency of a Francis Turbine
12. Determination of efficiency of a Hydraulic Ram

Note: Students will have to study the Layout experimental units in the laboratory

Surveying Practice II
Code:CE492
Contact – 3 P
Credits – 2

1. Traversing by Using Theodolite: Preparation of Gales Table from field data
2. Traversing by using Total Station
3. Use of Total Station for leveling and Contouring
4. Setting out of Simple Curves

Syllabus for B.Tech(Civil Engineering) Up to Third Year

Soil Mechanics Lab. – I
Code:CE493
Contact – 3 P
Credits – 2

1. Field identification of different types of soil as per Indian standards [collection of field samples and identifications without laboratory testing], determination of natural moisture content.
2. Determination of specific gravity of i) Cohesionless ii) cohesive soil
3. Determination of Insitu density by core cutter method & sand replacement method.
4. Grain size distribution of cohessionless soil by sieving & finegrained soil by hydrometer analysis.
5. Determination of Atterberg's limits (liquid limit, plastic limit & shrinkage limit).
6. Determination of co- efficient of permeability by constant head pemeameter (coarse grained soil) & variable head parameter (fine grained soil).
7. Determination of compaction characteristics of soil.

References:

1. Soil Testing by T.W. Lamb (John willey)
2. 2. SP-36 (Part I- & Part – II)
3. Soil Mechanics Laboratory Manual by Braja Mohan Das, OXFORD UNIVERSITY PRESS
4. Measurement of Engineering properties of soil by E Saibaba Reddy & K. Rama Sastri. (New age International publication.

Syllabus for B.Tech(Civil Engineering) Up to Third Year

SEMESTER - V
Theory

Economics for Engineers
HU-501
Contracts: 3L
Credits- 3

Module-I
1. Economic Decisions Making – Overview, Problems, Role, Decision making process.
2. Engineering Costs & Estimation – Fixed, Variable, Marginal & Average Costs, Sunk Costs, Opportunity Costs, Recurring And Nonrecurring Costs, Incremental Costs, Cash Costs vs Book Costs, Life-Cycle Costs; Types Of Estimate, Estimating Models - Per-Unit Model, Segmenting Model, Cost Indexes, Power-Sizing Model, Improvement & Learning Curve, Benefits.

Module-II
3. Cash Flow, Interest and Equivalence: Cash Flow – Diagrams, Categories & Computation, Time Value of Money, Debt repayment, Nominal & Effective Interest.
4. Cash Flow & Rate Of Return Analysis – Calculations, Treatment of Salvage Value, Annual Cash Flow Analysis, Analysis Periods; Internal Rate Of Return, Calculating Rate of Return, Incremental Analysis; Best Alternative Choosing An Analysis Method, Future Worth Analysis, Benefit-Cost Ratio Analysis, Sensitivity And Breakeven Analysis. Economic Analysis In The Public Sector - Quantifying And Valuing Benefits & drawbacks.

Module-III
5. Inflation And Price Change – Definition, Effects, Causes, Price Change with Indexes, Types of Index, Composite vs Commodity Indexes, Use of Price Indexes In Engineering Economic Analysis, Cash Flows that inflate at different Rates.
6. Present Worth Analysis: End-Of-Year Convention, Viewpoint Of Economic Analysis Studies, Borrowed Money Viewpoint, Effect Of Inflation & Deflation, Taxes, Economic Criteria, Applying Present Worth Techniques, Multiple Alternatives.
7. Uncertainty In Future Events - Estimates and Their Use in Economic Analysis, Range Of Estimates, Probability, Joint Probability Distributions, Expected Value, Economic Decision Trees, Risk, Risk vs Return, Simulation, Real Options.

Module-IV
8. Depreciation - Basic Aspects, Deterioration & Obsolescence, Depreciation And Expenses, Types Of Property, Depreciation Calculation Fundamentals, Depreciation And Capital Allowance Methods, Straight-Line Depreciation Declining Balance Depreciation, Common Elements Of Tax Regulations For Depreciation And Capital Allowances.
9. Replacement Analysis - Replacement Analysis Decision Map, Minimum Cost Life of a New Asset, Marginal Cost, Minimum Cost Life Problems.
10. Accounting – Function, Balance Sheet, Income Statement, Financial Ratios Capital Transactions, Cost Accounting, Direct and Indirect Costs, Indirect Cost Allocation.

Readings

1. James L.Riggs,David D. Bedworth, Sabah U. Randhawa : Economics for Engineers 4e , Tata McGraw-Hill
2. Donald Newnan, Ted Eschembach, Jerome Lavelle : Engineering Economics Analysis, OUP
3. John A. White, Kenneth E.Case,David B.Pratt : Principle of Engineering Economic Analysis, John Wiley
4. Sullivan and Wicks: Engineering Economy, Pearson
5. R.Paneer Seelvan: Engineering Economics, PHI
6. Michael R Lindeburg : Engineering Economics Analysis, Professional Pub

The hours allotted are lecture hours, the tutorial classes should be held accordingly to contact hours allotted subject wise
FOUNDATION ENGINEERING
Code: CE501
Contact: 3L + 1T
Credits: 4

Sl.No	Details of Course Content	Hours	Total
1	**Earth pressure theories**: Plastic equilibrium of soil, Earth pressure at rest, Active & passive earth pressure, Rankine's & Coulomb's earth pressure theories, wedge method of analysis, estimation of earth pressure by graphical construction (Culmann Method).	4	
2	**Retaining wall & sheet pile structures**: Proportions of retaining walls, stability checks, cantilever and anchored sheet piles, free earth and fixed earth method of analysis of anchored bulk heads	6	
	Stability of slopes: Analysis of finite and infinite slopes, Swedish And friction circle		

3	method, Taylor's stability number, Bishop's method of stability analysis	4	36 + 12 for tutorial
4	**Site investigation & soil exploration**: Planning of sub-surface exploration, methods, sampling, samples, Insitu tests: SPT, SCPT, DCPT, Field vane shear, Plate load test	6	
5	**Shallow foundations** : Safe bearing capacity, Terzaghi's bearing capacity theory, effect of depth of embedment, water table, eccentricity of load, foundation shape on bearing capacity, Bearing capacity as per 1S 6403.	6	
6	**Settlement analysis of shallow foundation**: Immediate and consolidation settlement, correction for rigidity and dimensional effects, settlement in various types of soil, IS-1904 and 8009 recommendations, Allowable bearing capacity	4	
7	**Deep foundations**: Pile: Types, load transfer mechanism, Determination of load carrying capacities of piles by static and Dynamic formulae, Recommendations of IS 2911, Pile group: Group efficiency, Negative skin friction, pile load test	6	

Text & References

Sl. No	Name	Author	Publishers
1	Principles of Geotechnical Engineering	B.M. Das	Thomson
2	Principles of soil Mechanics & Foundation Engineering	VNS Moorthy	UBS Publication
3	Principles of Foundation Engineering	B.M. Das	Thomson
4	Foundation Analysis & Design	J.E. Bowels	Mc Graw Hill
5	Basic & Applied Soil Mechanics	Gopal Ranjan & A.S.R. Rao	Wiley Eastern Ltd
6	SP-36 (Part-I & Part-II)		
7	Relevant latest IS Codes (IS 6403, IS 1904, IS 8009, IS 2911)	Bureau of Indian Standard	

DESIGN OF RC STRUCTURES
Code: CE502
Contact: 3L + 1T
Credits: 4

Sl.No	Details of Course Content	Hours	Total
1	Introduction: Principles of design of reinforced concrete members - Working stress and Limit State method of design	2	36 + 12 for tutorial
2	Working stress method of design: Basic concepts and IS code provisions (IS: 456 2000)for design against bending moment and shear forces - Balanced, under reinforced and over-reinforced beam/ slab sections; design of singly and doubly reinforced sections	5	
3	Limit state method of design: Basic concepts and IS code provisions (IS: 456 2000) for design against bending moment and shear forces; concepts of bond stress and development length; Use of 'design aids for reinforced concrete' (SP:16).	5	
4	Analysis, design and detailing of singly reinforced rectangular, 'T', 'L' and doubly reinforced beam sections by limit state method.	5	
5	Design and detailing of one-way and two-way slab panels as per IS code provisions	6	
6	Design and detailing of continuous beams and slabs as per IS code provisions	3	
7	Staircases: Types; Design and detailing of reinforced concrete doglegged staircase	3	
8	Design and detailing of reinforced concrete short columns of rectangular and circular cross-sections under axial load. Design of short columns subjected to axial load with moments (uniaxial and biaxial bending) – using SP 16.	3	
9	Shallow foundations: Types; Design and detailing of reinforced concrete isolated square and rectangular footing for columns as per IS code provisions by limit state method	4	

- **Limit state method should be followed for serial number 4 to 9 as above as per IS 456 - 2000**

Text & References

Sl. No	Name	Au
	thor	
	blishers	Pu

1	IS: 456- 2000 “Indian Standard for Plain and reinforced concrete – code of practice”	Bureau of Indian Standard
2	SP:16 Design Aid to IS 456	

3	Reinforced Concrete Design by	Pillai and Menon	TMH
4	Reinforced concrete Limit state design	Ashok K. Jain	
5	Reinforced concrete	S.N.Sinha	TMH
6	Fundamentals of reinforced concrete	N.C.Sinha and S.K. Roy	S.Chand &Co
7.	Limit State Design of Reinforced Concrete	P. C. Varghese	PHI
8.	Reinforced Concrete	S. K. Mallick and A. P. Gupta	Oxford IBH

CONCRETE TECHNOLOGY
Code: CE503
Contact: 3L
Credits: 3

Sl.No	Details of Course Content	Hours	Total
1	Concrete as a Structural Material, Chemical Composition of Cement, Hydration of Cement, Heat of Hydration and Strength, Tests on Cement and Cement Paste – fineness, consistency, setting time, soundness, strength Quality of Water – Mixing Water, Curing Water, Harmful Contents	6	36
2	Types of Portland Cement – ordinary, Rapid hardening, low-heat, sulphate resisting, Portland slag, Portland pozzolana, super sulphated cement, white cement	4	
3	Aggregates – Classification, Mechanical and Physical Properties, Deleterious Substances, Alkali-Aggregate Reaction, Sieve Analysis, Grading Curves, Fineness modules, Grading Requirements. Testing of Aggregates – Flakiness, Elongation Tests, Aggregate Crushing Value, Ten Percent Fines Value, Impact Value, Abrasion Value	8	
4	Properties of Fresh Concrete – Workability, Factors Affecting Workability, Slump Test Compacting Factor Test, Flow Table Test, Segregation, Bleeding, Setting Time, Mixing and Vibration of Concrete, Mixers and Vibrators, Curing methods, Maturity.	6	
5	Strength of Concrete – Water/Cement ratio, Gel/Space ratio, Strength in Tension, Compression, Effect of Age on Strength, Relation between Compressive and Tensile Strength, Fatigue Strength, Stress Strain Relation and Modulus of Elasticity, Poisson's Ratio, Shrinkage and Creep, Compression Test on Cubes, Cylinders, Introduction to Non-Destructive Tests (Rebound hammer & Ultrasonic pulse velocity)	6	
6	Admixtures – different types, effects, uses, Retarders and Super plasticizers. Mix Design by I.S. 20262 (2009). Light-weight, Polymer and Fibre-reinforced concrete	6	

Text & References

Sl. No	Name	Author	Publishers
1	Concrete Technology	Neville	Pearson Education
2	Concrete Technology	M.S. Shetty	S.Chand
3	Concrete Technology	A. R. Santakumar	OXFORD University Press
4	Concrete Technology	M.L. Gambhir	Tata McGraw Hill
5	Text book of Concrete Technology	P.D. Kulkarni	Tata McGraw Hill

Syllabus for B.Tech(Civil Engineering) Up to Third Year

Engineering Geology

Syllabus for B.Tech(Civil Engineering) Up to Third Year

CE-504
Contracts: 3L
Credits- 3

Module no.	Topic	Hrs
1.	Geology and its importance in Civil Engineering.	22
2.	Mineralogy: Definition, internal and external structure of minerals, study of crystals, Classification and physical properties of minerals.	3
3.	Classification of rocks: Igneous rocks: Origin, mode of occurrence, forms & texture, classification and engineering importance. Sedimentary rocks: Process of sedimentation, classification and engineering importance. Metamorphic rocks: Agents and types of metamorphism, classification and engineering importance.	44
4.	Weathering of rocks: Agents and kinds of weathering, soil formation & classification based on origin.	2
5.	Geological work of rivers: Origin and stages in the system, erosion, transportation and deposition.	1
6.	Structural geology: Introduction to structural elements of rocks, dip & strike, definition, description, classification of folds, faults and joints, importance of geological structures in Civil Engineering.	4
7.	Earthquakes and seismic hazards: Causes and effects, seismic waves and seismographs, Mercelli's intensity scale and Richter's scale of magnitude.	3
8.	Engineering properties of rocks: Porosity, permeability, compressive strength, tensile strength and abrasive resistance.	3
9.	Rocks as construction materials: Qualities required for building and ornamental stones, foundations, concrete aggregate, railway ballast, road metal, pavement, flooring and roofing.	3
10.	Geophysical exploration: Methods of Geophysical Exploration, electrical resistivity method field procedure – sounding and profiling, electrode configuration, and interpretation of resistivity data. Geophysical surveys in ground water and other Civil Engg. Projects.	4
11.	Applied Geology: Surface and subsurface geological and geophysical investigations in major Civil Engg. Projects. Geological studies of Dams and reservoir sites, Geological studies for selection of tunnels and underground excavations.	4
12.	Landslides: Types of landslides, causes, effects and prevention of landslides.	3

Text & References

Sl. No	Name	Author	Publishers
1	Engineering and General Geology	Parvin Singh	Katson publishing house Delhi 1987
2	Engineering Geology for Civil Engineers	D. Venkat Reddy,	Oxford, IBH, 1995.
3	Principles of petrology	Tyrell	Asia, Bombay
4	Structural Geology	Marland P. Billings	Wiley eastern Prentice-Hall, U.S.A.
5	Ground Water hydrology	Todd D.K.	John Wiley & Sons, Second edition, 1980.

Syllabus for B.Tech(Civil Engineering) Up to Third Year

Practical

Soil Mechanics Lab.-II
Code-CE591
Contact: 3P
Credit –2

Determination of compressibility characteristics of soil by Oedometer test (co-efficient of consolidation & compression Index)
Determination of unconfined compressive strength of soil Determination of Shear parameter of soil by Direct shear test Determination of undrained shear strength of soil by Vane shear test. Determination of shear parameter of soil by Triaxial test (UU) Standard Penetration Test
Expt No. 6 by large groups in the field.

References

1. Soil testing by T.W. Lamb (John Willey)
2. SP-36 (Part-I & Part –II)
3. Soil Mechanics Laboratory Manual by B. M. Das, OXFORD UNIVERSITY PRESS
4. Measurement of engineering properties of soil by E.Jaibaba Reddy & K. Ramasastri.

CONCRETE LABORATORY

Code CE 592
Contact: 3P
Credits: 2

1. Tests on cement – specific gravity, fineness, soundness, normal consistency, setting time, compressive strength on cement mortar cubes
2. Tests on fine aggregate – specific gravity, bulking, sieve analysis, fineness modules, moisture content , bulk density and deleterious materials.
3. Tests on coarse aggregate - specific gravity, sieve analysis, fineness modulus, bulk density.
4. Tests on Fresh Concrete: Workability : Slump, Vee-Bee, Compaction factor tests
5. Hardened Concrete: Compressive strength on Cubes, Split tensile strength, Static modulus of elasticity, Flexure tests , Non destructive testing (Rebound hammer & Ultrasonic pulse velocity)
6. Mix Design of Concrete.

References:

1. Relevant latest IS codes on Aggregates, Cement & Concrete [269, 383, 2386, 10262(2009), SP23]
2. Laboratory manual of concrete testing by V.V. Sastry and M. L. Gambhir

Quantity Surveying, Specification and Valuation
Code-CE593
Contact: 3P
Credits- 2

Quantity Surveying: Types of estimates, approximate estimates, items of work, unit of measurement, unit rate of payment.

Quantity estimate of a single storied building

Bar bending schedule.
Details of measurement and calculation of quantities with cost, bill of quantities, abstract of quantities.

Estimate of quantities of road, Underground reservoir, Surface drain, Septic tank.

Analysis and schedule of rates: Earthwork, brick flat soling, DPC, PCC and RCC, brick work, plastering, flooring and finishing,
Specification of materials: Brick, cement, fine and coarse aggregates
Specification of works: Plain cement concrete, reinforced cement concrete, first class brickwork, cement plastering, pointing, white washing, colour washing, distempering, lime punning, painting and varnishing

Valuation: Values and cost, gross income, outgoing, net income, scrap value, salvage value, market value, Book Value, sinking fund, capitalised value, Y. P., depreciation, obsolescence, deferred income, freehold and leasehold property, mortgage, rent fixation, valuation table .

References:

1. Estimating, costing, Specification and Valuation in Civil Engineering by M..Chakroborty
2. Estimating and Costing in Civil Engineering" by B.N.Dutta, USB Publishers & Distributers
3. Civil Estimating, Costing and Valuation by Agarwal / Upadhay

Engineering Geology Lab
Code-CE593
Contact: 3P
Credits- 2

Serial No	Experiment on
1.	Study of crystals with the help of crystal models
2.	Identification of Rocks and Minerals [Hand Specimens]
3.	Microscopic study of Rocks and minerals
4.	Study of Geological maps, interpretation of geological structures Thickness problems, Bore-hole Problems

Syllabus for B.Tech(Civil Engineering) Up to Third Year

SEMESTER – VI

Theory

Principles of Management
Code: HU601
Contact: 2L
Credits: 2
Module-I

1. Basic concepts of management: Definition – Essence, Functions, Roles, Level.
2. Functions of Management: Planning – Concept, Nature, Types, Analysis, Management by objectives; Organisation Structure – Concept, Structure, Principles, Centralization, Decentralization, Span of Management; Organisational Effectiveness.

Module-II

3. Management and Society – Concept, External Environment, CSR, Corporate Governance, Ethical Standards.
4. People Management – Overview, Job design, Recruitment & Selection, Training & Development, Stress Management.
5. Managerial Competencies – Communication, Motivation, Team Effectiveness, Conflict Management, Creativity, Entrepreneurship.

Module-III

6. Leadership: Concept, Nature, Styles.
7. Decision making: Concept, Nature, Process, Tools & techniques.
8. Economic, Financial & Quantitative Analysis – Production, Markets, National Income Accounting, Financial Function & Goals, Financial Statement & Ratio Analysis, Quantitative Methods – Statistical Interference, Forecasting, Regression Analysis, Statistical Quality Control.

Module-IV

9. Customer Management – Market Planning & Research, Marketing Mix, Advertising & Brand Management.
10. Operations & Technology Management – Production & Operations Management, Logistics & Supply Chain Management, TQM, Kaizen & Six Sigma, MIS.

Readings:

1. Management: Principles, Processes & Practices – Bhat, A & Kumar, A (OUP).
2. Essentials for Management – Koontz, Revised edition, Tata McGraw Hill (TMH)
3. Management – Stoner, James A. F. (Pearson)
4.Management - Ghuman, Tata McGraw Hill(TMH)

Highway & Transportation Engineering
Code: CE601
Contact: 3L
Credits: 3

Sl.No	Details of Course Content	Hours	Total
1	**Introduction to Highway Engineering**: Scope of highway engineering; Jayakar Committee Report; saturation system; highway financing ('pay as you go method and credit financing method) and highway economics (quantifiable and non quantifiable benefits to highway users, cost of vehicle operation, annual cost method, and benefit-cost ratio method)	2	36
2	**Highway Alignment: Requirements**: factors controlling alignment; engineering surveys for highway alignment and location.	2	
3	**Highway Geometric Design**: Cross-sectional elements; design speed, passing and non-passing sight distances; PIEV theory, requirements and design principles of horizontal alignment including radius of curvature, super elevation, extra-widening, design of transition curves, curve resistance, set back distance, grade compensation and vertical alignment.	12	

4	**Pavement design**: Evaluation of soil subgrade, sub-base, base and wearing courses; design factors for pavement thickness (including design wheel load and ESWL, strength of pavement materials and plate load tests, and effect of climatic variations) Group Index and CBR, IRC method of flexible pavement design; Westergaards analysis of wheel load stresses in rigid pavements; frictional stresses and warping stresses; IRC recommendations for design of rigid pavements;	8	

	design of expansion and contraction joints. Benkelmen Beam Test, Fialure of flexible and rigid pavements.		
5	**Pavement construction Technique**: Types of pavement; construction of earth roads, gravel roads, WBM, bitumen and cement concrete roads; joints in cement concrete pavements.	4	
6	**Traffic Engineering**: Traffic characteristics, theory of traffic flow, intersection design, traffic sign and signal design, highway capacity	8	
7	**Road Materials and Testing** : Soil, Stone Aggregate, Bitumen, Marshal Stability Test	**	

**** To be covered in CE 691 (Highway and Transportation Engineering Lab) Text & References**

Sl.No	Name	Author	Publishers
1	High Way Engineering	Khanna& Justo	Nemchand& Brothers, Roorkee
2	Principles of Transportation Engineering P. Chakraborty& A. Das	PHI	
3	Transportation Engineering-	C. J Khisty& B. K Lall.	
4	I.S Specifications on Concrete , Aggregate & Bitumen Bureau of Indian Standard		
5	Relevant latest IRC Codes (IRC-37 – 2001, IRC 58 – 2002, IRC 73 - 1980, IRC 86 - - 1983, IRC 106 – 1990, IRC 64 – 1990, IRC 15- 2002	Indian Road Congress	

Design of Steel structure
Code: CE602
Contact: 3L
Credits: 3

Sl. No	**Details of Course Content**	Hours	Total
1	Materials and Specification :-Rolled steel section, types of structural steel , specifications	2	

2	Structure connections: Riveted, welded and bolted including High strength friction grip bolted joints. – types of riveted & bolted joints, assumptions, failure of joints, efficiency of joints, design of bolted ,riveted & welded joints for axial load. ii) Eccentric connection:- Riveted & bolted joints subjected to torsion & shear, tension & shear, design of riveted, bolted & welded connection.	8	36
3	Tension members: Design of tension members, I.S code provisions. Permissible stresses, Design rules, Examples.	3	
4	Compression members: Effective lengths about major & minor principal axes, I.S code provisions. Permissible stresses, Design rules, Design of one component, two components and built up compression members under axial load. Examples. Built up columns under eccentric loading: Design of lacing and batten plates, Different types of Column Bases- Slab Base , Gusseted Base, Connection details	8	
5	Beams: Permissible stresses in bending, compression and tension. Design of rolled steel sections, plated beams. simple Beam end connections, beam -Column connections. I.S code provisions	4	
6	Plate girders: Design of webs & flanges, Concepts of curtailment of flanges – Riveted & welded web stiffeners, web flange splices - Riveted, welded& bolted.	6	
7	Gantry Girder: Design gantry girder considering lateral buckling – I.S code provisions.	5	

Text & References:

		Sl. No	Name	Author Publishers
1	Design of Steel structures	N. Subramanian	Oxford University Press	
2	Design Of Steel Structures -	S.K.Duggal	Tata Mc-Graw Hill , New Delhi New Delhi	
3	Design of steel structures	A.S.Arya and J.L.Ajmani	Nemchand& Bros.,	

4	Design of steel structures, Vol. I & II	Ramachandra	
5	Design of steel structures	PasalaDayaratnam –	A.H.Wheeler& Co Ltd. 1990
6	Design of steel structures	B.S.Krishna machar and D.AjithaSinha –	Tata McGraw – Hill publishing Co. Delhi.
7	Design of steel structures	Ramamurtham	
8	IS 800 – 2007(Latest Revised code)	Bureau of Indian Standard	
9	S.P.: 6(1) – 1964 Structural Steel Sections		Bureau of Indian Standard

Construction Planning &Management
Code :–CE603
Contact : 3L
Credits : 3

Sl. No	Details of Course Content	Hours	Total
1	**Planning**: General consideration, Definition of aspect, prospect, roominess, grouping, circulation privacy, acclusion	2	36
2	**Regulation and Bye laws** : Bye Laws in respect of side space, Back and front space, Covered areas, height of building etc., Lavatory blocks , ventilation, Requirements for stairs, lifts in public assembly building, offices	4	
3	**Fire Protection**: Fire fighting arrangements in public assembly buildings, planning , offices, auditorium	2	
4	**Construction plants & Equipment**: Plants & equipment for earth moving, road constructions, excavators, dozers, scrapers, spreaders, rollers, their uses. Plants &Equipment for concrete construction: Batching plants, Ready Mix Concrete, concrete mixers, Vibrators etc., quality control	8	
5	**Planning &Scheduling of constructions Projects:** Planning by CPM &PERT,Preparation of network, Determination of slacks or floats. Critical activities. Critical path, project duration .expected mean time , probability of completion of project, Estimation of critical path, problems.	8	
6	**Management**: Professional practice, Defination, Rights and responsibilities of owner, engineer, Contractors, types of contract	4	
7	**Departmental Procedures:** Administration, Technical and financial sanction, operation of PWD, Tenders and its notification, EMD and SD, Acceptance of tenders, Arbritation	8	

*** Serial 1, 2, 3 are as per National Building Code**
Text & References:

Sl. No	Name	Author Publishers
1	Construction Planning, Equipments and methods	Puerifoy, R.L.	McGraw Hill.
2	Management in construction industry	P.P.Dharwadkar	Oxford and IBH Publishing company New Delhi
3	Construction Management, Critical path Methods in Construction,	J.O.Brien	Wiley Interscience
4	PERT and CPM	L.S. Srinath	
5	Project planning and control with PERT and CPM'		Construction equipments and its management

6	National Building code	BIS	B. C. Punmia and K. K. K and S. C. Sharma

Syllabus for B.Tech(Civil Engineering) Up to Third Year

Professional Elective

Bridge Engineering
Code : CE 604A
Contact : 3L
Credits :3

Sl. No	Details of Course Content	Hours	Total
1	**Introduction, -** Definition and Basic Forms, Component of bridge, classification of bridge, short history of bridge development. I.R.C Loads. Analysis of IRC Loads, Impact factors, Other loads to be considered, Importance of Hydraulic factors in Bridge Design.	4	36
2	**Reinforced concrete solid slab bridge**: Introduction, General design features, Effective width method. Simply supported and cantilever Slab Bridge, analysis and design	8	
3	**Box Culvert:** Introduction, Design method and Design example	2	
4	**Beam and Slab Bridges** Introduction, Design of interior panel of slab. Pigeauds method, Design of longitudinal girder, Calculation of longitudinal moment, design example.	6	
5	**Balanced Cantilever Bridges:** General Features, Arrangement of supports, design features Articulation, Design example.	5	
6	**Steel Bridges:** General features, types of stress, Design example.	3	
7	**Plate Girder Bridge**: Elements, design, lateral bracing, Box- girder Bridges.	3	
8	**Composite Bridges:** General aspects, method of construction, analysis of composite section, shear connectors, design of composite beam.	3	
9	**Cable Stayed Bridge:** General features, Philosophy of design.	2	

References:

Sl. No	Name	Author	Publishers
1	Principle & Practice of Bridge Engineering	S.P. Bindra–	DhanpatRai Pub
2	Essentials of bridge engineering	D.J. Victor	
3	Bridge engineering	Ponnuswamy	
4	Design of Bridge Structures	T.R. Jagadesh, M.A. Jayaram	
5	Bridge engineering	by Krishnaraju	
6	Design of concrete bridges	by Aswani, Vizirani , Ratwani	
7	Design of steel structures	Arya&Ajmani	
8	Concrete Structures	Vaziram&Ratwani	
9	Structures design and drawing	Krishnamurthy	
10	Relevant IS & IRC codes		

Prestressed Concrete
Code : CE604B
Contact :– 3L
Credits :3

Sl. No	Details of Course Content	Hours	Total
1	**Introduction of Prestressed concrete**: Materials, prestressing system, analysis of prestress and bending stress, losses Shear and torsional resistance: design of shear reinforcement, design of reinforcement for torsion shear and bending. Deflections of prestressed concrete members: Importance, factors, short term and long term deflection	7	36
2	**Limit state design criteria**: Inadequacy of elasticand ultimate load method, criteria for limit states, strength and serviceability. Design of sections for flexure: methods by Lin and Magnel	6	
3	**Anchorage Zone stresses in post tensioned members**: Stress distribution in end block, anchorage zone reinforcement	5	
4	**Composite construction of prestressed and in-situ concrete**: Types, analysis of stresses **Statically Indeterminate structures**: advantages of continuous member, effect of prestressing, methods of achieving continuity and method of analysis of secondary moments	8	

5	**Prestressed concrete poles and sleepers**: Design of sections for compression and bending	5	

6	**Partial prestressing and non prestressed reinforcement**	5	

References:

Sl. No	Name	Author	Publishers
1	Prestressed Concrete, Fourth Edition,	N Krishna Raju	McGraw Hill
2	Design of Prestressed Structures,	T.Y.Lin and N.H.Burns,	Wiley Eastern Ltd
3	Fundamentals of Prestressed Concrete,	N.C.Sinha and S.K.Roy	
4	Prestressed Concrete,	S.Ramamurthan	

Structural Dynamics & Earthquake Engineering
Code :CE 604C
Contact : 3L
Credits : 3

Sl. No	Details of Course Content	Hours	Total
1	**Theory of vibrations**: Degrees of freedom, Undamped single degree freedom system, Damped single degree freedom system, Natural frequency, modes of vibration, Introduction to multiple degree freedom system	6	36
2	**Response of single degree freedom system due to harmonic loading**: Undamped harmonic excitation, Damped Harmonic excitation	8	
3	**Response due to Transient loading**: Duhamel's Integral, Response due to constant force, Rectangular load, Introduction to numerical evaluation of Duhamel's integral of undamped system.	6	
4	**Elements of seismology**: Fundamentals: Elastic rebound theory, Plate tectonics, Definitions of magnitude, Intensity, Epicenter etc., Seismographs, Seismic zoning, Response of Simple Structural Systems	4	
5	**Principles of earthquake resistant design**: Terminology, General principles and Design criteria, Methods of Analysis, Equivalent lateral force method of Analysis for multistoried building as per Indian Standard Code of Practice, Introduction to Response Spectrum Method, Fundamental concepts of Ductile detailing	12	

References:

Sl. No	Name	Author	Publishers
1	Structural Dynamics (Theory and Computation)	Mario Paz.	CBS Publishers and Distributor
2	Dynamics of Structure (Theory and Application to Earthquake Engineering)	A.K.Chopra	Pearson Education
3	Elements of Eathquake Engineering	Jai Krishna, A. R. Chandrashekhar and Brijesh Chandra	South Asian Publishers
4	Earthquake Resistant Design	D. J. Dowrick	John Willey & Sons
5	IS 1893 (Part 1): 2002, IS 3920, IS 4326	--------	Bureau of Indian Standard

Operation Research CE605A
Contact: 3L Credits: 3

Free Elective

Module I

Linear Programming Problems (LPP):

Basic LPP and Applications; Various Components of LP Problem Formulation.

Solution of Linear Programming Problems:
Solution of LPP: Using Simultaneous Equations and Graphical Method;
Definitions: Feasible Solution, Basic and non-basic Variables, Basic Feasible Solution, Degenerate and Non-degenerate Solution, Convex set and explanation with examples. **5L**
Solution of LPP by Simplex Method; Charnes' Big-M Method; Duality Theory.Transportation Problems and Assignment Problems. **12L**

Module II

Network Analysis:
Shortest Path: Floyd Algorithm; Maximal Flow Problem (Ford-Fulkerson); PERT-CPM (Cost Analysis, Crashing, Resource Allocation excluded). **6L**

Inventory Control:
Introduction to EOQ Models of Deterministic and Probabilistic ; Safety Stock; Buffer Stock.

3L

Module III

Game Theory:
Introduction; 2-Person Zero-sum Game; Saddle Point; Mini-Max and Maxi-Min Theorems (statement only) and problems; Games without Saddle Point; Graphical Method; Principle of Dominance.

5L

Module IV

Queuing Theory:
Introduction; Basic Definitions and Notations; Axiomatic Derivation of the Arrival & Departure (Poisson Queue). Poisson Queue Models: (M/M/1): (∞ / FIFO) and (M/M/1: N / FIFO) and problems.

5L

Text Books:

1. H. A. Taha, "Operations Research", Pearson
2. P. M. Karak – "Linear Programming and Theory of Games", ABS Publishing House
3. Ghosh and Chakraborty, "Linear Programming and Theory of Games", Central Book Agency
4. Ravindran, Philips and Solberg - "Operations Research", WILEY INDIA

References:

1. KantiSwaroop — "Operations Research", Sultan Chand & Sons
2. Rathindra P. Sen—"Operations Research: Algorithms and Applications", PHI
3. R. Panneerselvam - "Operations Research", PHI
4. A.M. Natarajan, P. Balasubramani and A. Tamilarasi - "Operations Research", Pearson
5. M. V. Durga Prasad – "Operations Research", CENGAGE Learning
6. J. K. Sharma - "Operations Research", Macmillan Publishing Company

Human Resource Management (HSS)
CE605B
Contact: 3L
Credits: 3

Introduction : HR Role and Functions, Concept and Significance of HR, Changing role of HR managers - HR functions and Global Environment, role of a HR Manager.

Human Resources Planning : HR Planning and Recruitment: Planning Process - planning at different levels - Job Analysis - Recruitment and selection processes - Restructuring strategies - Recruitment-Sources of Recruitment-Selection Process-Placement and Induction-Retention of Employees.

Training and Development : need for skill upgradation - Assessment of training needs - Retraining and Redeployment methods and techniques of training employees and executives - performance appraisal systems.
Performance Management System : Definition, Concepts and Ethics-Different methods of Performance Appraisal- Rating

Errors-Competency management.

Industrial Relations : Factors influencing industrial relations - State Interventions and Legal Framework - Role of Trade unions - Collective Bargaining - Workers' participation in management.
Case study.

Books :

1. Gary Dessler, Human Resource Management - (8th ed.,) Pearson Education, Delhi

2.Decenzo& Robbins, Personnel / Human Resource Management, 3rd ed., John Wiley & Sons (Pvt.) Ltd.
3. BiswajeetPatanayak, Human Resource Management, PHI, New Delhi
4. Luis R. Gomez, Mejia, Balkin and Cardy, Managing Human Resources PHI, New Delhi.

Materials Handling
CE605C
Contacts: 3L
Credits- 3

Module	Syllabus	Contact Hrs
1.	**Introduction:** Definition, importance and scope of materials handling (MH); classification of materials; codification of bulk materials ; utility of following principles of MH – (i) materials flow, (ii) simplification, (iii) gravity, (iv) space utilization, (v) unit size, (vi) safety, (vii) standardization, (viii) dead-weight, (ix) idle time, (x) motion.	**4**
2A.	**Unit load:** Definition; advantages & disadvantages of unitization; unitization by use of platform, container, rack, sheet, bag and self contained unit load; descriptive specification and use of pallets, skids, containers, boxes, crates and cartons; shrink and stretch wrapping.	**3**
2B	**Classification of MH Equipment :** Types of equipment – (i) industrial trucks & vehicles, (ii) conveyors, (iii) hoisting equipment, (iv) robotic handling system and (v) auxiliary equipment; Independent equipment wise sub classification of each of above type of equipment.	**3**
3.	**Industrial trucks & vehicles :** Constructional features and use of the following equipment – (i) wheeled hand truck, (ii) hand pallet truck, (iii) fork lift truck; Major specifications, capacity rating and attachments of fork lift truck.	**5**
4.	**Conveyors :** Use and characteristics of belt conveyor, constructional features of flat and troughed belt conveyor; Use and constructional features of Flg. types of chain conveyors – (i) apron, car and trolley type; Construction of link-plate chains; Dynamic phenomena in chain drive; Use and constructional features of roller conveyors; Gravity and powered roller conveyor; Pneumatic conveyor-use and advantages; Positive, negative and combination system of pneumatic conveyors; constructional feature, application and conveying capacity of screw conveyor.	**8**
5.	**Hoisting Equipment :** Advantage of using steel wire rope over chain; constructional features of wire ropes; Rope drum design; Pulley system-simple vs. multiple pulley; Load handling attachments : hooks, grabs, tongs, grab bucket; Arrangement of hook suspension with cross piece and pulleys (sheaves); Use and constructional features of (i) hand operated trolley hoist , (ii) winch; (iii) bucket elevator, (iv) Jib crane, (v) overhead traveling crane and (vi) wharf crane; Level luffing system of a wharf crane; Utility of truck mounted and crawler crane.	**8**
6A.	**Robotic handling :** Materials handling at workplace; Major components of a robot; Applications of robotic handling.	**2**
6B.	**Auxiliary Equipment :** Descriptive specification and use of – (i) Slide and trough gates, (ii) belt, screw and vibratory feeders, (iii) Chutes, (iv) positioners like elevating platform, ramps, universal vise; (v) ball table.	**3**

Books Recommended :

1. S. Ray, Introduction to Materials Handling, New Age Int. Pub.
2. T. K. Ray, Mechanical Handling of Materials, Asian Books Pvt. Ltd.
3. T.H. Allegri, Materials Handling: Principles and Practices, CBS Publishers and Distributors.
4. J.A. Apple, Material Handling System Design, John Wiley & Sons.

Practical

Highway Engineering Lab.

Syllabus for B.Tech(Civil Engineering) Up to Third Year

Code :CE691

Syllabus for B.Tech(Civil Engineering) Up to Third Year

Contact: 3P
Credits :2

Tests on highway materials – Aggregates- Impact value, Los-Angeles Abrasion value water absorption , Elongation & Flakiness Index.
Bitumen & bituminous materials: Specific gravity, penetration value, softening point, loss on heating, Flash & Fire point test.
Stripping value test
Design of B.C. & S.D.B.C. Mix
CBR Test
Marshal Stability Test
Benkelman beam Test.
References:
BIS codes on Aggregates & Bituminous materials
Highway material testing(Laboratory Manual)by S.K. Khanna and CE.G. Justo
Relevant IS & I.R.C. codes.

Detailing of RCC & steel structures
Code : CE692
Contact :3P
Credits: 2

RCC structures
General considerations: Design principle of R.C.C. sections. Limit state method of design Loads and stresses to be considered in the design as per I.S. code provision.

Design & detailing of a i) simply supported R.C.C Beam ii) Continuous T- Beam.

Design & Detailing of columns, isolated and combined footing

Design & detailing of a i) simply supported one way slabii) One way Continuous slab.

Design of different units: Slab, beam column, roofing and staircase from floor plan of a multistoried frame building, typical detailing of a two way floor slab.

Steel structures
Problems on general consideration and basic concepts
Discussion on different loads (i.e. wind load, Dead load, live load and others) as per IS875
Design & drawing of the following components of a roof truss:

1. Members of the roof truss.
2. Joints of the roof truss members
3. Purlins
4. Gable bracings
5. Column with bracings
6. Column base plate
7. Column foundation

References:
I.S- 456-2000, SP 34, SP 16,I.S. 875, I.S. Code 800 – 2007, Standard text books on RCC & Steel Design

CAD Laboratory
Code CE: 693
Contact 3P Credits: –
2
Introduction and important features ofa software dealing with analysis and design of structures
Analysis and design of a multistoried building using software, Preparation of detailed drawings of different structural elements including ductility detailing
RCC Slab, beam, column and footing design.

Syllabus for B.Tech(Civil Engineering) Up to Third Year

VII SEMESTER SYLLABUS

Environmental Engineering
Code – CE 701
Contact – 3L
Credits- 3

Syllabus for B.Tech(Civil Engineering) Up to Third Year

Module	Broad Topic	Details of Course Content	Hours	Total
1	Water Demand	Water demands; Per capita demand; Variations in demand; Factors affecting demand;Design period; Population forecasting	3	36
2	Sources of Water	Surface water sources; ground water sources	2	
3	Water Quality	Impurities in water; Water quality parameters; Standards for potable water	2	
4	Conveyance of water	Hydraulic design of pressurepipes	2	
5	Water Treatment	Typical flow chart for surface and ground water treatments; Aeration, Plain sedimentation, Sedimentation with coagulation, Water Softening, Filtration,Disinfection.	8	
6	Water Distribution	Analysis of distribution network;Storage and distribution reservoirs; Capacity of reservoirs	4	
7	Sewage and Drainage	Definition of Common Terms, Quantity estimation for sanitary sewage and storm sewage	3	
8	Sewer Design	Hydraulic design of sewers, Partial flow diagrams and Nomograms	3	
9	Wastewater Characteristics	Physical, chemical and biological characteristics, DO, BOD and COD	3	
10	Wastewater Treatment	Typical flow chart for wastewater treatment; Primary Treatments; Secondary Treatments: Activated Sludge Process, Trickling Filter Process, Septic Tank	6	

References:

Sl. No	Name	Author	Publishers
1	Environmental Engineering,	S.K .Garg,	Khanna Publishers
2	Water Supply, Waste Disposal and Environmental Pollution Engineering, ,	A.K.Chatterjee	Khanna Publishers.
3	Environmental Engineering, Vol.II,	P. N. Modi,	
4	Environmental Modelling, ,	Rajagopalan	Oxford University Press.
5	Environmental Engineering	P. V. Rowe	TMH

Water Resource Engineering
Code – CE 702
Contact – 3L
Credits- 3

Syllabus for B.Tech(Civil Engineering) Up to Third Year

Module	Details of Course Content	Hours	Total
1	Catchment area and Hydrologic cycle, Measurement of rainfall – Rain gauges, Estimation of missing rainfall data, checking of consistency, Optimum number of Rain gauges. Calculation of average rainfall over area – different methods, Frequency analysis of rainfall intensity duration curve. Rainfall mass curve, hyetograph, Examples	4	36
2	Evaporation, evapo-transpiration and infiltration: Processes, Factors affecting run off, estimation of run-off, rainfall run off relationship	4	
3	Stream flow measurement: Direct and indirect methods, Examples. Stage-discharge relationships	4	
4	Hydrographs; characteristics: Base flow separation. Unit Hydrographs. Derivation of unit hydrographs, S-curve, flood routing.	4	
5	Types of Irrigation systems, methods of irrigation: Water requirements of crops: Crop period or Base period, Duty & Delta of a crop, relation between Duty & Delta, Duty at various places, flow Duty & quantity Duty, factors affecting Duty, measures for improving Duty of water, crop seasons	4	
6	Canal Irrigation: Introduction, classification of irrigation canals, Efficient section, certain important definitions, Time factor, Capacity factor, full supply co- efficient, Nominal duty, Channel losses, Examples.	2	
7	Design of unlined alluvial channels by silt Theories: Introduction, Kennedy's theory, procedure for design of channel by Kennedy's method, Lacey's theory, concept of True regime Initial regime and final regime, design procedure using Lacey's theory, examples	4	
8	Water logging and drainage: Causes, effects and prevention of waterlogging. Type of drains-open drains and closed drains (introduction only), Discharge and spacing of closed drains. Examples. Lining of Irrigation Canals : Objectives, advantages and disadvantages of canal lining, economics and requirements of canal lining, Design of lined Canals-examples	6	
9	Introduction to ground water flow, Darcy law; Wells: Definition, Types-open well or Dug well, Tube well, open well-shallow open well, deep open well, cavity formation in open wells, construction of open wells, Yield of an open well – Equilibrium pumping test, Recuperating test, examples, Tube wells - Strainer type, cavity type, slotted type. Examples.	4	

References

Sl. No	Name	Author	Publishers
1	Engineering Hydrology	K. Subramanya	Tata McGraw-Hill
2	A Text Book of Hydrology-	P. Jaya Ram Reddy	Laxmi Publications-New Delhi
3	Hydrology & Water Resource Engineering-	S.K Garg	Khanna Publishers.
4	Hydrology Principles, Analysis and Design	H. M. Raghunath.	.
5	Hydraulics of Groundwater	J. Bear	McGraw-Hill
6	Water Resources Engineering Through Objective Questions	K. Subramanya	Tata McGraw-Hill
7	Irrigation & Water Power Engineering-	B.C Purnia, S Pande-	Standard Publication-New Delhi.
8	Irrigation Engineering	G.L Aswa	Wiley Eastern-New Delhi
9	Irrigation, Water Resource & Water Power Enginee ring-.	Dr. P.N Modi-	Standard Book House-New Delhi

Syllabus for B.Tech(Civil Engineering) Up to Third Year

Professional Elective II

Advanced Foundation Engineering
Code – CE 703A
Contact – 3L
Credits- 3

Module	Details of Course Content	Hours	Total
1	**Soil Exploration and Site Investigation** Planning of soil exploration programme, Field testing, Preparation of bore-log and soil investigation report Geo-physical exploration: Seismic refraction survey electrical resistively method	4	36
2	**Shallow Foundations** Bearing Capacity from SPT and SCPT and Plate load Test data, Proportioning of footing based on settlement criteria. Beams on elastic foundation: Infinite beam, Finite beam, Modulus of sub-grade reaction and effecting parameters. Raft Foundation: Settlement and Bearing Capacity analysis, Analysis of flexible and rigid raft as per IS 2950.	10	
3	**Deep Foundations** Pile: Tension piles, Laterally loaded piles: Elastic continuum approach, Ultimate load Analysis, Deflection and maximum moment as per IS 2911, Pile load test Drilled Shaft: Construction procedures, Design Considerations, Load Carrying Capacity and settlement analysis Caissons: Types, Sinking and control.	8	
4	**Retaining walls and sheet pile structures** Gravity, cantilever and counter fort retaining walls: Stability checks and design Sheet Pile Structures: Cantilever sheet piling, Anchored sheet piling: Free and fixed earth support methods of Analysis, Braced Excavation	8	
5	**Design of foundation for vibration control** Elements of vibration theory, Soil- springs and damping constants, dynamic soil parameters, Types of Machine foundations, General consideration in designing dynamic bases.	4	
6	**Foundations on expansive soils**: Problems and Remedies	2	

References:

Sl. NO	Name	Author	Publishers
1	Foundation Analysis & Design	J.E. Bowels	McGraw Hill
2	Principles of Foundation Engineering	B.M. Das	Thomson Book
3	Foundation Design Manual	N. V. Nayak	Dhanpat Rai Publication Pvt. Ltd
4	Foundations for Machines: Analysis and design	ShamsherPrakash, Vijay K Puri	Wiley Series in Geotechnical Engineering
5	Advance Foundation Engineering	N. Som& S. C. Das	Tata McGraw Hill
6	Hand Book of Machine Foundation	Sirinivashalu& C.V. Vaiddyanathan P.	
7	IS –1904, 6403, 8009, 2950, 2911 etc	-	Bureau of Indian Standard

Soil Stabilisation & Ground Improvement Technique Code – CE 703B

Contact – 3L
Credits- 3

Syllabus for B.Tech(Civil Engineering) Up to Third Year

Module	**Details of Course Content**	Hours	Total
1	**Soil Stabilization**: Introduction, Stabilization of soil with granular skeleton and soil without granular skeleton, common nomenclature of stabilized soil systems and stabilization methods, specific methods of soil stabilization: Stabilization with cement, lime fly-ash	8	
2	**Insitu densification**: Introduction, Compaction: methods and controls *Densification of granular soil***:** Vibration at ground surface, Impact at ground surface, Vibration at depth (Vibroflotation), Impact at depth. *Densification of Cohesive Soils*: Preloading and dewatering, Design of Sand drains and Stone columns, Electrical and thermal methods.	12	
3	**Geo-textiles**: Over view: Geotextiles as separators, reinforcement. Geotextiles in filtration and drainage, geotextiles in erosion control.	6	

4	**Grouting**: Over view: Suspension and Solution grout, Grouting equipment and methods, Grout design and layout, Grout monitoring schemes.	6	36
5	**Soil stability**: Reinforced earth fundamentals, Soil nailing, Soil and Rock Anchors, Underpinning	4	

References:

Sl. No	Name	Author	Publishers
1	Foundation Analysis & Design	J.E. Bowels	McGraw Hill
2	Principles of Foundation Engineering	B.M. Das	Thomson Book
3	Foundation Design Manual	N. V. Nayak	Dhanpat Rai Publication Pvt. Ltd
4	Construction and Geotechnical methods in foundation engineering	R.M. Koener	McGraw Hill
5	Technology in tunnelling and dam construction	A.V. Shroff. & D.L. Sh ah	Oxford and IBH Publishing Co.Pvt.Ltd
6	Reinforced Earth	T S Ingold	Thoam Telford
7	Designing with Geosynthetics	R M Koerner	Prentice Hall

Advanced Highway &Transportation Engineering
Code – CE 703C
Contact – 3L
Credits- 3

Module	Details of Course Content	Hours	Total
1	Traffic Engineering : Road user and vehicle characteristics; Traffic flow characteristics – Traffic Volume, Speed, Headway, Concentration and Delay; Traffic surveys & studies; Traffic estimation; Statistical applications in traffic engineering analysis; Parking; Road intersections – Basic traffic conflicts, classification of at-grade intersections, channelization, rotaries, traffic signals, signs and marking; Road Safety; Traffic System Management.	12	36
2	Transportation planning : Transportation planning at different levels; Transport Project planning – Planning studies and investigation; Elements of Urban Transportation Planning; Transport Demand Analysis; Preparation of Project Report	8	
3	Railway Engineering : Location surveys & alignment, Permanent way components, Gauges, Geometric Design, Points & crossings, Stations & Yards, Signalling, Track Maintenance	8	
4	Airport Engineering : Functional areas of airports: Runways, Taxiways, , Aprons, Terminal buildings; Classification of Airports; Airport site selection; Design of Runway, Runway orientation, Wind Rose diagram; Design of Taxiway and Terminal Building	8	

References

Sl. No	Name	Author	Publishers
1	Transportation Engineering	Khisty and Lal	PHI
2	A Text Book of Railway Engineering	S.P. Arora& S.C. Saxena	
3	**Railway Engineering**	Satish Chandra	Oxford University press
4	**Transportation Engineering**	**Vazirani&Chandola**	
5	Airport planning and Design	S.K.Khanna&M.G.Arora	
6	Airport Transportation Planning & Design-.	Virendra Kumar &Satish Chandra	Galgotia Publication Pvt. Ltd. New Delhi

Professional Elective III

Advanced Structural Analysis
Code – CE 704A
Contact – 3L
Credits- 3

Sl. No	**Details of Course Content**	Hours	Total

1	Review of analysis of indeterminate structures; Force methods: Statically indeterminate structures (method of consistent deformations; theorem of least work) Displacement Methods: Kinematically indeterminate structures (slope-deflection method; moment distribution method). Matrix concepts and Matrix analysis of structures: Introduction; coordinate systems; displacement and force transformation matrices; Contra-gradient principle; element and structure stiffness matrices; Element and structure flexibility matrices; equivalent joint loads; stiffness and flexibility approaches. Matrix analysis of structures with axial elements: Plane Truss; Analysis by flexibility method Space trusses: Matrix analysis of beams and grids: Flexibility method for fixed and continuous beams: Stiffness method for grids: Matrix analysis of plane and space frames: Flexibility method for plane frames: Stiffness method for space frames:	18	36
2	Theory of Elasticity : Three dimensional stress and strain analysis, stress - strain transformation, stress invariants; equilibrium and compatibility equations, boundary conditions; Two dimensional problems in Cartesian, polar and curvilinear co-ordinates, bending of a beam, thick cylinder under pressure, complex variable, harmonic and bi-harmonic functions; Torsion of rectangular bars including hollow sections, bending problems; Energy principles, variational methods and numerical methods.	18	

References:

Sl. No	Name	Author	Publishers
1	Matrix Methods of Structural Analysis	M.B. Kanchi.	
2	Analysis of Structures	T.S. Thandavamoorthy	Oxford University Press
3	Intermediate Structural Analysis	C.K. Wang	Mc Graw Hill
4	Theory of Elasticity	Timoshenko & Goodier	McGraw-Hill

Hydraulic Structures
Code – CE 704B
Contact – 3L
Credits- 3

Module	Details of Course Content	Hours	Total
1	Diversion Head works: Necessity, Difference between weir and Barrage, Type of Weirs, Selection of site, layout and description of each part, Effects of construction of a weir on the river regime, causes of failure of weirs on permeable foundation and their remedies	4	36
2	Theories of seepage and Design of weirs and Barrages: Failure of Hydraulic Structures Founded on Pervious foundations: i) By piping ii) By Direct uplift, Bligh's creep theory of seepage flow, Khosla's theory & concept of flownets, concept of exit gradient and critical exit gradient, Khosla's method of independent variable for determination of pressures and exit gradient for seepage below a weir or a barrage, necessary corrections, examples.	6	
3	Hydraulic structures for canals: Canal falls – necessity, locations, types and description of Ogee fall, Trapezoidal-notch fall, Syphon well drop. Examples.	4	
4	Cross-Drainage Works: Necessity, types, selection of a suitable type (Introduction only)	4	
5	Dam (General): Definition, classification of Dams, factors governing selection of type of dam, selection of suitable site for a dam.	2	
	Earthen Dams: Introduction, Types of Earthen Dams, Methods of Construction, Causes of failure, Design Criteria, Determination of line of seepage or phreatic line in Earthen Dam, seepage control in Earthen Dam, Examples.	6	

6	Gravity Dam: Definition, Typical cross- section, Forces acting on Gravity Dam, Combination of forces for design, Mode of failure and Criteria for structural stability of Gravity Dams, Principal and shear stresses. Elementary profile of a Gravity Dam, Concept of High and low Gravity Dam, Examples.	6	

	Spillways: Types, Location, Essential requirements, spillway capacity. Components of spillway, Energy Dissipators, Stilling basins (Indian standard).	4	

References

Sl. No	Name	Author	Publishers
1	Irrigation Engineering and hydraulic structures.	Santosh Kumar Garg	Khanna Publishers.
2	Irrigation, water Resources and Water Power Engg.	Dr.P.N. Modi,	Standard Book House, Delhi-6
3	Water Resources Engineering Principle and practice	By Challa.	New Age Internation (P) Ltd. Publishers. New delhi, McGraw Hill
4	Design of Small Dams.	US Department of the Interior Bureau of Reclamation.	
5	Concrete Danms	R.S. Varsney,	Oxford & I & H Publishing Co. New Delhi

Free Elective II

Engineering Materials
Code – CE 705A
Contact – 3L
Credits- 3

Sl.No.	Syllabus	Contact Hrs.
1.	**Introduction:** Material Science—its importance in engineering; Classification of Materials—metals, polymers, ceramics, composites; Advanced materials—semiconductors, smart materials, nano-materials; Review atomic structure, Atomic bonding in solids—bonding forces and energies; ionic/covalent/metallic bonding.	2
2.	**Crystal Structure:** Fundamental concepts; Unit cells; seven crystal systems; single crystal, polycrystalline and non-crystalline materials; Metallic crystal structures—FCC, atomic packing factor, BCC & HCP structures.	2
3.	**Imperfections in Metals:** Point defects due to vacancy & impurities, alloys, solid solutions; Dislocations—linear defects, interfacial defects, grain boundaries.	2
4.	**Phase Diagrams:** Definition and basic concepts; solubility limit; Phase equilibria, one-component phase diagram, binary phase diagram, interpretation of phase diagrams.	3
5.	**Iron-carbon System:** allotropy of iron, iron-iron carbide phase diagram, properties and uses of plain carbon steel	2
6.	**Classification of Metals and Alloys- compositions, general properties and uses:** **Ferrous alloys:** Classification –low carbon steels, medium carbon steels, high carbon steels, stainless steels, alloy steels, tool and die steel, cast irons. **Non-ferrous alloys:** Copper & Copper alloys; Aluminum alloys; Zinc alloys; Nickel alloys; Lead & Tin alloys;	6

7.	**Mechanical Properties of Materials:** Elastic properties of materials—tensile and compressive stress and strain; stress-strain behaviour; moduli of elasticity (Young's modulus), yield strength, tensile strength, plastic deformation, true stress and strain; Ductility; Resilience; Toughness, impact tests; Hardness- Brinell, Rockwell and Vickers hardness and their testing procedures, correlation between hardness and tensile strength; Fatigue strength; Effect of temperature on tensile strength & impact properties, creep failure.	6
8.	**Heat Treatment:** Definition and purposes; Heat treatment processes for steels—Hardening, structural change during heating and cooling, factors affecting hardening; Tempering; Austempering; Normalizing; Annealing—full annealing, spheroidising annealing, stress–relieving, recrystallisation annealing; Preciptation or Age Hardening of non-ferrous alloys.	4
9.	**Polymers & Elastomers:** Definition; How polymers are made- polymerization; Polymer molecular structures; Thermoplastics & Thermosets; Special characteristics	2

Sl.No.	Syllabus	Contact Hrs.
	like low sp. gravity, optical, electrical & thermal property, decorative color, easy formability, low corrosion etc; Uses of polymers and elastomers.	
10.	**Ceramic Materials:** What is ceramics; common ceramic materials and their characteristics; How ceramics are made—sintering and vitrification process; Ceramic structures; Properties and applications.	2
11.	**Composite materials:** What is composites; Polymers matrix and their applications; Metal matrix and ceramic matrix composites and their applications; How composites are made.	2
12.	**Corrosion and Degradation of Engineering Materials:** Definition; Types of corrosion—uniform, pitting, crevice, galvanic, stress corrosion cracking and erosion; Corrosion control — material selection, environment control, proper design.	2
13.	**Materials Selection Methodology:** Selection of material based on required properties, availability and cost of material, environmental issues.	1

Books Recommended

1. Materials Science and Engineering by W.D. Callister and adapted by R. Balasubramaniam, Willey India, 2010 Ed.
2. Engineering Materials: properties and selection by Budinski & Budinski, 9th Ed., Prentice Hall India
3. Engineering Materials and Metallurgy by R.Srinivasan, 2nd Ed., Tata McGraw Hill.
4. Materials & Processes in Manufacturing by E.P.Degarmo and adapted by Black & Kosher, 10th Ed., Wiley India.
5. Materials Science and Engineering by V.Raghavan, 5th Ed., Prentice Hall India.

Electrical & Electronic Measurement
Code – CE 705B
Contact – 3L
Credits- 3

Topic	No of

Module-I

Measurements:	
● Method of measurement, Measurement system, Classification of instruments, Definition of accuracy, Precision, Resolution, Speed of response, Error in measurement, Classification of errors, loading effect due to shunt and series connected instruments.	3
Analog meters:	
● General features, Construction, Principle of operation and torque equation of Moving coil, Moving iron, Electrodynamometer, Induction instruments	3
● Principle of operation of the Electrostatic, Thermoelectric, Rectifier type instruments, Extension of instrument ranges and multipliers.	3

Module-II

Instrument Disadvantage of shunt and multipliers, Advantage of Instrument transformers, Principle of operation of Current & Potential transformer, errors. **Measurement of Power:** Principle of operation of Electrodynamic & Induction type wattmeter, Wattmeter **Measurement of**	4 4

- Measurement of medium, low and high resistances

Module-III

Measurement of Energy: ● Construction, theory and application of AC energy meter, testing of energy meters.	3
Potentiometer: ● Principle of operation and application of Crompton's DC potentiometer, Polar and Co-ordinate type AC potentiometer. Application.	4
AC Bridges: ● Measurement of Inductance, Capacitance and frequency by AC bridges.	4

Module-IV

Numerical Problems to be solved in the tutorial classes. Text Books:

1. A course in Electrical & Electronic Measurements & Instrumentation, A.K. Sawhney, Dhanpat Rai & sons.
2. Electrical Measurement & Measuring Instruments, E.W. Golding & F.C. Wides, Wheeler Publishing.
3. Electronic Instruments, H.S. Kalsi, Tata Mc-Graw hill, 2nd Edition.

Reference Books:

1. Sensors & Transducers, D. Patranabis, PHI, 2nd edition.
2. Digital Instrumentation, A.J. Bouwens, Tata Mc-Graw hill.
3. Modern Electronic instrumentation & Measuring instruments, A.D. Heltric & W.C. Copper, Wheeler Publication.
4. Instrument transducers, H.K.P. Neubert, Oxford University press.

Practical

Group Discussion
Code – HU Contact –
3L Credits- 2

Will be implemented latter

ENVIRONMENTAL ENGINEERING LAB
CODE: CE-791
CRDIT-2

Syllabus for B.Tech(Civil Engineering) Up to Third Year

Experiment No.	Experiment Name	Type of Test
1.	Determination of turbidity for a given sample of water	Physical
2.	Determination of color for a given sample of water	
3	Determination of solids in a given sample of water: Total Solids, Suspended Solids and Dissolved Solids	
4	Determination of pH for a given sample of water	Chemical
5	Determination of concentration of Chlorides in a given sample of water	
6	Determination of carbonate, bi-carbonate and hydroxide alkalinity for a given sample of water	
7	Determination of hardness for a given sample of water	
8	Determination of concentration of Fluorides in a given sample of water	
9	Determination of concentration of Iron in a given sample of water	
10	Determination of the Optimum Alum Dose for a given sample of water through Jar Test	
11	Determination of the Residual Chlorine in a given sample of water	
12	Determination of the Chlorine Demand for a given sample of water	
13	Determination of the Available Chlorine Percentage in a given sample of bleaching powder	
14	Determination of amount of Dissolved Oxygen (DO) in a given sample of water	
15	Determination of the Biochemical Oxygen Demand (BOD) for a given sample of wastewater	
16	Determination of the Chemical Oxygen Demand (COD) for a given sample of wastewater	
17	Determination of bacteriological quality of water: presumptive test, confirmative test and Determination of MPN	Bacteriological

CIVIL ENGINEERING PRACTICE SESSIONAL CE
792
CREDIT 2

Course Content Foundation
Engineering

Stability Analysis of Slopes, Preparation of typical soil test report, Estimation of bearing capacity and settlement of foundation from typical field data, Structural design and detailing of isolated rectangular footing and combined footing.
Water Resource Engineering
Estimation of runoff, Field capacity and permanent wilting point Construction of hydrograph& S curve, efficient section of canal, Design of lined canals, Determination of yield of wells, flood routing

Environmental Engineering

Population forecasting, Analysis and design of water distribution network, Hydraulic design of sewer

Transportation Engineering

Determination of highway capacity, Highway geometric design, Design of flexible and rigid pavement, Traffic Signal Design

Material Testing lab CE
793A
CREDIT 2

Impact tests: Charpy and Izod tests;
Test for drawability of sheet metals through cupping test;
Fatigue test of a typical sample.
Sample preparation and etching of ferrous and non-ferrous metals and alloys for metallographic observation;
Experiments on heat treatment of carbon steels under different rates of cooling including quenching, and testing for the change in hardness and observing its microstructural changes through metallographic studies.
Observation of presence of surface/ sub-surface cracks using different non-destructive techniques, such as dye penetration (DP) test, magnaflux test, ultrasonic or eddy current test.
(At least six experiments must be conducted)

Electrical & Electronics Measurement lab CE

793B

CREDIT 2

List of Experiments:

1. Instrument workshop- Observe the construction of PMMC, Dynamometer, Electrothermal and Rectifier type of instruments, Oscilloscope and Digital multimeter.
2. Calibrate moving iron and electrodynamometer type ammeter/voltmeter by potentiometer.
3. Calibrate dynamometer type wattmeter by potentiometer.
4. Calibrate AC energy meter.
5. Measurement of resistance using Kelvin double bridge.
6. Measurement of power using Instrument transformer.
7. Measurement of power in Polyphase circuits.
8. Measurement of frequency by Wien Bridge.
9. Measurement of Inductance by Anderson bridge
10. Measurement of capacitance by De Sauty Bridge.
11. Measurement of capacitance by Schering Bridge.

VIII Semester

Organisational Behaviour
HU801A
Contracts: 2L
Credits- 2

1. Organizational Behaviour: Definition, Importance, Historical Background, Fundamental Concepts of OB, Challenges and Opportunities for OB. [2]
2. Personality and Attitudes: Meaning of personality, Personality Determinants and Traits, Development of Personality, Types of Attitudes, Job Satisfaction. [2]
3. Perception: Definition, Nature and Importance, Factors influencing Perception, Perceptual Selectivity, Link between Perception and Decision Making. [2]
4. Motivation: Definition, Theories of Motivation - Maslow's Hierarchy of Needs Theory, McGregor's Theory X & Y, Herzberg's Motivation-Hygiene Theory, Alderfer's ERG Theory, McClelland's Theory of Needs, Vroom's Expectancy Theory. [4]
5. Group Behaviour: Characteristics of Group, Types of Groups, Stages of Group Development, Group Decision Making. [2]
6. Communication: Communication Process, Direction of Communication, Barriers to Effective Communication. [2]
7. Leadership: Definition, Importance, Theories of Leadership Styles. [2]
8. Organizational Politics: Definition, Factors contributing to Political Behaviour. [2]
9. Conflict Management: Traditional vis-a-vis Modern View of Conflict, Functional and Dysfunctional Conflict, Conflict Process, Negotiation – Bargaining Strategies, Negotiation Process. [2]
10. Organizational Design: Various Organizational Structures and their Effects on Human Behaviour, Concepts of Organizational Climate and Organizational Culture. [4]

References:

1. Robbins, S. P. & Judge, T.A.: Organizational Behavior, Pearson Education, 15th Edn.
2. Luthans, Fred: Organizational Behavior, McGraw Hill, 12th Edn.
3. Shukla, Madhukar: Understanding Organizations – Organizational Theory & Practice in India, PHI
4. Fincham, R. & Rhodes, P.: Principles of Organizational Behaviour, OUP, 4th Edn.
5. Hersey, P., Blanchard, K.H., Johnson, D.E.- Management of Organizational Behavior Leading Human Resources, PHI, 10th Edn.

Or
Project Management
HU801B
Contracts: 2L
Credits- 2

1. Project Management Concepts: Concept and Characteristics of a Project, Importance of Project Management.[1]
2. Project Planning: Project Evaluation, Financial Sources, Feasibility Studies. [4]
3. Project Scheduling: Importance of Project Scheduling, Work Breakdown Structure and Organization Breakdown Structure, Scheduling Techniques – Gantt Chart and LOB, Network Analysis – CPM/PERT. [6]

4. Time Cost Trade-off Analysis – Optimum Project Duration. [2]
5. Resource Allocation and Leveling. [2]
6. Project Life Cycle. [2]
7. Project Cost – Capital & Operating Costs, Project Life Cycle Costing, Project Cost Reduction Methods. [2]
8. Project Quality Management: Concept of Project Quality, TQM in Projects, Project Audit. [1]
9. Software Project Charateristics and Mangement [2]
10. IT in Projects: Overview of types of Softwares for Projects, Major Features of Project Management Softwares like MS Project, Criterion for Software Selection. [2]

References

1. Gopalkrishnan P. and Rama Mmoorthy: Text Book of Project Management, Macmillan
2. Nicholas John M.: Project Management for Business and Technology – Principles and Practice, Prentice Hall India, 2nd Edn.
3. Levy Ferdinand K., Wiest Jerome D.: A Management Guide to PERT/CPM with GERT/PDM/DCPM and other networks, Prentice Hall India, 2nd Edn.
4. Mantel Jr., Meredith J. R., Shafer S. M., Sutton M. M., Gopalan M. R.: Project Management: Core Text Book, Wiley India, 1st Indian Edn.
5. Maylor H.: Project Management, Pearson, 3rd Edn.
6. Nagarajan K.: Project Management, New Age International Publishers, 5th Edn.
7. Kelkar. S.A, Sotware Project Management: A concise Study, 2nd Ed., PHI

Professional Elective IV

Environmental Pollution and Control
Code – CE 801A
Contact – 3L
Credits- 3

Sl. No	Details of Course Content	Hours	Total
1.	**Introduction**: Environment. Pollution, Pollution control	2	36
2.	**Air Pollution**: Air Pollutants: Types, Sources, Effects; Air Pollution Meteorology: Lapse Rate, Inversion, Plume Pattern; Air Pollution Dispersion Model: Point Source Gaussian Plume Model, Stability Classes, Stability Charts, Design of Stack Height.	8	
3.	**Air pollution Control**: Self cleansing properties of the environment; Dilution method; Engineered Control of Air Pollutants: Control of the particulates, Control of Gaseous Pollutants, Control of Air pollution from Automobiles.	8	
4.	**Noise Pollution:** Definition; Sound Pressure, Power and Intensity; Noise Measurement: Relationships among Pressure, Power and Intensity, Levels, Frequency Band, Decibel Addition, Measures of community Noise i.e. L_N, L_{eq}, L_{dn},, L_{NP}; Sources, ; Effects; Control.	4	
5.	**Water pollution**: Pollution Characteristics of Typical Industries, Suggested Treatments.	4	
6.	**Global Environmental Issues**: Ozone Depletion, Acid Rain, Global Warming-Green House Effects	4	
7.	**Administrative Control on Environment:** Functions of Central and State Pollution Control Boards; Environmental Clearance Process for Industries and Infrastructural Projects	4	
8.	**Environmental Laws:** Water Act, Air Act, Motor Vehicle Act	2	

References:

Sl. No	Name	Author	Publishers
1.	Introduction to Environmental Engineering and Science	G. Masters, W. Ela	PHI
2	Environmental Engineering: A Design Approach	A. Sincero, G. Sincero	PHI
3	Environmental Engineering	P. V. Rowe	TMH
4	Environmental Engineering,	S.K . Garg,	Khanna Publishers
5	Air Polution	Rao and Rao	TMH
4	Water Supply, Waste Disposal and Environmental Pollution Engineering, ,	A.K.Chatterjee	Khanna Publishers.
5	Environmental Engineering, Vol.II,	P. N. Modi,	
6	Environmental Modelling, ,	Rajagopalan	Oxford University Press.

Syllabus for B.Tech(Civil Engineering) Up to Third Year

Water Resources Management & Planning
Code – CE 801B
Contact – 3L
Credits- 3

Module	Details of Course Content	Hours	Total
1	**Planning and analysis of Water Resource Systems**: Introduction, System Analysis, Engineers and Policymakers	3	36
2	**Methods of Analysis:** Introduction, Evaluation of Time streams of Benefits and Costs. Plan formulation, Planning models and solution procedures, Lagranges Multipliers, Dynamic Programming, Recursive equations, Bellmans' principle of optimality. Curse of dimensionality of discrete dynamic programming. Examples	8	
3	**Reservoir Operation:** Sequential process, single Reservoir problem - with release as decision variable, with storage as decision variable (deterministic approach). Examples, Related Computer Programming. Multi–reservoir problems (Deterministic approach)	6	
4	**Water Resources Planning under Uncertainty:** Introduction, probability concepts and Methods – Random variable and Distributions, Univariate probability Distributions ,properties of Random variable – Moment and Expectation (Univariate Distributions) , Moment Generating Functions, Measures of Central tendency, Measures of Dispersion, Measures of symmetry (Skewness), measures of peakedness (kurtosis), examples	10	
5	**Stochastic River Basin Planning Model:** Introduction, Reservoir operation, Stochastic, Dynamic programming, Operating Model, Probability Distribution of Storage volumes and Releases, examples	6	
6	**Water quality Management:** Prediction and Simulation, Water quality Management Modeling	3	

References:

Sl. No	Name	Author	Publishers
1	Applied Hydrology	V.T. Chow	
2	Hydrology	Raudkivi	
3	Stochastic Hydrology	Jayarami Reddy	
4	Water Resources Engg.	M.C. Chaturvedi	
5	Water Resources Systems Planning & Analysis Loucks, Jery R	Ddenice P Stedinger& Douglas A Heinth	Prentice Hall, Inc New Jersy.
6	Water Resources Engineering	Larry W Mays	John Wiley & Sons(Asia)

Remote Sensing and GIS
Code – CE 801C
Contact – 3L Credits: 3

Sl. No	Details of Course Content	Hours	Total
1	**Introduction:** Definition and types of remote sensing, Tacheometry (Planimetry/ altimetry), Triangulation (Frame work / adjustment), Trilateration (EDM/ Total Station), Geodetics (physical/ geometrical geodesy), Error Analysis (causes / law of weights), Numerical example	7	36
2	**Photogrammetry:** Camera System (phototheodolite/ aircraft), Ground photograph (oblique/orthogonal streophoto), Aerial photograph (perspective scale/ flight planning), distortion (relief / tilt), Geometrix (parallax / mapping), application (topographics / interpretation), Numerical examples	7	

3	**Satellite survey:** Satellite Sensing (Sensors / platforms), energy sources (electromagnetic / atmospheric refraction), visual interpretation (Band width), digital processing (imageries / enhancement), data integration (multi-approach / GIS), microwave imaging (active system / radars), applications	7	
4	**Astronomy:** Celestial sphere (star-coordinates / transformation), field astronomy (azimuth, solar and polar method), 3D computation (local vs global), spherical trigonometry, Multilateration, Observation, Corrections in astronomy, Correlation of low, medium, remote objects, Global Positioning Systems	7	

5	**Geoinformatics:** GIS concept (Introduction/ definition), planning and management, spatial data model, database and DBMS, linking of attributes, geospatial analysis, modern trends	8	

References:

Sl. No	Name	Author Publishers
1	Surveying (Volume 2):	Duggal S.K. Tata McGraw Hill
2	Remote Sensing & GIS:	Bhatta B. Oxford Univ Press
3	Geographic Information System:	Tor Bern Herdgen Wiley
4	Surveying:	Bannister, Raymond & Baker Pearson Education
5	Remote Sensing & Image Interpretation:	Lilesand, Kiefer and Chipman Wiley
6	Surveying (Volume 2):	Kanetker.&Kulkarni
7	Remote Sensing & Geographical information System	Reddy M.A. (BS publication).
8	Advanced Surveying	Rampal K.K.
9	Fundamantals of Geographic Information System:	Demers M.N. (Wiley)

Professional Elective V

Finite Element Method
Code – CE 802A
Contact – 3L Credits: 3

No	**Details of Course Content**	Hours	Total
1	Introduction to Finite ElementAnalysis: Introduction, Basic Concepts of Finite Element Analysis, Steps in Finite Element Analysis, Fundamental concepts of Elasticity	4	36
2	Finite Element Formulation Techniques: Virtual Work and Variational Principle, GalerkinApproach, Displacement Approach, Stiffness Matrix and Boundary Conditions	4	
3	Element properties: Concepts of shape functions: Natural Coordinates, one dimensional, Triangular, Rectangular Elements, Lagrange and Serendipity Elements Isoparametric Formulation: Isoparametric Elements, Stiffness Matrix of Isoparametric Elements, Numerical Integration: One Dimensional, Two Dimensional	8	
4	Formation of stiffness matrices and analysisofTruss, Continuous Beam and Simple Plane Frame	6	
5	FEM for two dimensional analysis**:** Constant Strain Triangle, Linear Strain Triangle, Rectangular Elements, Numerical Evaluation of Element Stiffness, Computation of Stresses	6	
6	FEM for Plates : Introduction to Plate Bending Problems, Finite Element Analysis of Thin Plate	4	
7	Introduction to application of standard FEM software in civil Engineering	4	

References:

Sl. No	Name	Author Publishers
1	Finite Element Method with Applications in Engineering	Y. Desai et. al Pearson
2	Introduction to Finite Element in Engineering	Chandrapatla&Belegundu Pearson Education
3	A First Course in Finite Element Method	D. L. Logan Thomson
4	Surveying:	Bannister, Raymond & Baker Pearson Education
5	Concepts and Applications of Finite Element Analysis	R. D. Cook et. al Wiley India
6	Finite Element Analysis – Theory and Programming	
7	Matrix, Finite Element,Computer and Structural Analysis	C. S. Krishnamoorthy Tata Mcgraw Hill M. Mukhopadhyay Oxford and IBH Publishing Co. Pvt. Ltd., New Delhi, India
8	Finite Element Procedures	K. J. Bathe PHI, New Delhi, India

Syllabus for B.Tech(Civil Engineering) Up to Third Year

Syllabus for B.Tech(Civil Engineering) Up to Third Year

Dynamics of Soils and Foundations
Code – CE 802B
Contact – 3L Credits: 3

No	**Details of Course Content**	Hours	Total
1	Introduction: Types of Machine Foundations, General requirement of Machine foundations, Dimensional criteria, Design data, Permissible amplitude, Permissible Bearing pressure	2	36
2	**Fundamental of vibrations**: Degrees of freedom, Natural frequency, Undamped single degree freedom system, Damped single degree freedom system, Transmissibility, Response to ground motion, Introduction to multiple degree freedom system	8	
3	Dynamic properties of Soil, Laboratory and field evaluation of soil properties as per IS codes;	8	
4	Analysis and design of Block type Machine Foundation: Modes of Vibrations, Methods of Dynamic Analysis, Design considerations for dynamically loaded foundations and constructional features; Design procedures for foundations for hammers, reciprocating engines , Vibration Isolation and damping	10	
5	Liquefaction of soils: Definition, Causes and effects of Liquefaction, Evaluation of Liquefaction potential, Mitigation of Liquefaction Hazards	6	
6	Propagation of elastic waves in soils: Mechanism of wave propagation, Body waves, Surface waves, Rayleigh waves	2	

Sl. No	Name	Author	Publishers
1	Hand Book of Machine Foundation	Srinivasalu & Vaidyanathan	TMH
2	Dynamics of Bases and Foundations	D. D. Barkan	Mc-Graw Hill
3	Geotechnical Earthquake Engineering	S. L. Kramer	Printice Hall
4	Earthquke Resistant Design	D. J. Dorwick	Wiley
5	Fundamentals of Soil Dynamics & Earthquake Engineering	B. B. Prasad	PHI

Design of Tall Buildings
Code – CE 802C
Contact – 3L
Credits: 3

Sl. No	**Details of Course Content**	Hours	Total
1	Introduction : Necessity of Tall Buildings, Design Philosophy, Strength and Stability, Creep, Shrinkage and Temperature Effects, Fire, Foundation Settlement and Soil-Structure Interaction	6	36
2	Loadings : Gravity loading, Wind loading, Earthquake Loading, Combination of Loadings	6	
3	Structural Forms : Braced-Frame Structures, Rigid Frame Structures, Infilled-Frame Structures, Shear Wall Structures, Wall Frame Structures, Tubular Structures, Core Structures, Floor Systems – Reinforced Concrete : One-Way slab, Two-way slab, Floor Systems – Steel Framing, One-way Beam System, Two-Way Beam System, Three-Way Beam System, Composite Steel-Concrete Floor Systems	12	
4	Modelling for Analysis : Approaches to analysis, Highrise behaviour, Modeling for approximate analysis, Modelling for Accurate Analysis	4	
5	Stability of High-rise buildings, Buckling analysis of Frames	4	
6	Dynamic Analysis : Dynamic Response to Wind Loading, Dynamic Response to Earthquake Loading	4	

*The objective of this course is to introduce basic principles and design philosophy of tall buildings. Detail analytical treatment is not required.

Sl. No	Name	Author	Publishers
1	Tall Building Structures: Analysis and Design	Bryan S. Smith and Alex Coull	John Wiley & Sons, Inc, New York, 1991
2	Designing Tall Buildings	Mark Sarkinsian,	Routledge, New York, 2012
3	Structural Frameworks	Clyde T. Morris and Samuel T.	John Wiley

Syllabus for B.Tech(Civil Engineering) Up to Third Year

Syllabus for B.Tech(Civil Engineering) Up to Third Year

Pavement Design
Code – CE 802D
Contact – 3L
Credits: 3

Sl. No	Details of Course Content	Hours	Total
1	Principles of Pavement Design : Types of Pavements, Concept of pavement performance, Structural and functional failure of pavement, Different types of pavement performance, Different pavement design approaches	6	36
2	Traffic Consideration in Pavement Design : Vehicle types, Axle configurations, Contact shapes and contact stress distribution, Concept of standard axle load, Vehicle damage factor, Axle load surveys, Estimation of design traffic	6	
3	Pavement Material Characterization : Identification of different type of materials Field and laboratory methods for characterization of pavement materials	8	
4	Analysis and Design of Flexible Pavements : Selection of appropriate theoretical model for flexible pavements, Analysis of different layers of flexible pavements based on linear elastic theory, Different methods of design of flexible pavements, IRC guidelines(IRC-37)	6	
5	Analysis and Design of Rigid Pavements : Selection of appropriate theoretical models for rigid pavements, Analysis of wheel load stresses, curling, temperature differential, Critical stress combinations, Different methods of design of rigid pavements, IRC guidelines (IRC-58)	6	
6	Pavement Overlay Designs : Overlay design as per Indian Roads Congress guidelines (IRC-81) Overlay design as per AASHTO-1993 guidelines	4	

References :

Sl. No	Name	Author	Publishers
1	Principles of Pavement Design	E.J.Yoder and M.W. Witczak	Wiley
2	Pavement Analysis and Design	Y. H. Huang	Prentice-Hall
3	Highway Engineering	Khanna and Justo	Nem Chand
4	IRC-37, IRC-58, IRC-73, IRC-81, IRC-106 and other relevant IRC codes	Indian Roads Congress	

Structural Engineering Design Practice
Code – CE 891
Contact – 6P Credits: 4

Sl. No	Details of Course Content	Hours	Total
1	Water Tanks : Beams curved in plan, Domes, Circular and Intze Tanks, Rectangular Tanks, Underground Tanks	8	72
2	Pipes, Silos & Chimneys : Reinforced concrete pipes, Bunkers and Silos, Chimeneys	8	
3	Aqueducts and Box Culverts, Concrete Bridges : Type of load, Impact Effect, Design of T-beam bridge	20	
4	Plate Girders : Design of Web, Design of flanges, Intermediate Vertical Stiffners, Horizontal Stiffners, Bearing Stiffners, Horizontal Stiffners	12	
5	Roof trusses : General, Roof and Side Coverings, Design Loads, Purlins, Members, End Bearings, Industrial Building Frames, Framing, Bracing, Crane Girders and Columns	12	
6	Steel Bridges : Plate girder bridges	12	

Syllabus for B.Tech(Computer Science & Engineering) Up to Fourth

CSE

Second Year - Third Semester

Sl	F	The	Contact				Cr
			L	T	P	Total	
1	HU301	Values & Ethics in Profession	3	0	0	3	3
2	PH301	Physics-2	3	1	0	4	4
3	CH301	Basic Environmental Engineering & Elementary Biology;	3	0	0	3	3
4	CS301	Analog & Digital Electronics	3	0	0	3	3
5	CS302	Data Structure & Algorithm	3	1	0	4	4
6	CS303	Computer Organisation	3	1	0	4	4
		T				?	?
]		otal of					
.	PH	Physi	0	0	?	?	?
8	CS291	Analog & Digital	0		?	?	?
9 1	CS 29	Data Structure & Algorithm Computer Organisation	0		3 ?	? ?	2 2
						1	{
		Total of Practical				?	?

Second Year - Fourth Semester

A. THEORY							
Sl.No.	Field	Theory	Contact Hours/Week				Cr. Points
			L	T	P	Total	
1	M(CS)401	Numerical Methods	2	1	0	3	2
2	M401	Mathematics-3	3	1	0	4	4
3	CS401	Communication Engg & Coding Theory	2 1	0	0	3	3
4 5	CS402 CS403	Formal Language & Automata Theory Computer Architecture	3 3	1 1	0 0	4 4	4 4
Total of Theory						18	17
B. PRACTICAL							
6 7	HU481 M(CS)491	Technical Report Writing & Language Lab Practice	0 0	0 0	3 2	3 2	2 1
8	CS491.	Communication Engg & Coding Theory	0	0	3	3	2
9 10	CS492 CS493	Software Tools Computer Architectur	0 0	0 0	3 3	3 3	2 2
Total of Practical						14	9
Total of Semester						32	26

Syllabus for B.Tech(Computer Science & Engineering) Up to Fourth

Third Year - Fifth Semester

A. THEORY							
Sl. No	**Field**	**Theory**	**Contact Hours/Week**				**Cr. Pts**
			L	**T**	**P**	**Total**	
1	**HU501**	Economics for Engineers	3	0	0	3	3
2	**CS501**	Design & Analysis of Algorithm	3	**1**	0	4	4
3	**CS502**	Microprocessors & Microcontrollers	3	**1**	0	4	4
4	**CS503**	Discrete Mathematics	3	0	0	3	3
5	**Free Elective** **CS504A** **CS504B** **CS504C** **CS504D**	Circuit Theory & Network (ECE) Data Communication (ECE) Digital Signal Processing (ECE Object Oriented Programming (IT)	3	**0/1**	0	3/4	3/4
		Total of Theory				**17/18**	**17-18**
		B. PRACTICAL					
6	**CS591**	Design & Analysis of Algorithm	0	0	3	3	2
7	**CS592**	Microprocessors & Microcontrollers	0	0	3	3	2
8	**CS593**	Programming Practices using C++	1	0	2	3	2
9	**F.E.** **CS594A** **CS594B** **CS594C** **CS594D**	 Circuit Theory & Network (ECE) Data Communication (ECE) Digital Signal Processing (ECE) Object Oriented Programming (IT)	0	0	3	3	2
		Total of Practical				**12**	**8**
		Total of Semester				**29/30**	**25-26**

Third Year - Sixth Semester

A. THEORY							
Sl. No.	**Field**	**Theory**	**Contact Hours/Week**				**Cr. Pts**
			L	**T**	**P**	**Total**	
1	**HU601**	Principles of Management	2	0	0	2	2
2	**CS601**	Data Base Management System	3	0	0	3	3
3	**CS602**	Computer Networks	3	0	0	3	3
4	**CS603**	Operating System	3	0	0	3	3
5	**P.E** **CS604A** **CS604B** **CS604C**	 Information Theory & Coding Computer Graphics ERP	3	0	0	3	3
6	**F. E.** **CS605A** **CS605B** **CS605C**	 Operation Research (M) Human Resource Management (HSS) Multimedia Technology (IT)	3/3	0/1	0/0	3/4	3/4
		Total of Theory				**17/18**	**17-18**
		B. PRACTICAL					
7 8. 9.	**CS691** **CS692** **CS693**	8. Data Base Management System Lab 9. Network Lab 10.Operating System Lab	0 0 0	0 0 0	3 3 3	3 3 3	2 2 2
10	**CS681**	**Seminar**	**0**	**0**	**3**	**3**	**2**
		Total of Practical				**12**	**8**

Total of Semester				**29-30**	**25-26**

Proposed

Fourth Year - Seventh Semester

A. THEORY							
Sl. No.	**Field**	**Theory**	**Contact Hours/Week**				**Cr. Pts**
			L	**T**	**P**	**Total**	
1 2	**CS701** **CS702**	Software Engg. Compiler Design	3 3	0 0	0 0	3 3	3 3
3	**CS703**	A. Pattern Recognition B. Soft Computing C. Artificial Intelligence D. Image Processing	3	**0**	0	3	3
4	**CS704**	A. Distributed Operating System B. Cloud Computing C. Data Warehousing and Data Mining D. Sensor Networks E. Mobile Computing	3	0	0	3	3
5	**CS705**	A. Internet Technology (IT) B. Microelectronics & VLSI Design (ECE) C. Control System (EE) D. Modelling & Simulation (M)	3	0	0	3	3
Total of Theory						**15**	**15**
B. PRACTICAL							
6	**HU781**	Group Discussion	0	0	3	3	2
7	**CS791**	Software Engg. Lab	0	0	3	3	2
8	**CS793**	A. Pattern Recognition B. Soft Computing C. Artificial Intelligence D. Image Processing	0	0	3	3	2
9	**CS795**	A. Internet Technology (IT) B. Microelectronics & VLSI Design (ECE) C. Control System (EE) D. Modelling & Simulation (M)	0	0	3	3	2
10	**CS792**	Industrial training	4 wks during 6th -7 th Sem-break				2
11	**CS794**	Project- 1				3	2
Total of Practical						**15**	**12**

Total of Semester				**30**	**27**

Fourth Year - Eighth Semester

Sl. No.	Field	Theory	Contact Hours/Week				Cr. Pts
			L	T	P	Total	
A. THEORY							
1	**HU801A** **HU801B**	A. Organisational Behaviour B. Project Management	2	0	0	2	2
2	**CS801**	A. Advanced Computer Architecture B. Parallel Computing C. Natural Language Processing D. Cryptography & Network Security E. Business Analytics	3	0	0	3	3
3	**CS802**	A. Technology Management (HSS) B. Cyber Law & Security Policy (HSS) C. Optical Networking (ECE) D. Low Power Circuits & Systems (ECE) E. E-Commerce(IT) F. Robotics(EE & ME)	3	0	0	3	3
Total of Theory						**8**	**8**
B. PRACTICAL							
4	**CS891**	Design Lab / Industrial problem related practical training (Workshop needed)	0	0	6	6	4
5	**CS892**	Project-2	0	0	12	12	6
6	**CS893**	rand Viva					3
Total of Practical						**18**	**13**
Total of Semester						**26**	**21**

SEMESTER - III
Theory

VALUES & ETHICS IN PROFESSION

HU-301
Contracts:3L
Credits- 3

Science, Technology and Engineering as knowledge and as Social and Professional Activities

Effects of Technological Growth:

Rapid Technological growth and depletion of resources, Reports of the Club of Rome. Limits of growth: sustainable development
Energy Crisis: Renewable Energy Resources
Environmental degradation and pollution. Eco-friendly Technologies. Environmental Regulations, Environmental Ethics
Appropriate Technology Movement of Schumacher; later developments
Technology and developing notions. Problems of Technology transfer, Technology assessment impact analysis. Human Operator in Engineering projects and industries. Problems of man, machine, interaction, Impact of assembly line and automation. Human centered Technology.

Ethics of Profession:

Engineering profession: Ethical issues in Engineering practice, Conflicts between business demands and professional ideals. Social and ethical responsibilities of Technologists. Codes of professional ethics. Whistle blowing and beyond, Case studies.

Profession and Human Values:

Values Crisis in contemporary society
Nature of values: Value Spectrum of a good life Psychological
values: Integrated personality; mental health
Societal values: The modern search for a good society, justice, democracy, secularism, rule of law, values in Indian Constitution.
Aesthetic values: Perception and enjoyment of beauty, simplicity, clarity
Moral and ethical values: Nature of moral judgements; canons of ethics; ethics of virtue; ethics of duty; ethics of responsibility.

Books:

1. Stephen H Unger, Controlling Technology: Ethics and the Responsible Engineers, John Wiley & Sons, New York 1994 (2nd Ed)
2. Deborah Johnson, Ethical Issues in Engineering, Prentice Hall, Englewood Cliffs, New Jersey 1991.
3. A N Tripathi, Human values in the Engineering Profession, Monograph published by IIM, Calcutta 1996.

Code: PH-301
Contacts: 4L
Credit: 3+1

Module 1:

Vector Calculus:

1.1 Physical significances of grad, div, curl. Line integral, surface integral, volume integral- physical examples in the context

of electricity and magnetism and statements of Stokes theorem and Gauss theorem [No Proof]. Expression of grad, div, curl and Laplacian in Spherical and Cylindrical co-ordinates. 2L

Module 2 :

Electricity

Coulumbs law in vector form. Electrostatic field and its curl. Gauss's law in integral form and conversion to differential form . Electrostatic potential and field, Poisson's Eqn. Laplace's eqn (Application to Cartesian, Spherically and Cylindrically symmetric systems – effective 1D problems) Electric current, drift velocity, current density, continuity equation, steady current. 5L

Dielectrics-concept of polarization, the relation $D=\varepsilon_0 E+P$, Polarizability. Electronic polarization and polarization in monoatomic and polyatomic gases. 3L

Module 3:

Magnetostatics & Time Varying Field:

3. Lorentz force, force on a small current element placed in a magnetic field. Biot-Savart law and its applications, divergence of magnetic field, vector potential, Ampere's law in integral form and conversion to differential form. Faraday's law of electro-magnetic induction in integral form and conversion to differential form. 3L

Module 4:

Electromagnetic Theory:

4.1 Concept of displacement current Maxwell's field equations, Maxwell's wave equation and its solution for free space. E.M. wave in a charge free conducting media, Skin depth, physical significance of Skin Depth, E.M. energy flow, & Poynting Vector.

6L

Module 5:

Quantum Mechanics:

Generalised coordinates, Lagrange's Equation of motion and Lagrangian, generalised force potential, momenta and energy. Hamilton's Equation of motion and Hamiltonian. Properties of Hamilton and Hamilton's equation of motion.

4L

Course should be discussed along with physical problems of 1-D motion

Concept of probability and probability density, operators, commutator. Formulation of quantum mechanics and Basic postulates, Operator correspondence, Time dependent Schrödinger's equation, formulation of time independent Schrödinger's equation by method of separation of variables, Physical interpretation of wave function ψ (normalization and probability interpretation), Expectation values, Application of Schrödinger equation – Particle in an infinite square well potential (1-D and 3-D potential

well), Discussion on degenerate levels.

9L

Module 6:

Statistical Mechanics:

Concept of energy levels and energy states. Microstates, macrostates and thermodynamic probability, equilibrium macrostate. MB, FD, BE statistics (No deduction necessary), fermions, bosons (definitions in terms of spin, examples), physical significance and application, classical limits of quantum statistics Fermi distribution at zero & non-zero temperature, Calculation of Fermi level in metals, also total energy at absolute zero of temperature and total number of particles, Bose-Einstein statistics – Planck's law of blackbody radiation..

7L

Basic Environmental Engineering & Elementary Biology
Code: CH301
Contacts: 3L = 3
Credits: 3

General

Basic ideas of environment, basic concepts, man, society & environment, their interrelationship.

1L

Mathematics of population growth and associated problems, Importance of population study in environmental engineering, definition of resource, types of resource, renewable, non-renewable, potentially renewable, effect of excessive use vis-à-vis population growth, Sustainable Development.

2L

Materials balance: Steady state conservation system, steady state system with non conservative pollutants, step function.

1L

Environmental degradation: Natural environmental Hazards like Flood, earthquake, Landslide-causes, effects and control/management; Anthropogenic degradation like Acid rain-cause, effects and control. Nature and scope of Environmental Science and Engineering.

2L

Ecology

Elements of ecology: System, open system, closed system, definition of ecology, species, population, community, definition of ecosystem- components types and function. 1L

Structure and function of the following ecosystem: Forest ecosystem, Grassland ecosystem, Desert ecosystem, Aquatic ecosystems, Mangrove ecosystem (special reference to Sundar ban); Food chain [definition and one example of each food chain], Food web. 2L

Biogeochemical Cycle- definition, significance, flow chart of different cycles with only elementary reaction [Oxygen, carbon, Nitrogen, Phosphate, Sulphur]. 1L

Biodiversity- types, importance, Endemic species, Biodiversity Hot-spot, Threats to biodiversity, Conservation of biodiversity. 2L

Air pollution and control

Atmospheric Composition: Troposphere, Stratosphere, Mesosphere, Thermosphere, Tropopause and Mesopause. 1L

Energy balance: Conductive and Convective heat transfer, radiation heat transfer, simple global temperature model [Earth as a black body, earth as albedo], Problems. 1L

Green house effects: Definition, impact of greenhouse gases on the global climate and consequently on sea water level, agriculture and marine food.Global warming and its consequence, Control of Global warming. Earth's heat budget. 1L

Lapse rate: Ambient lapse rate Adiabatic lapse rate, atmospheric stability, temperature inversion (radiation inversion). 2L

Atmospheric dispersion: Maximum mixing depth, ventilation coefficient, effective stack height, smokestack plumes and Gaussian plume model. 2L

Definition of pollutants and contaminants, Primary and secondary pollutants: emission standard, criteria pollutant. Sources and effect of different air pollutants- Suspended particulate matter, oxides of carbon, oxides of nitrogen, oxides of sulphur, particulate, PAN. 2L

Smog, Photochemical smog and London smog.

Depletion Ozone layer: CFC, destruction of ozone layer by CFC, impact of other green house gases, effect of ozone modification. 1L

Standards and control measures: Industrial, commercial and residential air quality standard, control measure (ESP. cyclone separator, bag house, catalytic converter, scrubber (ventury), Statement with brief reference). 1L

Water Pollution and Control

Hydrosphere, Hydrological cycle and Natural water.

Pollutants of water, their origin and effects: Oxygen demanding wastes, pathogens, nutrients, Salts, thermal application, heavy metals, pesticides, volatile organic compounds. 2L

River/Lake/ground water pollution: River: DO, 5 day BOD test, Seeded BOD test, BOD reaction rate constants, Effect of oxygen demanding wastes on river[deoxygenation, reaeration], COD, Oil, Greases, pH. 2L

Lake: Eutrophication [Definition, source and effect]. 1L

Ground water: Aquifers, hydraulic gradient, ground water flow (Definition only) 1L

Standard and control: Waste water standard [BOD, COD, Oil, Grease],

Water Treatment system [coagulation and flocculation, sedimentation and filtration, disinfection, hardness and alkalinity, softening]

Waste water treatment system, primary and secondary treatments [Trickling filters, rotating biological contractor, Activated sludge, sludge treatment, oxidation ponds] tertiary treatment definition.

Utech

Water pollution due to the toxic elements and their biochemical effects: Lead, Mercury, Cadmium, and Arsenic

1L

Land Pollution

Lithosphere; Internal structure of earth, rock and soil 1L

Solid Waste: Municipal, industrial, commercial, agricultural, domestic, pathological and hazardous solid wastes;

Recovery and disposal method- Open dumping, Land filling, incineration, composting, recycling.

Solid waste management and control (hazardous and biomedical waste). 2L

Noise Pollution

Definition of noise, effect of noise pollution, noise classification [Transport noise, occupational noise, neighbourhood noise]

1L

Definition of noise frequency, noise pressure, noise intensity, noise threshold limit value, equivalent noise level,

L_{10} (18 hr Index) , Ld_n .

Noise pollution control. 1L

Environmental Management:

Environmental impact assessment, Environmental Audit, Environmental laws and protection act of India, Different international environmental treaty/ agreement/ protocol. 2L

References/Books

1. Masters, G. M., "Introduction to Environmental Engineering and Science", Prentice-Hall of India Pvt. Ltd., 1991.
2. De, A. K., "Environmental Chemistry", New Age International.

Analog & Digital Electronics
Code: CS301
Contact: 3L Cr:
3

Pre-requisite of Analog Electronics: Basic Electronics Parts I & II learned in the First year, semesters 1 & 2. Basic concept of the working of P-N diodes, Schottky diodes, Basic BJTs, Basic FETs and OPAMP as a basic circuit component. Concept of Feedback.

Module -1: [9L]

1. Different Classes of Amplifiers - (Class-A, B, AB and C - basic concepts, power, efficiency [2L]; Recapitulation of basic concepts of Feedback and Oscillation [1L], Phase Shift, Wein Bridge oscillators [2L]. (5L)
2. Astable & Monostable Multivibrators [1L]; Schimtt Trigger circuits [1L], 555 Timer [2L]. (4L)

[***Learning Outcome***: The learner will be trained to compare the merits and demerits of the different amplifiers and must be able to bias the transistors accordingly; the student must be able to design multivibrator circuits using 555 timers]

Pre-requisite of Digital Electronics: Binary numbers & Basic Boolean algebra – already covered in First year; Logic gates, Truth Tables and function realization – already covered in First year upto minimisation of Logic expressions by algebraic method, K-map,

Module – 2: [11 L]

a) Binary Number System & Boolean Algebra (recapitulation) [1L]; BCD, ASCII, EBDIC, Gray codes and their conversions [1L]; Signed binary number representation with 1's and 2's complement methods [1L], Binary arithmetic, Venn diagram, Boolean algebra (recapitulation) [1L]; Representation in SOP and POS forms [1L]; Minimization of logic expressions by algebraic method. [2L] (7L)

b) Combinational circuits - Adder and Subtractor circuits (half & full adder & subtractor) [2L]; Encoder, Decoder, Comparator, Multiplexer, De-Multiplexer and Parity Generator [2L]. (4L)

Module - 3: [10L]

1. Sequential Circuits - Basic Flip-flop & Latch [1L], Flip-flops -SR, JK, D, T and JK Master-slave Flip Flops [3L], (4L)
2. Registers (SISO,SIPO,PIPO,PISO) [2L], Ring counter, Johnson counter [1L], Basic concept of Synchronous and Asynchronous counters (detail design of circuits excluded), [2L], Design of Mod N Counter [2L] (6L)

Module – 4: [6L]

1. A/D and D/A conversion techniques – Basic concepts (D/A :R-2-R only [2L] A/D: successive approximation [2L]) (4L)
2. Logic families- TTL, ECL, MOS and CMOS - basic concepts. (2L)

[***Learning Outcome***: The student must be able to convert from one number system to another, work out problems related to Boolean algebra, minimisation problems etc. The student must also learn to differentiate between the combinational and sequential circuits and design simple circuits)

Total: 36 hours

Textbooks:

Microelectronics Engineering - Sedra & Smith-Oxford.
Principles of Electronic Devices & circuits—B L Thereja & Sedha—S Chand
Digital Electronics – Kharate – Oxford
Digital Electronics – Logic & Systems by J.Bigmell & R.Donovan; Cambridge Learning. Digital
Logic and State Machine Design (3rd Edition) – D.J.Comer, OUP

Reference:

Electronic Devices & Circuit Theory – Boyelstad & Nashelsky - PHI
Bell-Linear IC & OP AMP—Oxford
P.Raja- Digital Electronics- Scitech Publications
Morries Mano- Digital Logic Design- PHI
R.P.Jain—Modern Digital Electronics, 2/e , Mc Graw Hill
H.Taub & D.Shilling, Digital Integrated Electronics- Mc Graw Hill. D.Ray
Chaudhuri- Digital Circuits-Vol-I & II, 2/e- Platinum Publishers Tocci,
Widmer, Moss- Digital Systems,9/e- Pearson
J.Bignell & R.Donovan-Digital Electronics-5/e- Cenage Learning. Leach &
Malvino—Digital Principles & Application, 5/e, Mc Graw Hill Floyed &
Jain- Digital Fundamentals-Pearson.

Data Structure & Algorithm
Code: CS302
Contacts: 3L +1T
Credits: 4
Pre-requisites: CS 201 (Basic Computation and Principles of C), M101 & M201 (Mathematics), basics of set theory

Module -I. [8L] Linear Data Structure
Introduction (2L):
Why we need data structure?

Concepts of data structures: a) Data and data structure b) Abstract Data Type and Data Type.
Algorithms and programs, basic idea of pseudo-code.
Algorithm efficiency and analysis, time and space analysis of algorithms – order notations.
Array (2L):
Different representations – row major, column major.
Sparse matrix - its implementation and usage. Array representation of polynomials.
Linked List (4L):
Singly linked list, circular linked list, doubly linked list, linked list representation of polynomial and applications.

Module -II: [7L] Linear Data Structure
[Stack and Queue (5L):
Stack and its implementations (using array, using linked list), applications.
Queue, circular queue, dequeue. Implementation of queue- both linear and circular (using array, using linked list), applications.
Recursion (2L):
Principles of recursion – use of stack, differences between recursion and iteration, tail recursion. Applications -
The Tower of Hanoi, Eight Queens Puzzle.

Module -III. [15L] Nonlinear Data structures
Trees (9L):
Basic terminologies, forest, tree representation (using array, using linked list).
Binary trees - binary tree traversal (pre-, in-, post- order), threaded binary tree (left, right, full) - non-recursive traversal algorithms using threaded binary tree, expression tree.
Binary search tree- operations (creation, insertion, deletion, searching).
Height balanced binary tree – AVL tree (insertion, deletion with examples only). B-
Trees – operations (insertion, deletion with examples only).
Graphs (6L):
Graph definitions and concepts (directed/undirected graph, weighted/un-weighted edges, sub-graph, degree, cut-vertex/articulation point, pendant node, clique, complete graph, connected components – strongly connected component, weakly connected component, path, shortest path, isomorphism).
Graph representations/storage implementations – adjacency matrix, adjacency list, adjacency multi-list.
Graph traversal and connectivity – Depth-first search (DFS), Breadth-first search (BFS) – concepts of edges used in DFS and BFS (tree-edge, back-edge, cross-edge, forward-edge), applications.
Minimal spanning tree – Prim's algorithm (basic idea of greedy methods).

Module - IV. Searching, Sorting (10L):
Sorting Algorithms (5L): Bubble sort and its optimizations, insertion sort, shell sort, selection sort, merge sort, quick sort, heap sort (concept of max heap, application – priority queue), radix sort.
Searching (2L): Sequential search, binary search, interpolation search.
Hashing (3L): Hashing functions, collision resolution techniques.

Recommended books:

1. "Data Structures And Program Design In C", 2/E by Robert L. Kruse, Bruce P. Leung.
2. "Fundamentals of Data Structures of C" by Ellis Horowitz, Sartaj Sahni, Susan Anderson-freed.
3. "Data Structures in C" by Aaron M. Tenenbaum.
4. **"**Data Structures" by S. Lipschutz.
5. "Data Structures Using C" by Reema Thareja.
6. "Data Structure Using C", 2/e by A.K. Rath, A. K. Jagadev.
7. **"**Introduction to Algorithms" by Thomas H. Cormen, Charles E. Leiserson, Ronald L. Rivest, Clifford Stein.

Learning outcome:
Ideally this course should act as a primer/pre-requisite for CS 503 (Design and Analysis of Algorithms). On completion of this course, students are expected to be capable of understanding the data structures, their advantages and drawbacks, **how to**

implement them in C, how their drawbacks can be overcome and **what the applications are** and **where they can be used**. Students should be able to learn about the data structures/ methods/algorithms mentioned in the course with a comparative perspective so as to make use of the most appropriate data structure/ method/algorithm in a program

to enhance the efficiency (i.e. reduce the run-time) or for better memory utilization, based on the priority of the implementation. Detailed time analysis of the graph algorithms and sorting methods are expected to be covered in CS 503 but it is expected that the students will be able to understand at least the efficiency aspects of the graph and sorting algorithms covered in this course. The students should be able to convert an inefficient program into an efficient one using the knowledge gathered from this course.

Computer organization
Code: CS303
Contacts: 3L +1T
Credits: 4

Pre-requisite: Concept of basic components of a digital computer, Basic concept of Fundamentals & Programme structures. Basic number systems, Binary numbers, representation of signed and unsigned numbers, Binary Arithmetic as covered in Basic Computation & Principles of Computer Programming Second semester, first year. Boolean Algebra, Karnaugh Maps, Logic Gates – covered in Basic Electronics in First year

Module – 1: [8L]
Basic organization of the stored program computer and operation sequence for execution of a program. Role of operating systems and compiler/assembler. Fetch, decode and execute cycle, Concept of operator, operand, registers and storage, Instruction format. Instruction sets and addressing modes. [7L]

Commonly used number systems. Fixed and floating point representation of numbers. [1L]

Module – 2: [8L]
Overflow and underflow. Design of adders - ripple carry and carry look ahead principles. [3L]

Design of ALU. [1L]
Fixed point multiplication -Booth's algorithm. [1L]
Fixed point division - Restoring and non-restoring algorithms. [2L]
Floating point - IEEE 754 standard. [1L]

Module – 3: [10L]
Memory unit design with special emphasis on implementation of CPU-memory interfacing. [2L]
Memory organization, static and dynamic memory, memory hierarchy, associative memory. [3L]
Cache memory, Virtual memory. Data path design for read/write access. [5L]

Module – 4: [10L]
Design of control unit - hardwired and microprogrammed control. [3L]
Introduction to instruction pipelining. [2L]
Introduction to RISC architectures. RISC vs CISC architectures. [2L]
I/O operations - Concept of handshaking, Polled I/O, interrupt and DMA. [3L]

Learning Outcome:

Additional Tutorial Hours will be planned to meet the following learning outcome.

Through this course, the students will be exposed to extensive development and use of computer organization based concepts for the future knowledge outcome of Advanced Computer Architecture offered in subsequent semester. The students will be able to understand different instruction formats, instruction sets, I/O mechanism. Hardware details, memory technology, interfacing between the CPU and peripherals will be transparent to the students. Students will be able to design hypothetical arithmetic logic unit.

Text Book:

1. Mano, M.M., “Computer System Architecture”, PHI.
2. Behrooz Parhami “ Computer Architecture”, Oxford University Press

Reference Book:

1. Hayes J. P., "Computer Architecture & Organisation", McGraw Hill,
2. Hamacher, "Computer Organisation", McGraw Hill,
3. N. senthil Kumar, M. Saravanan, S. Jeevananthan, "Microprocessors and Microcontrollers" OUP
4. Chaudhuri P. Pal, "Computer Organisation & Design", PHI,
5. P N Basu- "Computer Organization & Architecture" , Vikas Pub

Practical

Physica Lab-2
Code: PH-391
Contacts: (3P)
Credit: (2)

Group 1: Experiments on Electricity and Mangentism

1. Determination of dielectric constant of a given dielectric material.
3. Determination of resistance of ballistic galvanometer by half deflection method and study of variation of logarithmic decrement with series resistance.
4. Determination of the thermo-electric power at a certain temperature of the given thermocouple.
5. Determination of specific charge (e/m) of electron by J.J. Thomson's method.

Group 2: Quantum Physics

6. Determination of Planck's constant using photocell.
7. Determination of Lande'g factor using Electron spin resonance spetrometer.
8. Determination of Stefan's radiation constant
9. Verification of Bohr's atomic orbital theory through Frank-Hertz experiment.
10. Determination of Rydberg constant by studying Hydrogen/ Helium spectrum

Group 3: Modern Physics

11. Determination of Hall co-efficient of semiconductors.
12. Determination of band gap of semiconductors.
13. To study current-voltage characteristics, load response, areal characteristics and spectral response of photo voltaic solar cells.

a) A candidate is required to perform 3 experiments taking one from each group. Initiative should be taken so that most of the Experiments are covered in a college in the distribution mentioned above. Emphasis should be given on the estimation of error in the data taken.

b) In addition a student should perform one more experiments where he/she will have to transduce the output of any of the above experiments or the experiment mentioned in c] into electrical voltage and collect the data in a computer using phoenix or similar interface.

c) Innovative experiment: One more experiment designed by the student or the concerned teacher or both.

Note:

Failure to perform each experiment mentioned in b] and c] should be compensated by two experiments mentioned in the above list.

At the end of the semester report should sent to the board of studies regarding experiments, actually performed by the college, mentioned in b] and c]

Experiment in b] and c] can be coupled and parts of a single experiment.

Recommended Text Books and Reference Books:

For Both Physics I and II

1. B. Dutta Roy (Basic Physics)

2. R.K. Kar (Engineering Physics)
3. Mani and Meheta (Modern Physics)
4.. Arthur Baiser (Perspective & Concept of Modern Physics)

Physics I (PH101/201)
Vibration and Waves
Kingsler and Frey
D.P. Roychaudhury
N.K. Bajaj (Waves and Oscillations)
K. Bhattacharya
R.P. Singh (Physics of Oscillations and Waves)
A.B. Gupta (College Physics Vol.II)
Chattopadhya and Rakshit (Vibration, Waves and Acoustics)

Optics
Möler (Physical Optics)
A.K. Ghatak
E. Hecht (Optics)
E. Hecht (Schaum Series)
F.A. Jenkins and H.E. White
6. Chita Ranjan Dasgupta (Degree Physics Vol 3)

Quantum Physics
Eisberg and Resnick
A.K. Ghatak and S. Lokenathan
S.N. Ghoshal (Introductory Quantum Mechanics)
E.E. Anderson (Modern Physics)
Haliday, Resnick and Crane (Physics vol.III)
Binayak Dutta Roy [Elements of Quantum Mechanics]

Crystallography
1. S.O. Pillai (a. Solid state physics b. Problem in Solid state physics)
2. A.J. Dekker
3. Aschroft and Mermin
4. Ali Omar
5. R.L. Singhal
6. Jak Tareen and Trn Kutty (Basic course in Crystallography

Laser and Holography
A.K. Ghatak and Thyagarajan (Laser)
Tarasov (Laser)
P.K. Chakraborty (Optics)
B. Ghosh and K.G. Majumder (Optics)
B.B. Laud (Laser and Non-linear Optics) Bhattacharyya
[Engineering Physics] Oxford

Physics II(PH 301)

Classical Mechanics (For Module 5.1 in PH 301)
H. Goldstein
A.K. Roychaudhuri
R.G. Takwal and P.S. Puranik
Rana and Joag
M. Speigel (Schaum Series)
J.C. Upadhya (Mechanics)

Electricity and Magnetism
Reitz, Milford and Christy
David J. Griffith

D. Chattopadhyay and P.C. Rakshit
Shadowitz (The Electromagnetic Field)

Quantum Mechanics
Eisberg and Resnick
A.K. Ghatak and S. Lokenathan
S.N. Ghoshal (Introductory Quantum Mechanics)
E.E. Anderson (Modern Physics)
Haliday, Resnick and Crane (Physics vol.III)
Binayak Dutta Roy [Elements of Quantum Mechanics]

Statistical Mechanics
Sears and Sallinger (Kinetic Theory, Thermodynamics and Statistical Thermodynamics)
Mondal (Statistical Physics)
S.N. Ghoshal (Atomic and Nuclear Physics) Singh
and Singh
B.B. Laud (Statistical Mechanics)
F. Reif (Statistical Mechanics)

Dilectrics
Bhattacharyya [Engineering Physics] Oxford

Analog & Digital Electronics
Code: CS391
Contact: 3
Cr: 2

ANALOG: At least any two of the following

1. Design a Class A amplifier
2. Design a Phase-Shift Oscillator
3. Design of a Schmitt Trigger using 555 timer.

DIGITAL : At least any five of the following

1. Design a Full Adder using basic gates and verify its output / Design a Full Subtractor circuit using basic gates and verify its output.
2. Construction of simple Decoder & Multiplexer circuits using logic gates.
3. Realization of RS / JK / D flip flops using logic gates.
4. Design of Shift Register using J-K / D Flip Flop.
5. Realization of Synchronous Up/Down counter.
6. Design of MOD- N Counter
7. Study of DAC .

Any one experiment specially designed by the college.

(Detailed instructions for Laboratory Manual to follow for further guidance. The details will be uploaded in the website from time to time)

Data Structure & Algorithm
Code: CS392
Contacts: 3
Credits: 2

Experiments should include but not limited to :

Implementation of array operations:

Stacks and Queues: adding, deleting elements Circular Queue: Adding & deleting elements Merging Problem :

Evaluation of expressions operations on Multiple stacks & queues :

Implementation of linked lists: inserting, deleting, inverting a linked list. Implementation of stacks & queues

using linked lists:

Polynomial addition, Polynomial multiplication Sparse

Matrices : Multiplication, addition.

Recursive and Nonrecursive traversal of Trees

Threaded binary tree traversal. AVL tree implementation

Application of Trees. Application of sorting and searching algorithms

Hash tables implementation: searching, inserting and deleting, searching & sorting techniques.

(Detailed instructions for Laboratory Manual to follow for further guidance. The details will be uploaded in the website from time to time)

Computer organization
Code: CS393
Contacts: 3
Credits: 2

1. Familiarity with IC-chips, e.g.
a) Multiplexer , b) Decoder, c) Encoder b) Comparator Truth
Table verification and clarification from Data-book.
2. Design an Adder/Subtractor composite unit .
3. Design a BCD adder.
4. Design of a 'Carry-Look-Ahead' Adder circuit.
5. Use a multiplexer unit to design a composite ALU .
6. Use ALU chip for multibit arithmetic operation.
7. Implement read write operation using RAM IC.
8. (a) & (b) Cascade two RAM ICs for vertical and horizontal expansion.

(Detailed instructions for Laboratory Manual to follow for further guidance. The details will be uploaded in the website from time to time)

SEMESTER - IV

Theory

NUMERICAL METHODS
Code: M (CS) 401
Contacts: 2L+1T
Credits: 2

Approximation in numerical computation: Truncation and rounding errors, Fixed and floating-point arithmetic, Propagation of errors. (4)

Interpolation: Newton forward/backward interpolation, Lagrange's and Newton's divided difference Interpolation. (5)

Numerical integration: Trapezoidal rule, Simpson's 1/3 rule, Expression for corresponding error terms. (3)

Numerical solution of a system of linear equations:
Gauss elimination method, Matrix inversion, LU Factorization method, Gauss-Seidel iterative method. (6)

Numerical solution of Algebraic equation:
Bisection method, Regula-Falsi method, Newton-Raphson method.

(4)

Numerical solution of ordinary differential equation: Euler's method, Runge-Kutta methods, Predictor-Corrector methods and Finite Difference method. (6)

Text Books:

1. C.Xavier: C Language and Numerical Methods.
2. Dutta & Jana: Introductory Numerical Analysis.
3. J.B.Scarborough: Numerical Mathematical Analysis.
4. Jain, Iyengar , & Jain: Numerical Methods (Problems and Solution).

References:

1. Balagurusamy: Numerical Methods, Scitech.
2. Baburam: Numerical Methods, Pearson Education.
3. N. Dutta: Computer Programming & Numerical Analysis, Universities Press.
4. Soumen Guha & Rajesh Srivastava: Numerical Methods, OUP.
5. Srimanta Pal: Numerical Methods, OUP.

Subject Name: MATHEMATICS

Code: M 401

Contacts: 3L +1T = 4

Credits: 4

Note 1: The whole syllabus has been divided into five modules. Note

2: Structure of the question paper

There will be three groups in the question paper. In Group A, there will be one set of multiple choice type questions spreading the entire syllabus from which 10 questions (each carrying one mark) are to be answered. From Group B, three questions (each carrying 5 marks) are to be answered out of a set of questions covering all the five modules. Three questions (each carrying 15 marks) are to be answered from Group C. Each question of Group C will have two or three parts covering not more than two modules. Sufficient questions should to be set covering the whole syllabus for alternatives.

Module I

Theory of Probability: Axiomatic definition of probability. Conditional probability. Independent events and related problems. Bayes theorem (Statement only) & its application. One dimensional random variable. Probability distributions-discrete and continuous. Expectation. Binomial, Poisson, Uniform, Exponential, Normal distributions and related problems. t, χ^2 and F-distribution (Definition only). Transformation of random variables. Central Limit Theorem, Law of large numbers (statement only) and their applications. Tchebychev inequalities (statement only) and its application. **(14L)**

Sampling theory: Random sampling. Parameter, Statistic and its Sampling distribution. Standard error of statistic. Sampling distribution of sample mean and variance in random sampling from a normal distribution (statement only) and related problems.

Estimation of parameters: Unbiased and consistent estimators. Point estimation. Interval estimation. Maximum likelihood estimation of parameters (Binomial, Poisson and Normal). Confidence intervals and related problems. **(7L)**

Module III

Testing of Hypothesis: Simple and Composite hypothesis. Critical region. Level of significance. Type I and Type II errors. One sample and two sample tests for means and proportions. χ^2 - test for goodness of fit. **(5L)**

Module IV

Advanced Graph Theory: Planar and Dual Graphs. Kuratowski's graphs. Homeomorphic graphs. Eulers formula (n - e + r = 2) for connected planar graph and its generalisation for graphs with connected components. Detection of planarity. Graph colouring. Chromatic numbers of C_n, K_n , $K_{m,n}$ and other simple graphs. Simple applications of chromatic numbers. Upper bounds of chromatic numbers (Statements only). Chromatic polynomial. Statement of four and five colour theorems. **(10L)**

Module V

Algebraic Structures**:** Group, Subgroup, Cyclic group, Permutation group, Symmetric group (S_3), Coset, Normal subgroup, Quotient group, Homomorphism & Isomorphism

(Elementary properties only).

Definition of Ring, Field, Integral Domain and simple related problems. **(12L)**

Text Books:

1. Banerjee A., De S.K. and Sen S.: Mathematical Probability, U.N. Dhur & Sons.
2. Gupta S. C and Kapoor V K: Fundamentals of Mathematical Statistics, Sultan Chand & Sons.
3. Mapa S.K. :Higher Algebra (Abstract & Linear), Sarat Book Distributors.
4. Sen M.K., Ghosh S. and Mukhopadhyay P.: Topics in Abstract Algebra, University Press.
5. West D.B.: Introduction to Graph Theory, Prentice Hall.

References:

1. Babu Ram: Discrete Mathematics, Pearson Education.
2. Balakrishnan: Graph Theory (Schaum's Outline Series), TMH.
3. Chakraborty S.K and Sarkar B.K.: Discrete Mathematics, OUP.
4. Das N.G.: Statistical Methods, TMH.
5. Deo N: Graph Theory with Applications to Engineering and Computer Science, Prentice Hall.
6. Khanna V.K and Bhambri S.K. : A Course in Abstract Algebra, Vikas Publishing House.
7. Spiegel M R., Schiller J.J. and Srinivasan R.A. : Probability and Statistics (Schaum's Outline Series), TMH.
8. Wilson: Introduction to graph theory, Pearson Edication.

Communication Engineering & Coding Theory
Code: CS401
Contacts: 3L
Credits: 3

Module - 1**:** ***Elements of Communication system, Analog Modulation & Demodulation, Noise, SNR*** **Analog-to-Digital Conversion**. (Basic ideas in brief) [8]

[Details: Introduction to Base Band transmission & Modulation (basic concept) ***(1L);*** Elements of Communication systems (mention of transmitter, receiver and channel); origin of noise and its effect, Importance of SNR in system design ***(1L);*** Basic principles of Linear Modulation (Amplitude Modulation) ***(1L);*** Basic principles of Non-linear modulation (Angle Modulation - FM, PM) ***(1L);*** Sampling theorem, Sampling rate, Impulse sampling, Reconstruction from samples, Aliasing ***(1L);*** Analog

Pulse Modulation - PAM (Natural & flat topped sampling), PWM, PPM ***(1L);*** Basic concept of Pulse Code Modulation, Block diagram of PCM ***(1L);*** Multiplexing - TDM, FDM ***(1L);***

Module - 2**: Digital Transmission:** [8]
[Details: Concept of Quantisation & Quantisation error, Uniform Quantiser ***(1L);*** Non-uniform Quantiser, A-law & □□law companding (mention only) ***(1L);*** Encoding, Coding efficiency ***(1L);*** Line coding & properties, NRZ & RZ, AMI, Manchester coding PCM, DPCM ***(1L);*** Baseband Pulse Transmission, Matched filter (mention of its importance and basic concept only), Error rate due to noise ***(2L);*** ISI, Raised cosine function, Nyquist criterion for distortion-less base-band binary transmission, Eye pattern, Signal power in binary digital signals ***(2L);***

Module - 3**: Digital Carrier Modulation & Demodulation Techniques:** [8]
[Details: Bit rate, Baud rate ***(1L);*** Information capacity, Shanon's limit ***(1L);*** M-ary encoding, Introduction to the different digital modulation techniques - ASK, FSK, PSK, BPSK, QPSK, mention of 8 BPSK, 16 BPSK ***(2L);*** Introduction to QAM, mention of 8QAM, 16 QAM without elaboration ***(1L);*** Delta modulation, Adaptive delta modulation (basic concept and importance only, no details ***(1L);*** introduction to the concept of DPCM, Delta Modulation, Adaptive Delta modulation and their relevance ***(1L);*** Spread Spectrum Modulation - concept only. ***(1L)***.

Module - 4**: Information Theory & Coding**: [8]
[Details: Introduction, News value & Information content ***(1L);***, Entropy ***(1L);***, Mutual information ***(1L);***, Information rate ***(1L);***, Shanon-Fano algorithm for encoding ***(1L);***, Shannon's Theorem - Source Coding Theorem ***(1L);***, Channel Coding Theorem, Information Capacity Theorem (basic understanding only) ***(1L);***; Error Control & Coding - basic principle only. ***(1L);***

Text Books:

1. An Introduction to Analog and Digital Communications by Simon Haykin; Published by Wiley India.
2. Data Communication and Networking by Behrouz A. Forouzan, Published by Tata McGraw-Hill

References:

1. Communication Systems 4th Edition by Simon Haykin; Published by Wiley India (Student Edition)
2. Principles and Analog and Digital Communication by Jerry D Gibson, Published by MacMillan.
3. Communication Systems by A. B. Carlson, Published by McGraw-Hill.
4. Understanding Signals and Systems by Jack Golten, Published by McGraw Hill.

Learning Outcome: [These are the minimum competence to be developed; the students will be encouraged to learn more and acquire better understanding.]
Module -1: The student will be able to differentiate between base-band transmission and modulation and **compute antenna size** from knowledge of carrier frequency; (Tutorial: To identify different communication processes based on these two methods and appreciate their relative merit and demerit); The learner will be able to **determine the carrier and message frequencies** from the expression for AM signals and Angle modulated signals. Given an expression for a modulated signal, the student must be able to **recognize the type of modulation**. The ability to explain each and every block of the PCM system must be acquired.

Module -2: The student must be able to appreciate the importance of digital modulation over analog modulation in respect of noise immunity (concept); The student will be able to compute the coding efficiency of binary and decimal coding systems; The relative merits and demerits of the different digital modulation techniques to be understood clearly; (Tutorial: Students should be encouraged to find out where these different modulation techniques are used in everyday life); Capability to calculate signal power in digital systems to be mastered.

Module -3: Ability to compute bit rate and baud rate for different signals to be developed; the student must be able to compare between the channel capacity in case of channels of varying band-width and SNR value and predict the maximum data rate possible; The learner must be able to compare the merits and short comings of the basic digital modulation techniques. (Tutorial: Find out the area of application for each with reason for such application)

Module -4: Student will be able to calculate the information content, entropy and information rate for given situations; He/she

will be able to appreciate the importance of the different line coding and error coding techniques. (Tutorial: Find out the range of applicability).

Formal Language & Automata Theory

Code: CS402
Contacts: 3L+1T
Credits: 4

Prerequisites of Formal Language & Automata Theory:
Elementary discrete mathematics including the notion of set,function,relation,product,partial order,equivalence relation,graph& tree. They should have a thorough understanding of the principle of mathematical induction.

Module-1: [**13 L**]
Fundamentals: Basic definition of sequential circuit, block diagram, mathematical representation, concept of transition table and transition diagram (Relating of Automata concept to sequential circuit concept) Design of sequence detector, Introduction to finite state model [2L]
Finite state machine: Definitions, capability & state equivalent, kth- equivalent concept [1L]
Merger graph, Merger table, Compatibility graph [1L]
Finite memory definiteness, testing table & testing graph. [1L]
Deterministic finite automaton and non deterministic finite automaton. [1L] Transition diagrams and Language recognizers. [1L]
Finite Automata: NFA with Î transitions - Significance, acceptance of languages. [1L]
Conversions and Equivalence: Equivalence between NFA with and without Î transitions. NFA to DFA conversion. [2L]
Minimization of FSM, Equivalence between two FSM's , Limitations of FSM [1L] Application of finite automata, Finite Automata with output- Moore & Melay machine. [2L]

Learning outcome of Finite Automata:
The student will be able to define a system and recognize the behavior of a system. They will be able to minimize a system and compare different systems.

Module-2: [8 L]
Regular Languages : Regular sets. [1L]
Regular expressions, identity rules. Arden's theorem state and prove [1L]
Constructing finite Automata for a given regular expressions, Regular string accepted by NFA/DFA [1L]
Pumping lemma of regular sets. Closure properties of regular sets (proofs not required). [1L]
Grammar Formalism: Regular grammars-right linear and left linear grammars. [1L]
Equivalence between regular linear grammar and FA. [1L]
Inter conversion, Context free grammar. [1L]
Derivation trees, sentential forms. Right most and leftmost derivation of strings. (Concept only) [1L]

Learning outcome of Regular Languages and Grammar:
Student will convert Finite Automata to regular expression. Students will be able to check equivalence between regular linear grammar and FA.

Module-3: [9L]
Context Free Grammars, Ambiguity in context free grammars. [1L]
Minimization of Context Free Grammars. [1L]
Chomsky normal form and Greibach normal form. [1L]
Pumping Lemma for Context Free Languages. [1L]
Enumeration of properties of CFL (proofs omitted). Closure property of CFL, Ogden's lemma & its applications [1L]
Push Down Automata: Push down automata, definition. [1L]
Acceptance of CFL, Acceptance by final state and acceptance by empty state and its equivalence. [1L]
Equivalence of CFL and PDA, interconversion. (Proofs not required). [1L]
Introduction to DCFL and DPDA. [1L]

Learning outcome of PDA and context free grammar:
Students will be able to minimize context free grammar. Student will be able to check equivalence of CFL and PDA. They

will be able to design Turing Machine.

Module-4: [6L]

Turing Machine : Turing Machine, definition, model [1L]
Design of TM, Computable functions [1L] Church's hypothesis, counter machine [1L]
Types of Turing machines (proofs not required) [1 L]
Universal Turing Machine, Halting problem [2L]

Learning outcome of Turing Machine :

Students will be able to design Turing machine.

TEXT BOOKS:

"Introduction to Automata Theory Language and Computation", Hopcroft H.E. and Ullman J. D., Pearson Education.
"Theory of Computer Science ", Automata Languages and computation", Mishra and Chandrashekaran, 2nd edition, PHI.
"Formal Languages and Automata Theory", C.K.Nagpal, Oxford

REFERENCES:

"Switching & Finite Automata", ZVI Kohavi, 2nd Edn., Tata McGraw Hill
"Introduction to Computer Theory", Daniel I.A. Cohen, John Wiley
"Introduction to languages and the Theory of Computation", John C Martin, TMH
"Elements of Theory of Computation", Lewis H.P. & Papadimitrou C.H. Pearson, PHI.

Computer Architecture
Code: CS403
Contacts: 3L+1T
Credits: 4

Pre-requisite: Basic Electronics in First year, Introduction to Computing in second semester, Analog & Digital Electronics and Computer Organisation in Third semester.

Module – 1: [12 L]
Introduction: Review of basic computer architecture (Revisited), Quantitative techniques in computer design, measuring and reporting performance. (3L)
Pipelining: Basic concepts, instruction and arithmetic pipeline, data hazards, control hazards and structural hazards, techniques for handling hazards. Exception handling. Pipeline optimization techniques; Compiler techniques for improving performance. (9L)

Module – 2: [8L]
Hierarchical memory technology: Inclusion, Coherence and locality properties; Cache memory organizations, Techniques for reducing cache misses; Virtual memory organization, mapping and management techniques, memory replacement policies. (8L)

Module – 3: [6L]
Instruction-level parallelism: basic concepts, techniques for increasing ILP, superscalar, superpipelined and VLIW processor architectures. Array and vector processors. (6L)

Module – 4: [12 L]
Multiprocessor architecture: taxonomy of parallel architectures; Centralized shared- memory architecture: synchronization, memory consistency, interconnection networks. Distributed shared-memory architecture. Cluster computers. (8L)

Non von Neumann architectures: data flow computers, reduction computer architectures, systolic architectures. (4L)

Learning Outcome:

This course is a formidable prerequisite for the course Operating System to be offered in the subsequent semester. Text books:
[To be detailed]

Practical

Technical Report Writing & Language Lab Practice
Code: HU481
Cr-2

Guidelines for Course Execution:

Objectives of this Course: This course has been designed:

1. **To inculcate a sense of confidence in the students.**
2. **To help them become good communicators both socially and professionally.**
3. **To assist them to enhance their power of Technical Communication.**

Detailed Course Outlines:

A. ***Technical Report Writing*** : 2L+6P

1. Report Types (Organizational / Commercial / Business / Project)
2. Report Format & Organization of Writing Materials
3. Report Writing (Practice Sessions & Workshops)

B. Language Laboratory Practice

I. Introductory Lecture to help the students get a clear idea of Technical Communication & the need of Language Laboratory
Practice Sessions 2L
2. Conversation Practice Sessions: (To be done as real life interactions) 2L+4P
a) Training the students by using Language Lab Device/Recommended Texts/cassettes /cd's to get their Listening Skill & Speaking Skill honed
b) Introducing Role Play & honing over all Communicative Competence
3. Group Discussion Sessions: 2L+6P
a) Teaching Strategies of Group Discussion
b) Introducing Different Models & Topics of Group Discussion
c) Exploring Live /Recorded GD Sessions for mending students' attitude/approach & for taking remedial measure
Interview Sessions; 2L+6P

- ***a) Training students to face Job Interviews confidently and successfully***
- ***b) Arranging Mock Interviews and Practice Sessions for integrating Listening Skill with Speaking Skill in a formal situation for effective communication***

4. Presentation: 2L+6P
a) Teaching Presentation as a skill
b) Strategies and Standard Practices of Individual /Group Presentation
c) Media & Means of Presentation: OHP/POWER POINT/ Other Audio-Visual Aids

5. Competitive Examination: 2L+2P
a) Making the students aware of Provincial /National/International Competitive Examinations
b) Strategies/Tactics for success in Competitive Examinations
c) SWOT Analysis and its Application in fixing Target

Books – Recommended:

Nira Konar: English Language Laboratory: A Comprehensive Manual
PHI Learning, 2011
D. Sudharani: Advanced Manual for Communication Laboratories &

Technical Report Writing Pearson Education (W.B. edition), 2011

References:

Adrian Duff et. al. (ed.): Cambridge Skills for Fluency

A) Speaking (Levels 1-4 Audio Cassettes/Handbooks)

B) Listening (Levels 1-4 Audio Cassettes/Handbooks)

Cambridge University Press 1998

Mark Hancock: English Pronunciation in Use

4 Audio Cassettes/CD'S OUP 2004

NUMERICAL METHODS Lab
Code : M(CS) 491
Contacts : 2L
Credits :1

1. Assignments on Newton forward /backward, Lagrange's interpolation.
2. Assignments on numerical integration using Trapezoidal rule, Simpson's 1/3 rule, Weddle's rule.
3. Assignments on numerical solution of a system of linear equations using Gauss elimination and Gauss-Seidel iterations.
4. Assignments on numerical solution of Algebraic Equation by Regular-falsi and Newton Raphson methods.
5. Assignments on ordinary differential equation: Euler's and Runga-Kutta methods.
6. Introduction to Software Packages: Matlab / Scilab / Labview / Mathematica.

Communication Engineering & Coding Theory
Code : CS 491
Contacts : 3L
Credits :2

Practical Designs & Experiments:
Module - 1: Generation of Amplitude Modulation (Design using transistor or Balanced Modulator Chip (to view the wave shapes)
Module - 2: Generation of FM using VCO chip (to view the wave shapes) Module
- 3: Generation of PAM
Module - 4: Generation of PWM & PPM (using IC 555 Timer)

Software Tools
Code : CS 492
Contacts : 3L
Credits :2

[Suggested; Feedback invited]

1. Introduction to Visual Basic/VC++ & difference with BASIC. Concept about form Project, Application, Tools, Toolbox,

i. Controls & Properties. Idea about Labels, Buttons, Text Boxes.

ii. Data basics, Different type variables & their use in VB,

iii. Sub-functions & Procedure details, Input box () & Msgbox ().

iv. Making decisions, looping

v. List boxes & Data lists, List Box control, Combo Boxes, data Arrays.
vi. Frames, buttons, check boxes, timer control,
vii. Programming with data, ODBC data base connectivity.

viii. Data form Wizard, query, and menus in VB Applications,
ix. Graphics.

2. Case studies using any of the following items including relevant form design with the help of visual programming aids.
   a) Payroll accounting system.
   b) Library circulation management system.
   c) Inventory control system.
   d) University examination & grading system.
   e) Patient information system.
   f) Tourist information system.
   g) Judiciary information system.
   h) Flight reservation system.
   i) Bookshop automation software.
   j) Time management software.

Computer Architecture
Code : CS 492 Contacts :
3L
Credits :2

All laboratory assignments are based on Hardware Description Language (VHDL or Verilog) Simulation.
[Pre-requisite: The hardware based design has been done in the Analog & Digital Electronics laboratory and Computer Organisation laboratory]

1. HDL introduction
2. Basic digital logic base programming with HDL
3. 8-bit Addition, Multiplication, Division
4. 8-bit Register design
5. Memory unit design and perform memory operatons.
6. 8-bit simple ALU design
7. 8-bit simple CPU design
8. Interfacing of CPU and Memory

SEMESTER – V

Theory

Economics for Engineers
HU-501
Contracts: 3L
Credits- 3

Module-I

1. Economic Decisions Making – Overview, Problems, Role, Decision making process.
2. Engineering Costs & Estimation – Fixed, Variable, Marginal & Average Costs, Sunk Costs, Opportunity Costs, Recurring And Nonrecurring Costs, Incremental Costs, Cash Costs vs Book Costs, Life-Cycle Costs; Types Of Estimate, Estimating Models - Per- Unit Model, Segmenting Model, Cost Indexes, Power-Sizing Model, Improvement & Learning Curve, Benefits.

Module-II

3. Cash Flow, Interest and Equivalence: Cash Flow – Diagrams, Categories & Computation, Time Value of Money, Debt repayment, Nominal & Effective Interest.
4. Cash Flow & Rate Of Return Analysis – Calculations, Treatment of Salvage Value, Annual Cash Flow Analysis, Analysis Periods; Internal Rate Of Return, Calculating Rate of Return, Incremental Analysis; Best Alternative Choosing An Analysis Method, Future Worth Analysis, Benefit-Cost Ratio Analysis, Sensitivity And Breakeven Analysis. Economic Analysis In The Public Sector - Quantifying And Valuing Benefits & drawbacks.

Module-III

5. Inflation And Price Change – Definition, Effects, Causes, Price Change with Indexes, Types of Index, Composite vs Commodity Indexes, Use of Price Indexes In Engineering Economic Analysis, Cash Flows that inflate at different Rates.
6. Present Worth Analysis: End-Of-Year Convention, Viewpoint Of Economic Analysis Studies, Borrowed Money Viewpoint, Effect Of Inflation & Deflation, Taxes, Economic Criteria, Applying Present Worth Techniques, Multiple Alternatives.
7. Uncertainty In Future Events - Estimates and Their Use in Economic Analysis, Range Of Estimates, Probability, Joint Probability Distributions, Expected Value, Economic Decision Trees, Risk, Risk vs Return, Simulation, Real Options.

Module-IV

8. Depreciation - Basic Aspects, Deterioration & Obsolescence, Depreciation And Expenses, Types Of Property, Depreciation Calculation Fundamentals, Depreciation And Capital Allowance Methods, Straight-Line Depreciation Declining Balance Depreciation, Common Elements Of Tax Regulations For Depreciation And Capital Allowances.
9. Replacement Analysis - Replacement Analysis Decision Map, Minimum Cost Life of a New Asset, Marginal Cost, Minimum Cost Life Problems.
10. Accounting – Function, Balance Sheet, Income Statement, Financial Ratios Capital Transactions, Cost Accounting, Direct and Indirect Costs, Indirect Cost Allocation.

Readings

1. James L.Riggs,David D. Bedworth, Sabah U. Randhawa : Economics for Engineers 4e , Tata McGraw-Hill
2. Donald Newnan, Ted Eschembach, Jerome Lavelle : Engineering Economics Analysis, OUP
3. John A. White, Kenneth E.Case,David B.Pratt : Principle of Engineering Economic Analysis, John Wiley
4. Sullivan and Wicks: Engineering Economy, Pearson
5. R.Paneer Seelvan: Engineering Economics, PHI
6. Michael R Lindeburg : Engineering Economics Analysis, Professional Pub

Syllabus for B.Tech(Computer Science & Engineering) Up to Fourth

Revised Syllabus of B.Tech CSE (for the students who were admitted in Academic Session 2010-

Design & Analysis of Algorithm
Code: CS501

Contact: 3L + 1T
Credits: 4

Complexity Analysis:[2L]
Time and Space Complexity, Different Asymptotic notations – their mathematical significance
Algortihm Design Techniques:
Divide and Conquer: [3L]
Basic method, use, Examples – Binary Search, Merge Sort, Quick Sort and their complexity. Heap Sort and its complexity [1L]
Dynamic Programming: [3L]
Basic method, use, Examples – Matrix Chain Manipulation, All pair shortest paths, single source shortest path. Backtracking: [2L]
Basic method, use, Examples – 8 queens problem, Graph coloring problem. Greedy Method: [3L]
Basic method, use, Examples – Knapsack problem, Job sequencing with deadlines, Minimum cost spanning ree by Prim's and Kruskal's algorithm.

Lower Bound Theory: [1L]
O(nlgn) bound for comparison sort

Disjoint set manipulation: [2L]
Set manipulation algorithm like UNION-FIND, union by rank.

Graph traversal algorithm: Recapitulation [1L]
Breadth First Search(BFS) and Depth First Search(DFS) – Classification of edges - tree, forward, back and cross edges – complexity and comparison

String matching problem: [3L]
Different techniques – Naive algorithm, string matching using finite automata, and Knuth, Morris, Pratt (KMP) algorithm with their complexities.

Amortized Analysis: [3L]
Aggregate, Accounting, and Potential Method.

Network Flow: [3L]
Ford Fulkerson algorithm, Max-Flow Min-Cut theorem (Statement and Illustration)

Matrix Manipulation Algorithm: [3L]
Strassen's matrix manipulation algorithm; application of matrix multiplication to solution of simultaneous linear equations using LUP decomposition, Inversion of matrix and Boolean matrix multiplication

Notion of NP-completeness: [3L]
P class, NP class, NP hard class, NP complete class – their interrelationship, Satisfiability problem, Cook's theorem (Statement only), Clique decision problem

Approximation Algorithms: [3L]
Necessity of approximation scheme, performance guarantee, polynomial time approximation schemes, vertex cover problem, travelling salesman problem.

Text Book:
1. T. H. Cormen, C. E. Leiserson, R. L. Rivest and C. Stein, "Introduction to Algorithms"

2. A. Aho, J.Hopcroft and J.Ullman "The Design and Analysis of Algorithms"

D.E.Knuth "The Art of Computer Programming", Vol. 3

Jon Kleiberg and Eva Tardos, "Algorithm Design"

Reference:
K.Mehlhorn , "Data Structures and Algorithms" - Vol. I & Vol. 2.
S.Baase "Computer Algorithms"
E.Horowitz and Shani "Fundamentals of Computer Algorithms"
E.M.Reingold, J.Nievergelt and N.Deo- "Combinational Algorithms- Theory and Practice", Prentice Hall, 1997

Microprocessors & Microcontrollers
Code: CS502
Contact: 3L + 1T
Credits: 4

Module -1: **[8L]**
Introduction to Microcomputer based system. History of evolution of Microprocessor and Microcontrollers and their advantages and disadvantages. [1L]
Architecture of 8085 Microprocessor, Pin description of 8085. [2L]
Address/data bus Demultiplexing , Status Signals and the control signals. [1L] Instruction set of 8085 microprocessor, Addressing modes, [3L]
Timing diagram of the instructions (a few examples). [1L]

Module -2: **[9L]**
Assembly language programming with examples, Counter and Time Delays, Stack and Subroutine, [6L]
Interrupts of 8085 processor(software and hardware), I/O Device Interfacing-I/O Mapped I/O and Memory Mapped I/O , Serial (using SID and SOD pins and RIM, SIM Instructions) and Parallel data transfer, [3L]

Module 3: **[10L]**
The 8086 microprocessor- Architecture, Addressing modes, Interrupts [3L]
Introduction to 8051 Microcontroller –Architecture, Pin Details. [3L]
Addressing modes, Instruction set, Examples of Simple Assembly Language. [4L]

Module -4: **[9L]**
Memory interfacing with 8085, 8086 [2L]
Support IC chips- 8255 ,8251,8237/8257,8259 [4L]
Interfacing of 8255 PPI with 8085 and Microcontroller 8051. [2L]
Brief introduction to PIC microcontroller (16F877) [1L]

Learning Outcome:
Additional Tutorial Hours will be planned to meet the following learning outcome.

Through this course, the students will be exposed to hardware details of 8085 microprocessor with the related signals and their implications. They will also learn programming and interfacing of 8085. The students will understand the difference between the architecture of 8085 and 8086. They will also be aware of the 8051 architecture and its programming. Lastly the students will have a basic idea on PIC microcontroller (16F877)

TEXTS :
1. Microprocessors and microcontrollers - N. Senthil Kumar, M. Saravanan and Jeevananthan (Oxford university press)
2. 8051 Microcontroller – K. Ayala (Cengage learning)
3. MICROPROCESSOR architecture, programming and Application with 8085 - R.Gaonkar (Penram international Publishing LTD.)
4.Microcontrollers:Principles&Applications , Ajit Pal, PHI 2011.
5. Naresh Grover, "Microprocessor comprehensive studies Architecture, Programming and Interfacing"Dhanpat Rai, 2003
6. 8051 Microprocessor –V. Udayashankara and M.S Mallikarjunaswami (TMH).
7. Microprocessor 8085 and its Interfacing—S Mathur (PHI)
8. An Introduction to Microprocessor and Applications –Krishna Kant (Macmillan)

Reference:
1. 8086 Microprocessor –K Ayala (Cengage learning)
2. The 8085 Microprocessor, Architecture, Programming and Interfacing- K Uday Kumar, B .S Umashankar (Pearson)
3. The X-86 PC Assembly language, Design and Interfacing - Mazidi, Mazidi and Causey (PEARSON)
4. The 8051 microcontroller and Embedded systems - Mazidi, Mazidi and McKinley (PEARSON)
5. Microprocessors – The 8086/8088, 80186/80386/80486 and the Pentium family – N. B. Bahadure (PHI).
6. The 8051 microcontrollers – Uma Rao and Andhe Pallavi (PEARSON).

Discrete Mathematics

Code: CS503 Contact: 3L

Credits: 3

Module I: Introduction to Propositional Calculus: Propositions, Logical Connectives, Conjunction, Disjunction, Negation and their truth table. Conditional Connectives, Implication, Converse, Contrapositive, Inverse, Biconditional statements with truth table, Logical Equivalence, Tautology, Normal forms-CNF, DNF; Predicates and Logical Quantifications of propositions and related examples. 10L

Module II: Theory of Numbers: Well Ordering Principle, Divisibility theory and properties of divisibility; Fundamental theorem of Arithmetic; Euclidean Algorithm for finding G.C.D and some basic properties of G.C.D with simple examples; Congruences, Residue classes of integer modulo $n\ (Z_n)$ and its examples.Order, Relation and Lattices: POSET, Hasse Diagram, Minimal ,

Maximal, Greatest and Least elements in a POSET, Lattices and its properties, Principle of Duality, Distributive and Complemented Lattices. 10L

Module III: Counting Techniques: Permutations, Combinations, Binomial coefficients, Pigeon- hole Principle, Principles of inclusion and exclusions; Recurrence relations: Formulation/Modelling of different counting problems in terms of recurrence relations, Solution of linear recurrence relations with constant coefficients (upto second order) by (i) The iterative method (ii) Characteristic roots method (iii) Generating functions method. 10L

Module IV: Graph Coloring: Chromatic Numbers and its bounds, Independence and Clique Numbers, Perfect Graphs-Definition and examples, Chromatic polynomial and its determination, Applications of Graph Coloring.

Matchings: Definitions and Examples of Perfect Matching, Maximal and Maximum Matching, Hall's Marriage Theorem (Statement only) and related problems. 6

Texts:

1. Russell Merris, Combinatorics, Wiley-Interscience series in Discrete Mathematics and Optimisation
2. N. Chandrasekaran and M. Umaparvathi, Discrete Mathematics, PHI
3. Gary Haggard, John Schlipf and Sue Whitesides, Discrete Mathematics for Computer Science, CENGAGE Learning
4. Gary Chartrand and Ping Zhang – Introduction to Graph Theory, TMH

References:

8. J.K. Sharma, Discrete Mathematics, Macmillan
9. Winfried Karl Grassmann and Jean-Paul Tremblay, Logic and Discrete Mathematics, PEARSON.
10. S. K. Chakraborty and B. K. Sarkar, Discrete Mathematics, OXFORD University Press.
11. Douglas B. West, Introduction to graph Theory, PHI

Free Elective

Circuit Theory & Network
Code: CS504A
Contact: 3L + 1T
Credits: 4

Module	Content	Hrs
1.	**a)** ***Resonant Circuits***: Series and Parallel resonance [1L], (*) ***Impedance and Admittance Characteristics, Quality Factor, Half Power Points, Bandwidth [2L], Phasor diagrams, Transform diagrams [1L], Practical resonant and series circuits, Solution of Problems [Tutorial - 1L]***. **b) Mesh Current Network Analysis**: Kirchoff's Voltage law, Formulation of mesh equations [1L], Solution of mesh equations by Cramer's rule and matrix method [2L], Driving point impedance, Transfer impedance [1L], Solution of problems with DC and AC sources [1L].	4 6
2.	**a) Node Voltage Network Analysis**: Kirchoff's Current law, Formulation of Node equations and solutions [2L], driving point admittance, transfer Admittance [1L], Solution of problems with DC and AC sources [1L]. **b) Network Theorems**: Definition and Implication of Superposition Theorem [1L], Thevenin's theorem, Norton's theorem [1L], Reciprocity theorem, Compensation theorem [1L], maximum Power Transfer theorem [1L], Millman's theorem, Star delta transformations [1L], Solutions and problems with DC and AC sources [1L].	4 6
3.	***Graph of Network***: Concept of Tree and Branch [1L], tree link, junctions, ***(*) Incident matrix, Tie set matrix [2L], Determination of loop current and node voltages [2L]***. **Coupled Circuits**: Magnetic coupling, polarity of coils, polarity of induced voltage, concept of Self and mutual inductance, Coefficient of coupling, Solution of Problems. **Circuit transients**: DC transients in R-L and R-C Circuits with and without initial charge, ***(*) R-L-C Circuits, AC Transients in sinusoidal R-L, R-C and R-L-C Circuits, Solution of Problems [2L].***	4 4 2

4.	**Laplace transform**: Concept of Complex frequency [1L], transform of f(t) into F(s) [1L], transform of step, exponential, over damped surge, critically damped surge, damped and un-damped sine functions [2L], properties of Laplace transform [1L], linearity, real differentiation, real integration, initial value theorem and final value theorem [1L], inverse Laplace transform [1L], application in circuit analysis, Partial fraction expansion, Heaviside's expansion theorem, solution of problems [1L].	8

	(*) Laplace transform and Inverse Laplace transform [2L]. **Two Port Networks**: Relationship of Two port network variables, short circuit admittance parameters, open circuit impedance parameters, transmission parameters, relationship between parameter sets, network functions for ladder network and general network.	4

Old module 9 viz. SPICE deleted for consideration in Sessional Subject.

Problems for Module 1a:

Ex. 1. A parallel RLC Circuit has R= 100 K Ohms, L= 10 mH, C= 10 nF. Find resonant frequency, bandwidth and Quality factor. **Ex. 2.** Two coils one of R= 0.51 Ohms,L= 32 mH, other of R= 1.3 Ohms, L= 15 mH, and two capacitors of 25 micro F and 62 micro F are in series with a resistance of 0.24 Ohms. Determine resonance frequency and Q of each coil.

Ex. 3. In a series circuit with R= 50 Ohms, l= 0.05 Ohms and C= 20 micro F, frequency of the source is varied till the voltage across the capacitor is maximum. If the applied voltage is 100 V, find the maximum voltage across the capacitor and the frequency at which this occurs. Repeat the problem with R= 10 Ohms.

Problems for Module 1b and 2:

Examples for mesh current in networks like T, π, bridged T and combination of T and π.

See Annexure-1 for the figures

Problems for Module- 2a:

Ex.1. The network of Fig.1 – Mod.4 is in the zero state until t= 0when switch is closed. Find the current i1(t) in the resistor R3. Hints: the Fig.1 – Mod.4 shows the same network in terms of transform impedance with the Thevenin equivalent network.

.

Ex.2. Find the Norton's equivalent circuit for the circuit Fig.2 – Mod.4.

Hints: As a 1st. step, short the terminals ab. This results in the Circuit of Fig.2.(a). By applying KCL at node a, we have, (0-24)/4+ isc = 0; i.e isc= 9 A. To find out the equivalent Norton's impedance RN, deactivate all the independent sources, resulting in a circuit of Fig.2.(b), RN= (4x12)/(4+12) = 3 Ohms. Thus we obtain Norton equivalent circuit of Fig.2 (c).

Problems for Module – 2b:

Ex.1. Draw the graph, one tree and its co tree for the circuit shown in Fig.1 – mod.5.

Hints: In the circuit there are four nodes (N= 4) and seven branches (B= 7). The graph is so drawn and appears as in Fig. 1 (a). Fig.1(b) shows one tree of graph shown in Fig. 1(a). The tree is made up of branches 2, 5 and 6. The co tree for the tree of Fig.1 (b) is shown in Fig. 1(c). The co tree has L= B-N+1 = 7-4+1 = 4 Links.

Ex.2. (a). For the circuit shown in Fig.2- Mod.5, construct a tree so that i1 is a link current. Assign a complete set of link currents and find i1 (t).

(b). Construct another tree in which v1 is a tree branch voltage. Assign a complete set of tree branch voltages and v1 (t).

Take i(t) = 25 sin 1000t A, v(t)= 15 cos 1000t.

Tutorials: (*):Bold and Italics. Text

Books:

1. Valkenburg M. E. Van, "Network Analysis", Prentice Hall./Pearson Education
2. Hayt "Engg Circuit Analysis" 6/e Tata McGraw-Hill
3. D.A.Bell- Electrical Circuits- Oxford

Reference Books:

1. A.B.Carlson-Circuits- Cenage Learning
2. John Bird- Electrical Circuit Theory and Technology- 3/e- Elsevier (Indian Reprint)
3. Skilling H.H.: "Electrical Engineering Circuits", John Wiley & Sons.
4. Edminister J.A.: "Theory & Problems of Electric Circuits", McGraw-Hill Co.
5. Kuo F. F., "Network Analysis & Synthesis", John Wiley & Sons.
6. R.A.DeCarlo & P.M.Lin- Linear Circuit Analysis- Oxford
7. P.Ramesh Babu- Electrical Circuit Analysis- Scitech
8. Sudhakar: "Circuits & Networks:Analysis & Synthesis" 2/e TMH
9. M.S.Sukhija & T.K.NagSarkar- Circuits and Networks-Oxford
10. Sivandam- "Electric Circuits and Analysis", Vikas
11. V.K. Chandna, "A Text Book of Network Theory & Circuit Analysis",Cyber Tech
12. Reza F. M. and Seely S., "Modern Network Analysis", Mc.Graw Hill .
13. M. H. Rashid: "Introduction to PSpice using OrCAD for circuits and electronics", Pearson/PHI
14. Roy Choudhury D., "Networks and Systems", New Age International Publishers.
15. D.Chattopadhyay and P.C.Rakshit: "Electrical Circuits" New Age

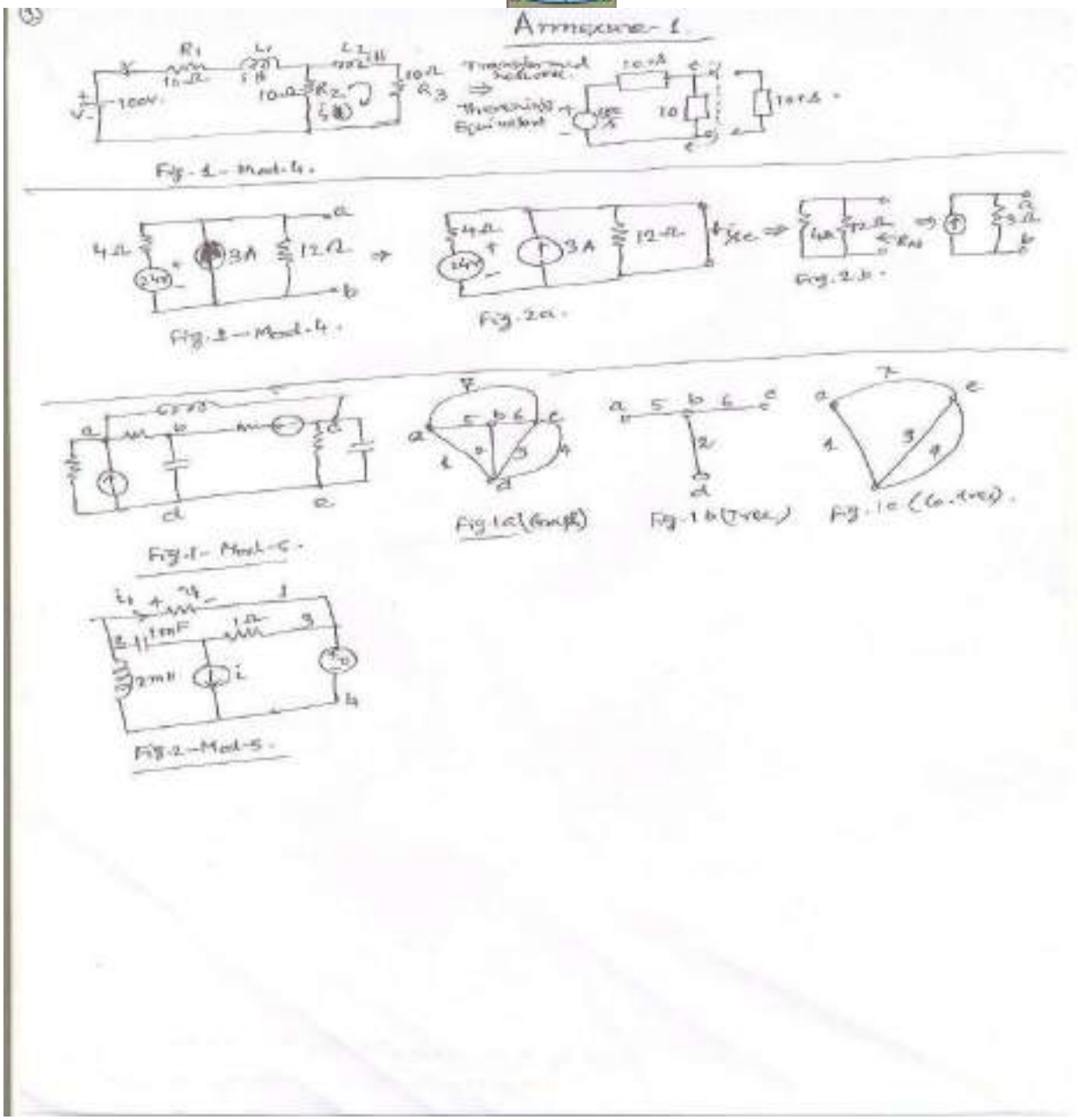

Data Communication
Code: CS504B
Contact: 3L + 1T
Credits: 4

Module I:
Data Communication Fundamentals: Layered Network Architecture; Mode of communication, topology, Data and Signal; Transmission Media: Guided, Unguided; Transmission Impairments and Channel Capacity; Transmission of Digital Data: Interfaces- DTE-DCE, MODEM, Cable MODEM; The telephone network system and DSL technology; **[10L]**
Module II:

Data Link Control: Interfacing to the media and synchronization; Error Control: Error Detection and Correction (Single bit, Multi bit); Flow control: Stop-and-Wait ARQ, Go-Back-N ARQ, Selective-Repeat ARQ

Data Link Protocols: Synchronous, Asynchronous Protocols, Point-to-Point Protocol(PPP). **[12L]**

Module III:

Switching Communication Networks: Circuit switching; Packet switching; Routing in packet switched networks; X.25; Frame Relay; ATM, SONET. **[07L**]

Module IV:

Communication Network: Topology; Medium Access Control Techniques; IEEE CSMA/CD based LANs; IEEE Ring LANs; High Speed LANs – Token Ring Based(FDDI); High Speed LANs – CSMA/CD based; Wireless LANs: Bluetooth; **[07L]**

Network Security: Introduction to Cryptography; User Authentication; Firewalls. **[04L]**

References:

a) Data Communications and Networking, Behrouz A. Forouzan, TMH
b) Data and Computer Communications, William Stallings, PHI
c) Computer Networks, Andrew S. Tanenbaum, PHI

Digital Signal Processing
Code: CS504C
Contact: 3L + 1T
Credits: 4

MODULE – I: 9L

Discrete-time signals:

Concept of discrete-time signal, basic idea of sampling and reconstruction of signal, sampling theorem, sequences – periodic, energy, power, unit-sample, unit-step, unit-ramp, real & complex exponentials, arithmetic operations on sequences. 3L

LTI Systems:

Definition, representation, impulse response, derivation for the output sequence, concept of convolution, graphical, analytical and overlap-add methods to compute convolution supported with examples and exercises, properties of convolution, interconnections of LTI systems with physical interpretations, stability and causality conditions, recursive and non-recursive systems. 6L

MODULE –II: 11L

Z-Transform:

Definition, mapping between s-plane and z-plane, unit circle, convergence and ROC, properties of Z-transform, Z-transform on sequences with examples and exercises, characteristic families of signals along with ROCs, convolution, correlation and multiplication using Z-transform, initial value theorem, Perseval's relation, inverse Z-transform by contour integration, power series & partial-fraction expansions with examples and exercises. 6L

Discrete Fourier Transform:

Concept and relations for DFT/IDFT, Twiddle factors and their properties, computational burden on direct DFT, DFT/IDFT as linear transformations, DFT/IDFT matrices, computation of DFT/IDFT by matrix method, multiplication of DFTs, circular convolution, computation of circular convolution by graphical, DFT/IDFT and matrix methods, linear filtering using DFT, aliasing error, filtering of long data sequences – Overlap-Save and Overlap-Add methods with examples and exercises. 5L

Fast Fourier Transform:

Radix-2 algorithm, decimation-in-time, decimation-in-frequency algorithms, signal flow graphs, Butterflies, computations in one place, bit reversal, examples for DIT & DIF FFT Butterfly computations and exercises. 4L

MODULE – III: 5L

Filter Design:

Basic concepts of IIR and FIR filters, difference equations, design of Butterworth IIR analog filter using impulse invariant and bilinear transforms, design of linear phase FIR filters, no. of taps, rectangular, Hamming and Blackman windows. 5L

MODULE – IV: 7L

Digital Signal Processor:

Elementary idea about the architecture and important instruction sets of TMS320C 5416/6713 processor, writing of small programs in Assembly Language. 4L

FPGA:

Architecture, different sub-systems, design flow for DSP system design, mapping of DSP algorithms onto FPGA. 3L

TEXT BOOKS:

3. Digital Signal Processing – Principles, Algorithms and Applications, J.G.Proakis & D.G.Manolakis, Pearson Ed.
4. Digital Signal processing – A Computer Based Approach, S.K.Mitra, TMH Publishing Co.
5. Digital Signal Processing Signals, Systems and Filters, A. Antoniou, TMH Publishing Co.
6. VLSI Digital Signal Processing Systems Design and Implementation, Wiley International Publication.
7. Digital Signal Processing with Field Programmable Gate Arrays, U.Meyer-Baese, Springer.

REFERENCE BOOKS:

3. Digital Signal Processing, P. Rameshbabu, Scitech Publications (India).
4. Digital Signal Processing, S.Salivahanan, A.Vallabraj & C. Gnanapriya, TMH Publishing Co.

5. Digital Signal Processing; A Hands on Approach, C. Schuler & M.Chugani, TMH Publishing Co.
6. Digital Signal Processing, A. Nagoor Kani, TMH Education
7. Digital Signal Processing S. Poornachandra & B. Sasikala, MH Education
8. Digital Signal Processing; Spectral Computation and Filter Design Chi-Tsong Chen, Oxford University Press
9. Texas Instruments DSP Processor user manuals and application notes.
10. Digital Signal Processing – A practical Approach (second Edition) – Emmanuel C. Ifeacher & Barrie W. Jervis, Pearson Education
11. Xilinx FPGA user manuals and application notes.

Object Oriented Programming
Code: CS504D
Contact: 3L + 1T
Credits: 4

Object oriented design [10 L]
Concepts of object oriented programming language, Major and minor elements, Object, Class, relationships among objects, aggregation, links, relationships among classes-association, aggregation, using, instantiation, meta-class, grouping constructs.
Object oriented concepts [4 L]
Difference between OOP and other conventional programming – advantages and disadvantages. Class, object, message passing, inheritance, encapsulation, polymorphism
Basic concepts of object oriented programming using Java [22 L]
Implementation of Object oriented concepts using Java.

Language features to be covered:
Class & Object proprieties [6L]
Basic concepts of java programming – advantages of java, byte-code & JVM, data types, access specifiers, operators, control statements & loops, array, creation of class, object, constructor, finalize and garbage collection, use of method overloading, this keyword, use of objects as parameter & methods returning objects, call by value & call by reference, static variables & methods, garbage collection, nested & inner classes, basic string handling concepts- String (discuss charAt() , compareTo(), equals(), equalsIgnoreCase(), indexOf(), length() , substring(), toCharArray() , toLowerCase(), toString(), toUpperCase() , trim() , valueOf() methods) & StringBuffer classes (discuss append(), capacity(), charAt(), delete(), deleteCharAt(), ensureCapacity(), getChars(), indexOf(), insert(), length(), setCharAt(), setLength(), substring(), toString() methods), concept of mutable and immutable string, command line arguments, basics of I/O operations – keyboard input using BufferedReader & Scanner classes.

Reusability properties[6L] – Super class & subclasses including multilevel hierarchy, process of constructor calling in inheritance, use of super and final keywords with super() method, dynamic method dispatch, use of abstract classes & methods, interfaces. Creation of packages, importing packages, member access for packages.
Exception handling & Multithreading [6L] – Exception handling basics, different types of exception classes, use of try & catch with throw, throws & finally, creation of user defined exception classes.
Basics of multithreading, main thread, thread life cycle, creation of multiple threads, thread priorities, thread synchronization, inter-thread communication, deadlocks for threads, suspending & resuming threads.

Applet Programming (using swing) [4L] – Basics of applet programming, applet life cycle, difference between application & applet programming, parameter passing in applets, concept of delegation event model and listener, I/O in applets, use of repaint(), getDocumentBase(), getCodeBase() methods, layout manager (basic concept), creation of buttons (JButton class only) & text fields.
Textbooks/References:
1. Rambaugh, James Michael, Blaha – "Object Oriented Modelling and Design" – Prentice Hall, India
2. Ali Bahrami – "Object Oriented System Development" – Mc Graw Hill
3. Patrick Naughton, Herbert Schildt – "The complete reference-Java2" – TMH
4. R.K Das – "Core Java For Beginners" – VIKAS PUBLISHING
5. Deitel and Deitel – "Java How to Program" – 6th Ed. – Pearson
6. Ivor Horton's Beginning Java 2 SDK – Wrox
7. E. Balagurusamy – " Programming With Java: A Primer" – 3rd Ed. – TMH

Practical

Design & Analysis Algorithm Lab
Code: CS591
Contact: 3P
Credits: 2
Programming Language used :C Lab
:1 : Divide and Conquer :

> Implement Binary Search using Divide and Conquer approach

> Implement Merge Sort using Divide and Conquer approach

Lab :2 : Divide and Conquer :

> Implement Quick Sort using Divide and Conquer approach

> Find Maximum and Minimum element from a array of integer using Divide and Conquer approach

Lab :3 : Dynamic Programming :

> Find the minimum number of scalar multiplication needed for chain of matrix

Lab :4 : Dynamic Programming :

>Implement all pair of Shortest path for a graph (Floyed- Warshall Algorithm)

>Implement Traveling Salesman Problem

Lab :5 : Dynamic Programming :

>Implement Single Source shortest Path for a graph (Dijkstra , Bellman Ford Algorithm)

Lab :6 : Brunch and Bound :

>Implement 15 Puzzle Problem

Lab :7 : Backtracking :

>Implement 8 Queen problem

Lab :8 : Backtracking (implement any one of the following problem):

>Graph Coloring Problem

>Hamiltonian Problem

Lab :9 : Greedy method(implement any one of the following problem) :

>Knapsack Problem

>Job sequencing with deadlines

Lab :10 : Greedy method (implement any one of the following problem) :

>Minimum Cost Spanning Tree by Prim's Algorithm

>Minimum Cost Spanning Tree by Kruskal's Algorithm

Lab :11 : Graph Traversal Algorithm :

>Implement Breadth First Search (BFS)

>Implement Depth First Search (DFS)

Microprocessor & Microcontroller Lab
Code: CS592
Contact: 3P
Credits: 2

Sl. No.	Experiment Name	No of Hours
1	Study of Prewritten programs on 8085 trainer kit using the basic instruction set (data transfer, Load/Store, Arithmetic, Logical). **Or,** Familiarization with 8085 simulator on PC. Programs using basic instruction set (data transfer, Load/Store, Arithmetic, Logical) on the simulator.	**3**
2	**Programming using kit or Simulator for:** 5. Table look up 6. Copying a block of memory 7. Shifting a block of memory iv) Packing and unpacking of BCD numbers 8. Addition of BCD numbers 9. Binary to ASCII conversion and vice-versa (Using Subroutine Call) 10. BCD to Binary Conversion and vice-versa vii) String Matching, Multiplication	**18**
3	Program using IN/OUT instructions and 8255 PPI on the trainer kit e.g. subroutine for delay, x. Glowing all the LEDs one by one with particular delay xi. Reading switch state and glowing LEDs accordingly.	**3**
4	Serial communication between two trainer kits	**3**

5	Study of Prewritten programs on 8051 Microcontroller Kit using the basic instruction set (data transfer, Load/Store, Arithmetic, Logical). **Or,** Familiarization with 8051 Simulator on PC. Study of prewritten programs using basic instruction	**3**

	set (data transfer, Load/Store, Arithmetic, Logical).	
	Total 30 hours (10 classes each of 3 periods)	

Programming Practices Using C++
Code: CS593
Contact: 3P(1L+2P)
Credits: 2

Introduction of UNIX/Linux Operating System which includes preliminary commands, start-up & shutdown methodology, file handling as well as introduction to editors like Vi editor, introduction to GNU C & C++ compiler, as well as introduction to GNU & GDB script. **[4P]**

Introduction to C++, basic loop control, executing programs, writing functions, selection statements, review of functions and parameters, command line arguments, recursion, I/O streams, arrays and string manipulation, pointers, structures & unions**. [6P]**

Object-Oriented Programming in C++, fundamentals of classes, constructors-destructors. Dealing with member functions, operator overloading and polymorphism (both static & dynamic). **[6P]**

Dealing with inheritance, derived class handling, abstract class, virtual class, overriding, template class, name-space & exception handling. **[4P]**

Dynamic memory allocation, implementation of Linked Lists, using C++. **[4P]**

Note: GNU C++ can be used for the programming, since it is free and has no licensing anomaly Circuits and Networks Lab
Code: CS594A
Contacts: 3P
Credits: 2

3. Characteristics of Series & Parallel Resonant circuits
4. Verification of Network Theorems
5. Transient Response in R-L & R-C Networks ; simulation / hardware
6. Transient Response in RLC Series & Parallel Circuits & Networks ; simulation / hardware
7. Determination of Impedance (Z), and Admittance (Y) parameters of Two-port networks
8. Generation of periodic, exponential, sinusoidal, damped sinusoidal, step, impulse, and ramp signals using MATLAB
9. Representation of Poles and Zeros in s-plane, determination of partial fraction expansion in s-domain and cascade connection of second-order systems using MATLAB
10. Determination of Laplace Transform, different time domain functions, and Inverse Laplace
11. Transformation using MATLAB

Note: An Institution / college may opt for some other hardware or software simulation wherever possible in place of MATLAB

Data Communication Lab
Code:CS594B
Contact: 3P
Credits: 2

List of Experiments
1. To study different types of transmission media
2. Familiarization with Networking cables (CAT5, UTP), Connectors (RJ45, T-connector), Hubs, Switches. Configuration of a HUB/Switch.
3. PC-to-PC Communication with the Data Communication Trainers for File Transfer.
   Error detection codes, Data Encryption etc.
4. Experiments using LAN Trainer kit for Point-to-Point Communication
   Multicast/Broadcast Communication
   Data Encryption and security protocols
5. To make inter-connections in cables for data communication in LAN and install LAN using (a) Tree topology (b)

STAR topology (c) Bus topology (d) Token-Ring topology
6. Study of MODEMs: (a) configure the modem of a computer (b) Study Serial Interface RS-232 and its applications
(c) Study the Parallel Interface and its applications

DSP Lab Code:
CS594C
Contact: 3P
Credits: 2

Simulation Laboratory using standard Simulator:

c) Sampled sinusoidal signal, various sequences and different arithmetic operations.
d) Convolution of two sequences using graphical methods and using commands- verification of the properties of convolution.
e) Z-transform of various sequences – verification of the properties of Z-transform.
f) Twiddle factors – verification of the properties.
g) DFTs / IDFTs using matrix multiplication and also using commands.
h) Circular convolution of two sequences using graphical methods and using commands, differentiation between linear and circular convolutions.
i) Verifications of the different algorithms associated with filtering of long data sequences and Overlap –add and Overlap- save methods.
j) Butterworth filter design with different set of parameters.
k) FIR filter design using rectangular, Hamming and Blackman windows.

Hardware Laboratory using either 5416 or 6713 Processor and Xilinx FPGA:

3. Writing & execution of small programs related to arithmetic operations and convolution using Assembly Language of TMS320C 5416/6713 Processor, study of MAC instruction.
4. Writing of small programs in VHDL and downloading onto Xilinx FPGA.
5. Mapping of some DSP algorithms onto FPGA.

OOP Lab Code:
CS594D
Contact: 3P
Credits: 2
1. Assignments on class, constructor, overloading, inheritance, overriding
2. Assignments on wrapper class, arrays
3. Assignments on developing interfaces- multiple inheritance, extending interfaces
4. Assignments on creating and accessing packages
5. Assignments on multithreaded programming
6. Assignments on applet programming

Note: Use Java for programming
Preferably download "**java_ee_sdk-6u4-jdk7-windows.exe**" from
http://www.oracle.com/technetwork/java/javaee/downloads/java-ee-sdk-6u3-jdk-7u1-downloads-523391.html

SEMESTER – VI

Detailed syllabus further defining learning outcome as per discussion in the workshop held on 9.7.2012 will be uploaded shortly.

Theory

Principles of Management
HU-601
Contracts: 2L
Credits- 2

Module-I

1. Basic concepts of management: Definition – Essence, Functions, Roles, Level.
2. Functions of Management: Planning – Concept, Nature, Types, Analysis, Management by objectives; Organisation Structure – Concept, Structure, Principles, Centralization, Decentralization, Span of Management; Organisational Effectiveness.

Module-II

3. Management and Society – Concept, External Environment, CSR, Corporate Governance, Ethical Standards.

4. People Management – Overview, Job design, Recruitment & Selection, Training & Development, Stress Management.
5. Managerial Competencies – Communication, Motivation, Team Effectiveness, Conflict Management, Creativity, Entrepreneurship.

Module-III

6. Leadership: Concept, Nature, Styles.
7. Decision making: Concept, Nature, Process, Tools & techniques.
8. Economic, Financial & Quantitative Analysis – Production, Markets, National Income Accounting, Financial Function & Goals, Financial Statement & Ratio Analysis, Quantitative Methods – Statistical Interference, Forecasting, Regression Analysis, Statistical Quality Control.

Module-IV

9. Customer Management – Market Planning & Research, Marketing Mix, Advertising & Brand Management.
10. Operations & Technology Management – Production & Operations Management, Logistics & Supply Chain Management, TQM, Kaizen & Six Sigma, MIS.

Readings:

1. Management: Principles, Processes & Practices – Bhat, A & Kumar, A (OUP).
2. Essentials for Management – Koontz, Revised edition, Tata McGraw Hill (TMH)
3. Management – Stoner, James A. F. (Pearson)
4.Management - Ghuman, Tata McGraw Hill(TMH)

Database Management System CS-601
Contact: 3L
Credits: 3

Introduction [4L]
Concept & Overview of DBMS, Data Models, Database Languages, Database Administrator, Database Users, Three Schema architecture of DBMS.

Entity-Relationship Model [6L]
Basic concepts, Design Issues, Mapping Constraints, Keys, Entity-Relationship Diagram, Weak Entity Sets, Extended E-R features.

Relational Model [5L]
Structure of relational Databases, Relational Algebra, Relational Calculus, Extended Relational Algebra Operations, Views, Modifications Of the Database.

SQL and Integrity Constraints [8L]
Concept of DDL, DML, DCL. Basic Structure, Set operations, Aggregate Functions, Null Values, Domain Constraints, Referential Integrity Constraints, assertions, views, Nested Subqueries, Database security application development using SQL, Stored procedures and triggers.

Relational Database Design [9L]
Functional Dependency, Different anamolies in designing a Database., Normalization using funtional dependencies, Decomposition, Boyce-Codd Normal Form, 3NF, Nomalization using multi-valued depedencies, 4NF, 5NF

Internals of RDBMS [7L]
Physical data structures, Query optimization : join algorithm, statistics and cost bas optimization. Transaction processing, Concurrency control and Recovery Management : transaction model properties, state serializability, lock base protocols, two phase locking.

File Organization & Index Structures [6L]
File & Record Concept, Placing file records on Disk, Fixed and Variable sized Records, Types of Single-Level Index (primary, secondary, clustering), Multilevel Indexes, Dynamic Multilevel Indexes using B tree and B+ tree .

Text Books:

1. Henry F. Korth and Silberschatz Abraham, “Database System Concepts”, Mc.Graw Hill.
2. Elmasri Ramez and Novathe Shamkant, “Fundamentals of Database Systems”, Benjamin Cummings Publishing. Company.
3. Ramakrishnan: Database Management System , McGraw-Hill

4. Gray Jim and Reuter Address, "Transaction Processing : Concepts and Techniques", Moragan Kauffman Publishers.
5. Jain: Advanced Database Management System CyberTech
6. Date C. J., "Introduction to Database Management", Vol. I, II, III, Addison Wesley.
7. Ullman JD., "Principles of Database Systems", Galgottia Publication.

Reference:

1. James Martin, "Principles of Database Management Systems", 1985, Prentice Hall of India, New Delhi
2. "Fundamentals of Database Systems", Ramez Elmasri, Shamkant B.Navathe, Addison Wesley Publishing Edition
3. "Database Management Systems", Arun K.Majumdar, Pritimay Bhattacharya, Tata McGraw Hill

Computer Networks CS-602
Contact: 3L
Credits: 3

Module I
Overview of Data Communication and Networking: [4L]
Introduction; Data communications: components, data representation (ASCII,ISO etc.), direction of data flow (simplex, half duplex, full duplex); network criteria, physical structure (type of connection, topology), categories of network (LAN, MAN,WAN); Internet: brief history, Protocols and standards; Reference models: OSI reference model, TCP/IP reference model, their comparative study.
Physical Level: [6L]
Overview of data(analog & digital), signal(analog & digital), transmission (analog & digital) & transmission media (guided & unguided); Circuit switching: time division & space division switch, TDM bus; Telephone Network;
Module II
Data link Layer: [5L]
Types of errors, framing(character and bit stuffing), error detection & correction methods; Flow control; Protocols: Stop & wait ARQ, Go-Back- N ARQ, Selective repeat ARQ, HDLC;
Medium Access sub layer: [5L]
Point to Point Protocol, LCP, NCP, Token Ring; Reservation, Polling, Multiple access protocols: Pure ALOHA, Slotted ALOHA, CSMA, CSMA/CD, CSMA/CA Traditional Ethernet, fast Ethernet(in brief);
Module III Network layer: [8L]
Internetworking & devices: Repeaters, Hubs, Bridges, Switches, Router, Gateway; Addressing : IP addressing, subnetting; Routing : techniques, static vs. dynamic routing , Unicast Routing Protocols: RIP, OSPF, BGP; Other Procols: ARP, IP, ICMP, IPV6;.
Transport layer: [4L]
Process to Process delivery; UDP; TCP; Congestion Control: Open Loop, Closed Loop choke packets; Quality of service: techniques to improve QoS: Leaky bucket algorithm, Token bucket algorithm,
Module IV Application Layer [5L]
Introduction to DNS, SMTP, SNMP, FTP, HTTP & WWW; Security: Cryptography (Public, Private Key based), Digital Signature, Firewalls.
Modern topics: [5L]
ISDN services & ATM, DSL technology, Cable Modem: Architecture & Operation in brief
Wireless LAN: IEEE 802.11, Introduction to blue-tooth.

Text Books:

1. B. A. Forouzan – "Data Communications and Networking (3rd Ed.) " – TMH
2. A. S. Tanenbaum – "Computer Networks (4th Ed.)" – Pearson Education/PHI
3. W. Stallings – "Data and Computer Communications (5th Ed.)" – PHI/ Pearson Education
4. Zheng & Akhtar, Network for Computer Scientists & Engineers, OUP
5. Black, Data & Computer Communication, PHI
6. Miller, data Communication & Network, Vikas
7. Miller, Digital & Data Communication, Jaico
8. Shay, Understanding Data Communication & Network, Vikas

Reference Books:

1. Kurose and Rose – " Computer Networking -A top down approach featuring the internet" – Pearson Education
2. Leon, Garica, Widjaja – "Communication Networks" – TMH
3. Walrand – "Communication Networks" – TMH.
4. Comer – "Internetworking with TCP/IP, vol. 1, 2, 3(4th Ed.)" – Pearson Education/PHI

Operating System CS-603
Contact: 3L
Credits: 3

Introduction [4L]
Introduction to OS. Operating system functions, evaluation of O.S., Different types of O.S.: batch, multi-programmed, time-sharing, real-time, distributed, parallel.

System Structure[3L]

Computer system operation, I/O structure, storage structure, storage hierarchy, different types of protections, operating system structure (simple, layered, virtual machine), O/S services, system calls.

Process Management [17L]

Processes [3L]: Concept of processes, process scheduling, operations on processes, co-operating processes, inter-process communication.

Threads [2L]: overview, benefits of threads, user and kernel threads.

CPU scheduling [3L]: scheduling criteria, preemptive & non-preemptive scheduling, scheduling algorithms (FCFS, SJF, RR, priority), algorithm evaluation, multi-processor scheduling.

Process Synchronization [5L]: background, critical section problem, critical region, synchronization hardware, classical problems of synchronization, semaphores.
Deadlocks [4L]: system model, deadlock characterization, methods for handling deadlocks, deadlock prevention, deadlock avoidance, deadlock detection, recovery from deadlock.

Storage Management [19L]

Memory Management [5L]: background, logical vs. physical address space, swapping, contiguous memory allocation, paging, segmentation, segmentation with paging.

Virtual Memory [3L]: background, demand paging, performance, page replacement, page replacement algorithms (FCFS, LRU), allocation of frames, thrashing.

File Systems [4L]: file concept, access methods, directory structure, file system structure, allocation methods (contiguous, linked, indexed), free-space management (bit vector, linked list, grouping), directory implementation (linear list, hash table), efficiency & performance.

I/O Management [4L]: I/O hardware, polling, interrupts, DMA, application I/O interface (block and character devices, network devices, clocks and timers, blocking and nonblocking I/O), kernel I/O subsystem (scheduling, buffering, caching, spooling and device reservation, error handling), performance.

Disk Management [3L]: disk structure, disk scheduling (FCFS, SSTF, SCAN,C-SCAN) , disk reliability, disk formatting, boot block, bad blocks.

Protection & Security [4L]

Goals of protection, domain of protection, security problem, authentication, one time password, program threats, system threats, threat monitoring, encryption.

Text Books / References **:**

1. Milenkovie M., “Operating System : Concept & Design”, McGraw Hill.
2. Tanenbaum A.S., “Operating System Design & Implementation”, Practice Hall NJ.
3. Silbersehatz A. and Peterson J. L., “Operating System Concepts”, Wiley.
4. Dhamdhere: Operating System TMH
5. Stalling, William, “Operating Systems”, Maxwell McMillan International Editions, 1992.
6. Dietel H. N., “An Introduction to Operating Systems”, Addison Wesley.

Professional Elective

Information Theory & Coding CS-604A
Contact: 3L
Credits: 3

Source Coding [7L]

Uncertainty and information, average mutual information and entropy, information measures for continuous random variables, source coding theorem, Huffman codes.

Channel Capacity And Coding [7L]

Channel models, channel capacity, channel coding, information capacity theorem, The Shannon limit.

Linear And Block Codes For Error Correction [8L]

Matrix description of linear block codes, equivalent codes, parity check matrix, decoding of a linear block code, perfect codes, Hamming codes.

Cyclic Codes [7L]
Polynomials, division algorithm for polynomials, a method for generating cyclic codes, matrix description of cyclic codes, Golay codes.

BCH Codes [8L]
Primitive elements, minimal polynomials, generator polynomials in terms of minimal polynomials, examples of BCH codes.

Convolutional Codes [8L]
Tree codes, trellis codes, polynomial description of convolutional codes, distance notions for convolutional codes, the generating function, matrix representation of convolutional codes, decoding of convolutional codes, distance and performance bounds for convolutional codes, examples of convolutional codes, Turbo codes, Turbo decoding.

Books

9. Information theory, coding and cryptography - Ranjan Bose; TMH.
10. Information and Coding - N Abramson; McGraw Hill.
11. Introduction to Information Theory - M Mansurpur; McGraw Hill.
12. Information Theory - R B Ash; Prentice Hall.
13. Error Control Coding - Shu Lin and D J Costello Jr; Prentice Hall.

Computer Graphics CS-604B
Contact: 3L
Credits: 3

Module I:

Introduction to computer graphics & graphics systems [6L]: Overview of computer graphics, representing pictures, preparing, presenting & interacting with pictures for presentations; Visualization & image processing; RGB color model, direct coding, lookup table; storage tube graphics display, Raster scan display, 3D viewing devices, Plotters, printers, digitizers, Light pens etc.; Active & Passive graphics devices; Computer graphics software.

Scan conversion [8L]: Points & lines, Line drawing algorithms; DDA algorithm, Bresenham's line algorithm, Circle generation algorithm; Ellipse generating algorithm; scan line polygon, fill algorithm, boundary fill algorithm, flood fill algorithm.

Module II:

2D transformation & viewing [15L]: Basic transformations: translation, rotation, scaling; Matrix representations & homogeneous coordinates, transformations between coordinate systems; reflection shear; Transformation of points, lines, parallel lines, intersecting lines. Viewing pipeline, Window to view port co-ordinate transformation, clipping operations, point clipping, line clipping, clipping circles, polygons & ellipse. Cohen and Sutherland line clipping, Sutherland-Hodgeman Polygon clipping, Cyrus-beck clipping method

3D transformation & viewing [5L]: 3D transformations: translation, rotation, scaling & other transformations. Rotation about an arbitrary axis in space, reflection through an arbitrary plane; general parallel projection transformation; clipping, view port clipping, 3D viewing.

Module III:

Curves [3L]: Curve representation, surfaces, designs, Bezier curves, B-spline curves, end conditions for periodic B-spline curves, rational B-spline curves.

Hidden surfaces [3L]: Depth comparison, Z-buffer algorithm, Back face detection, BSP tree method, the Painter's algorithm, scan-line algorithm; Hidden line elimination, wire frame methods , fractal - geometry.

Color & shading models [2L]: Light & color model; interpolative shading model; Texture.

Introduction to Ray-tracing: [3L]

Human vision and color, Lighting, Reflection and transmission models.

Books:
1. Hearn, Baker – "Computer Graphics (C version 2nd Ed.)" – Pearson education
2. Z. Xiang, R. Plastock – " Schaum's outlines Computer Graphics (2nd Ed.)" – TMH
3. D. F. Rogers, J. A. Adams – "Mathematical Elements for Computer Graphics (2nd Ed.)" – TMH

ERP
CS-604C
Contact: 3L
Credits: 3

Module 1: Overview of ERP (Lectures : 9)

a) **The evolution of ERP systems: A historical perspective**

Evolution through Payroll system, Inventory Control system, Materials Requirement Planning (MRP I) system, Manufacturing Resource Planning (MRP II) system, Their advantages and disadvantages. Definition and Concept of ERP,
Business reasons for rise and popularity of ERP system - Benefits of an ERP system

b) **Business processes supported by ERP systems**

Various business functions in an Organization – Purchasing, Materials Management, Manufacturing, Sales & Distribution, Plant Maintenance, Quality Management, Finance & Accounting including Costing, Human Resources etc.

ERP market place – SAP, Oracle, PeopleSoft, JD Edwards, Baan, Microsoft's suit of products etc.
Business modules in these ERP packages – a brief comparative description of business function modules and sub-modules.

Overview of key end-to-end business processes supported in two major ERP systems (preferably SAP and Oracle) – Order to Cash, Procure to Pay, Plan to Produce and Despatch.

Module 2 : Information Technology and ERP systems (Lectures : 9)

1. **The evolution of Information Technology (IT): A historical perspective**

Evolution of computer generations (hardware and software) – Operating systems, File systems to Database Management systems, Communication Networks. Enabling of ERP systems by IT evolution.

2. **The evolution of ERP systems architecture**

Client-Server based architecture, Multi-Tier architecture – Presentation layer, Application layer, and Database layer (On- line Transaction Processing – OLTP). Brief discussion on Extended ERP systems - Web-enabled ERP architecture, Service-Oriented Architecture and Cloud Computing. Open Source ERP.

3. **Related technology concepts**

ERP and Supply Chain Management (SCM), and Customer Relationship Management (CRM), ERP and Business Intelligence (some of the popular tools like Cognos, Business Objects should be mentioned), ERP and Data warehousing (Data Mart, Data Mining and On-line Analytical Processing - OLAP), ERP and E-business.

Module 3 : Implementation of ERP system (Lectures : 11)

Types of services required in implementation – Consulting, Configuration, Customization and Support

1) **ERP implementation approach**

Single vendor versus Best-of Breed ERP implementation, Big Bang versus Phased (by module/ site) implementation, Using ERP of Application Service Provider (ASP).

2) **ERP implementation life cycle**

Planning different aspects (Economic viability, Senior Management commitment, Resource requirements, Change management etc.), Understanding requirements and Process preparation – Gap analysis and Business Process Engineering, User Acceptance criteria, Design, Configuration, Customization (difference between Configuration and Customization, advantages and disadvantages), Extensions, Data migration, End-user training, User Acceptance, Going live, Roll-out.
Differences between ERP implementation life cycle and Custom Software development phases. Drawbacks of ERP system.

3) **Organizing implementation**

Interaction with Vendors, Consultants, and Users. Contracts with Vendors, Consultants, and Employees. Project Management and Monitoring. ERP Project Organization
– Formation of Steering Committee and different User Groups. Top Management Commitment and Steering Committee meetings. Change Management, Risks and Challenges in ERP implementation.

4) **Post-implementation Support, Review, Maintenance and Security of ERP systems**

A typical Support Cycle (Planning, Stabilization, Ongoing and Upgrade phases). Post-implementation Review of ERP systems – measures of review (Efficiency, Effectiveness, and Competitive Advantage), and approaches for review (User attitude survey, Cost/benefit analysis, Compliance audit, Budget performance review, Service level monitoring, Technical review, Product review, Integration review etc.). System maintenance and ERP system maintenance. Software upgrade (patch, release, version). Security and Access control of ERP systems.

Module 4 : Emerging Trends and Future of ERP systems (Lectures : 7)

1. **Emerging Technologies and ERP**

Service-oriented Architecture (SOA): Enterprise SOA layers – Business processes, Business services, Components and Integration services, Advantages and Drawbacks of SOA, When to use SOA, Difference between multi-layered Client-server architecture and SOA, basic awareness of NetWeaver from SAP, Websphere from Oracle and .Net from Microsoft.
Enterprise Application Integration (EAI): Basic understanding of the concept, Types of EAI (levels) – User Interface, Method (logic), Application Interface, Data.
EAI architecture – Typical framework (Business Processes, Components &Services, Messaging service, and Transport service. Mention of some of the leading EAI vendors – IBM, Microsoft, Oracle, SAP, TIBCO.
Radio Frequency Identification (RFID) and ERP: awareness of RFID technology, Benefits of RFID integrated with ERPs.
M-Commerce: basic concept and applications, difference with E-Commerce, benefits of integration with ERPs.

2. **Future of ERP**

Technology transformation to SOA, more E-Commerce features, Growing mobile applications, Economical and Easy models of ERP deployment etc.

Books Recommended:

i) Enterprise Resource Planning – A Managerial Perspective by D P Goyal, Tata McGraw Hill Education, 2011

ii) Enterprise Resource Planning by Ashim Raj Singla, Cengage Learning, 2008

References:

1. Enterprise Resource Planning, 2nd Edition by Alexis Leon, Tata McGraw Hill Education, 2008

Operation Research CS-605A
Contact: 3L Credits: 3

Free Elective

Module I

Linear Programming Problems (LPP):

Basic LPP and Applications; Various Components of LP Problem Formulation.

Solution of Linear Programming Problems:
Solution of LPP: Using Simultaneous Equations and Graphical Method;
Definitions: Feasible Solution, Basic and non-basic Variables, Basic Feasible Solution, Degenerate and Non-degenerate Solution, Convex set and explanation with examples. **5L**
Solution of LPP by Simplex Method; Charnes' Big-M Method; Duality Theory. Transportation Problems and Assignment Problems. **12L**

Module II

Network Analysis:
Shortest Path: Floyd Algorithm; Maximal Flow Problem (Ford-Fulkerson); PERT-CPM (Cost Analysis, Crashing, Resource Allocation excluded). **6L**

Inventory Control:
Introduction to EOQ Models of Deterministic and Probabilistic ; Safety Stock; Buffer Stock. **3L**

Module III

Game Theory:
Introduction; 2-Person Zero-sum Game; Saddle Point; Mini-Max and Maxi-Min Theorems (statement only) and problems; Games without Saddle Point; Graphical Method; Principle of Dominance. **5L**

Module IV

Queuing Theory:
Introduction; Basic Definitions and Notations; Axiomatic Derivation of the Arrival & Departure (Poisson Queue). Poisson Queue Models: (M/M/1): (∞ / FIFO) and (M/M/1: N / FIFO) and problems.

Text Books:

1. H. A. Taha, "Operations Research", Pearson
2. P. M. Karak – "Linear Programming and Theory of Games", ABS Publishing House
3. Ghosh and Chakraborty, "Linear Programming and Theory of Games", Central Book Agency
4. Ravindran, Philips and Solberg - "Operations Research", WILEY INDIA

References:

1. Kanti Swaroop — "Operations Research", Sultan Chand & Sons
2. Rathindra P. Sen—"Operations Research: Algorithms and Applications", PHI
3. R. Panneerselvam - "Operations Research", PHI
4. A.M. Natarajan, P. Balasubramani and A. Tamilarasi - "Operations Research", Pearson
5. M. V. Durga Prasad – "Operations Research", CENGAGE Learning
6. J. K. Sharma - "Operations Research", Macmillan Publishing Company

Human Resource Management (HSS) CS-605B
Contact: 3L

Credits: 3

Introduction : HR Role and Functions, Concept and Significance of HR, Changing role of HR managers - HR functions and Global Environment, role of a HR Manager.

Human Resources Planning : HR Planning and Recruitment: Planning Process - planning at different levels - Job Analysis - Recruitment and selection processes - Restructuring strategies - Recruitment-Sources of Recruitment-Selection Process-Placement and Induction-Retention of Employees.

Training and Development : need for skill upgradation - Assessment of training needs - Retraining and Redeployment methods and techniques of training employees and executives - performance appraisal systems.
Performance Management System : Definition, Concepts and Ethics-Different methods of Performance Appraisal- Rating Errors-Competency management.

Industrial Relations : Factors influencing industrial relations - State Interventions and Legal Framework - Role of Trade unions - Collective Bargaining - Workers' participation in management.
Case study.

Books :
1. Gary Dessler, Human Resource Management - (8th ed.,) Pearson Education, Delhi
2.Decenzo & Robbins, Personnel / Human Resource Management, 3rd ed., John Wiley & Sons (Pvt.) Ltd.
3. Biswajeet Patanayak, Human Resource Management, PHI, New Delhi
4. Luis R. Gomez, Mejia, Balkin and Cardy, Managing Human Resources PHI, New Delhi.

Multimedia Technology CS-605C
Contact: 3L
Credits: 3

Introduction [2L]
Multimedia today, Impact of Multimedia, Multimedia Systems, Components and Its Applications

Text and Audio [6L]
Text: Types of Text, Ways to Present Text, Aspects of Text Design, Character, Character Set, Codes, Unicode, Encryption;
Audio: Basic Sound Concepts, Types of Sound, Digitizing Sound, Computer Representation of Sound (Sampling Rate, Sampling Size, Quantization), Audio Formats, Audio tools, MIDI

Image and Video (8L)
Image: Formats, Image Color Scheme, Image Enhancement; Video: Analogue and Digital Video, Recording Formats and Standards (JPEG, MPEG, H.261) Transmission of Video Signals, Video Capture, and Computer based Animation.

Synchronization [4L]
Temporal relationships, synchronization accuracy specification factors, quality of service

Storage models and Access Techniques [(4L]
Magnetic media, optical media, file systems (traditional, multimedia) Multimedia devices – Output devices, CD-ROM, DVD, Scanner, CCD

Image and Video Database [8L]
Image representation, segmentation, similarity based retrieval, image retrieval by color, shape and texture; indexing- k- d trees, R-trees, quad trees; Case studies- QBIC, Virage. Video Content, querying, video segmentation, indexing

Document Architecture and Content Management [9L]

Content Design and Development, General Design Principles

Hypertext: Concept, Open Document Architecture (ODA), Multimedia and Hypermedia Coding Expert Group (MHEG), Standard Generalized Markup Language (SGML), Document Type Definition (DTD), Hypertext Markup Language (HTML) in Web Publishing. Case study of Applications

Multimedia Applications [4L]
Interactive television, Video-on-demand, Video Conferencing, Educational Applications, Industrial Applications, Multimedia archives and digital libraries, media editors.

Books:
1. Ralf Steinmetz and Klara Nahrstedt , Multimedia: Computing, Communications & Applications , Pearson Ed.
2. Nalin K. Sharda , Multimedia Information System , PHI.
3. Fred Halsall , Multimedia Communications , Pearson Ed.
4. Koegel Buford , Multimedia Systems , Pearson Ed.
5. Fred Hoffstetter , Multimedia Literacy , McGraw Hill.
6. Ralf Steinmetz and Klara Nahrstedt , Multimedia Fundamentals: Vol. 1- Media Coding and Content Processing , PHI.
7. J. Jeffcoate , Multimedia in Practice: Technology and Application , PHI.
8. Prabhat K. Andleigh & Kiran Thakrar , Multimedia Systems Design , PHI.

Practical

Database Management System Lab
Code: CS691
Contact: 3P
Credits: 2

Structured Query Language

1. Creating Database
- Creating a Database
- Creating a Table
- Specifying Relational Data Types
- Specifying Constraints
- Creating Indexes

2. Table and Record Handling
1. INSERT statement
2. Using SELECT and INSERT together
3. DELETE, UPDATE, TRUNCATE statements
4. DROP, ALTER statements

3. Retrieving Data from a Database
- The SELECT statement
- Using the WHERE clause
- Using Logical Operators in the WHERE clause
- Using IN, BETWEEN, LIKE , ORDER BY, GROUP BY and HAVING

Clause
- Using Aggregate Functions
- Combining Tables Using JOINS
- Subqueries

4. Database Management
- Creating Views
- Creating Column Aliases
- Creating Database Users
- Using GRANT and REVOKE

Cursors in Oracle PL / SQL

Writing Oracle PL / SQL Stored Procedures

Network Lab
Code: CS692

Contact: 3P
Credits: 2

Syllabus for B.Tech(Computer Science & Engineering) Up to Fourth

Revised Syllabus of B.Tech CSE (for the students who were admitted in Academic Session 2010-

- IPC (Message queue)
- NIC Installation & Configuration (Windows/Linux)
- Familiarization with
  - Networking cables (CAT5, UTP)
  - Connectors (RJ45, T-connector)
  - Hubs, Switches
- TCP/UDP Socket Programming
- Multicast & Broadcast Sockets
- Implementation of a Prototype Multithreaded Server
- Implementation of
  - Data Link Layer Flow Control Mechanism (Stop & Wait, Sliding Window)
  - Data Link Layer Error Detection Mechanism (Cyclic Redundancy Check)
  - Data Link Layer Error Control Mechanism (Selective Repeat, Go Back N)

Operating System Lab
Code: CS693
Contact: 3P
Credits: 2

1. **Shell programming [6P]**: creating a script, making a script executable, shell syntax (variables, conditions, control structures, functions, commands).
2. **Process [6P]**: starting new process, replacing a process image, duplicating a process image, waiting for a process, zombie process.
3. **Signal [9P]**: signal handling, sending signals, signal interface, signal sets.
4. **Semaphore [6P]**: programming with semaphores (use functions semctl, semget, semop, set_semvalue, del_semvalue, semaphore_p, semaphore_v).
5. **POSIX Threads [9P]**: programming with pthread functions(viz. pthread_create, pthread_join, pthread_exit, pthread_attr_init, pthread_cancel)
6. **Inter-process communication [9P]**: pipes(use functions pipe, popen, pclose), named pipes(FIFOs, accessing FIFO)

Proposed Syllabus
VII Semester
Theory

Software Engineering
CS701
Contracts: 3L
Credits- 3

Module I
Software Engineering –Objectives, Definitions ,Software Process models - Waterfall Model , Prototype model, RAD, Evolutionary Models ,Incremental, Spiral (**4L)**
Software Project Planning- Feasibility Analysis, Technical Feasibility, Cost- Benefit Analysis, COCOMO model. **[4L]**
Module II
Structured Analysis , Context diagram and DFD, Physical and Logical DFDs ,Data Modelling, ER diagrams, Software Requirements Specification **(5L) Module**
III
Design Aspects :Top-Down And Bottom-Up design; Decision tree, decision table and structured English, Structure chart, Transform analysis Functional vs. Object- Oriented approach. **[3L]**
Unified Modelling Language
Class diagram, interaction diagram: collaboration diagram, sequence diagram, state chart diagram, activity diagram, implementation diagram. **(4L)**
Module V
Coding & Documentation – Structured Programming, Modular Programming, Module Relationship- Coupling, Cohesion, OO Programming, Information Hiding, Reuse, System Documentation. **[5L]**
Testing – Levels of Testing, Integration Testing, System Testing.**(5L)**
Software Quality, Quality Assurance, Software Maintenance, Software Configuration Management, Software Architecture. **[6L]**

Reference Books:
1. Software Engineering : A practitioner's approach– Pressman(TMH)
2. Software Engineering- Pankaj Jalote (Wiley-India)
3. Software Engineering- Rajib Mall (PHI)
4. Software Engineering –Agarwal and Agarwal (PHI)

Compiler Design
CS702
Contracts: 3L
Credits- 3

Module I
Introduction to Compiling [2L]
Compilers, Analysis-synthesis model , The phases of the compiler, Cousins of the compiler.
Lexical Analysis [5L]
The role of the lexical analyzer, Tokens, Patterns, Lexemes, Input buffering, Specifications of a token, Recognition of tokens, Finite automata, From a regular expression to an NFA, From a regular expression to NFA, From a regular expression to DFA, Design of a lexical analyzer generator (Lex).
Module II
Syntax Analysis [8L]
The role of a parser, Context free grammars, Writing a grammar, Top down Parsing, Non-recursive Predictive parsing (LL), Bottom up parsing, Handles, Viable prefixes, Operator precedence parsing, LR parsers (SLR, LALR), Parser generators (YACC). Error Recovery strategies for different parsing techniques.
Syntax directed translation [4L]
Syntax directed definitions, Construction of syntax trees, Bottom-up evaluation of S attributed definitions, L attributed definitions, Bottom-up evaluation of inherited attributes.
Module III
Type checking [3L]
Type systems, Specification of a simple type checker, Equivalence of type expressions, Type conversions
Run time environments [4L]
Source language issues (Activation trees, Control stack, scope of declaration, Binding of names), Storage organization (Subdivision of run-time memory, Activation records), Storage allocation strategies, Parameter passing (call by value, call by reference, copy restore, call by name), Symbol tables, dynamic storage allocation techniques.
Module IV

Intermediate code generation [3L]
Intermediate languages, Graphical representation, Three-address code, Implementation of three address statements (Quadruples, Triples, Indirect triples).
Code optimization [4L]
Introduction, Basic blocks & flow graphs, Transformation of basic blocks, Dag representation of basic blocks, The principle sources of optimization, Loops in flow graph, Peephole optimization.
Code generations [3L]
Issues in the design of code generator, a simple code generator, Register allocation & assignment.
Text books:
1. Aho, Sethi, Ullman - "Compiler Principles, Techniques and Tools" - Pearson Education.
2. Holub - "Compiler Design in C" – PHI
3.Tremblay and Sorenson Compiler Writing-McgrawHill International .
4. Chattopadhyay , S- Compiler Design (PHI)

Pattern Recognition
CS703A
Contracts: 3L
Credits- 3

Module – I	
Introduction – Definitions, data sets for Pattern Recognition	2
Different Paradigms of Pattern Recognition	1
Representations of Patterns and Classes	2
Metric and non-metric proximity measures	2
Module - II	
Feature extraction	
Different approaches to Feature Selection	2
Nearest Neighbour Classifier and variants	1
Efficient algorithms for nearest neighbour	2
classification	2
Module - III	
Different Approaches to Prototype Selection	2
Bayes Classifier	3
Decision Trees	3
Linear Discriminant Function	3
Module - IV	
Support Vector Machines	2
Clustering	3
Clustering Large datasets	2
Combination of Classifiers	2
Applications – Document Recognition	2

REFERENCES
1. Devi V.S.; Murty, M.N. (2011) Pattern Recognition: An Introduction, Universities Press, Hyderabad.
2. R. O. Duda, P. E. Hart and D. G. Stork, Pattern Classification, Wiley, 2000.

Soft Computing
CS703B
Contracts: 3L
Credits- 3
Module-I [2L]
Introduction: Introduction to soft computing; introduction to fuzzy sets and fuzzy logic systems; introduction to biological and artificial

neural network; introduction to Genetic Algorithm.

Module-II [10L]
Fuzzy sets and Fuzzy logic systems:
Classical Sets and Fuzzy Sets and Fuzzy relations : Operations on Classical sets, properties of classical sets, Fuzzy set operations, properties of fuzzy sets, cardinality, operations, and properties of fuzzy relations.
Membership functions : Features of membership functions, standard forms and boundaries, different fuzzification methods.
Fuzzy to Crisp conversions: Lambda Cuts for fuzzy sets, fuzzy Relations, Defuzzification methods.
Classical Logic and Fuzzy Logic: Classical predicate logic, Fuzzy Logic, Approximate reasoning and Fuzzy Implication
Fuzzy Rule based Systems: Linguistic Hedges, Fuzzy Rule based system – Aggregation of fuzzy Rules, Fuzzy Inference System-Mamdani Fuzzy Models – Sugeno Fuzzy Models.
Applications of Fuzzy Logic: How Fuzzy Logic is applied in Home Appliances, General Fuzzy Logic controllers, Basic Medical Diagnostic systems and Weather forecasting

Module-III [10L]
Neural Network
Introduction to Neural Networks: Advent of Modern Neuroscience, Classical AI and Neural Networks, Biological Neurons and Artificial neural network; model of artificial neuron.
Learning Methods : Hebbian, competitive, Boltzman etc.,
Neural Network models: Perceptron, Adaline and Madaline networks; single layer network; Back-propagation and multi layer networks.
Competitive learning networks: Kohonen self organizing networks, Hebbian learning; Hopfield Networks.
Neuo-Fuzzy modelling:
Applications of Neural Networks: Pattern Recognition and classification

Module-IV[10L]
Genetic Algorithms: Simple GA, crossover and mutation, Multi-objective Genetic Algorithm (MOGA). **Applications of Genetic Algorithm**: genetic algorithms in search and optimization, GA based clustering Algorithm, Image processing and pattern Recognition

Module-V [4L]
Other Soft Computing techniques: Simulated Annealing, Tabu search, Ant colony optimization (ACO), Particle Swarm Optimization (PSO).

Text Books:
1. Fuzzy logic with engineering applications, Timothy J. Ross, John Wiley and Sons.
2. S. Rajasekaran and G.A.V.Pai, "Neural Networks, Fuzzy Logic and Genetic Algorithms", PHI
3. Principles of Soft Computing , S N Sivanandam, S. Sumathi, John Wiley & Sons
4. Genetic Algorithms in search, Optimization & Machine Learning by David E. Goldberg
5. Neuro-Fuzzy and Soft computing, Jang, Sun, Mizutani, PHI
6. Neural Networks: A Classroom Approach,1/e by Kumar Satish, TMH,
7. Genetic Algorithms in search, Optimization & Machine Learning by David E. Goldberg, Pearson/PHI
8. A beginners approach to Soft Computing, Samir Roy & Udit Chakraborty, Pearson

Reference Books:
1. Fuzzy Sets and Fuzzy Logic: Theory and Applications, George J. Klir and Bo Yuan, Prentice Hall
2. Neural Networks: A Comprehensive Foundation (2nd Edition), Simon Haykin, Prentice Hall.

Artificial Intelligence
CS703C
Contracts: 3L
Credits- 3 39L
Introduction [2]

Overview of Artificial intelligence- Problems of AI, AI technique, Tic - Tac - Toe problem.

Intelligent Agents [2]

Agents & environment, nature of environment, structure of agents, goal based agents, utility based agents, learning agents.

Problem Solving [2]

Problems, Problem Space & search: Defining the problem as state space search, production system, problem characteristics, issues in the design of search programs.

Search techniques [5]

Solving problems by searching :problem solving agents, searching for solutions; uniform search strategies: breadth first search, depth first search, depth limited search, bidirectional search, comparing uniform search strategies.

Heuristic search strategies [4]

Greedy best-first search, A* search, memory bounded heuristic search: local search algorithms & optimization problems: Hill climbing search, simulated annealing search, local beam search, genetic algorithms; constraint satisfaction problems, local search for constraint satisfaction problems.

Adversarial search [3]

Games, optimal decisions & strategies in games, the minimax search procedure, alpha-beta pruning, additional refinements, iterative deepening.

Knowledge & reasoning [3]

Knowledge representation issues, representation & mapping, approaches to knowledge representation, issues in knowledge representation.

Using predicate logic [2]

Representing simple fact in logic, representing instant & ISA relationship, computable functions & predicates, resolution, natural deduction.

Representing knowledge using rules [3]

Procedural verses declarative knowledge, logic programming, forward verses backward reasoning, matching, control knowledge.

Probabilistic reasoning [3]

Representing knowledge in an uncertain domain, the semantics of Bayesian networks, Dempster-Shafer theory, Fuzzy sets & fuzzy logics.

Planning [2]

Overview, components of a planning system, Goal stack planning, Hierarchical planning, other planning techniques.

Natural Language processing [2]

Introduction, Syntactic processing, semantic analysis, discourse & pragmatic processing.

Learning [3]

Forms of learning, inductive learning, learning decision trees, explanation based learning, learning using relevance information, neural net learning & genetic learning.

Expert Systems [2]

Representing and using domain knowledge, expert system shells, knowledge acquisition.

Basic knowledge of programming language like Prolog & Lisp. [3]

Books:

1. Artificial Intelligence, Ritch & Knight, TMH

2. Artificial Intelligence A Modern Approach, Stuart Russel Peter Norvig Pearson

3. Introduction to Artificial Intelligence & Expert Systems, Patterson, PHI

4. Poole, Computational Intelligence, OUP

5. Logic & Prolog Programming, Saroj Kaushik, New Age International

6. Expert Systems, Giarranto, VIKAS

7. Artificial Intelligence, Russel, Pearson

Image Processing
CS703D
Contracts: 3L
Credits- 3 38L
Introduction [3L]
Background, Digital Image Representation, Fundamental steps in Image Processing, Elements of Digital Image Processing - Image Acquisition, Storage, Processing, Communication, Display.

Digital Image Formation [4L]
A Simple Image Model, Geometric Model- Basic Transformation (Translation, Scaling, Rotation), Perspective Projection, Sampling & Quantization - Uniform & Non uniform.

Mathematical Preliminaries [9L]
Neighbour of pixels, Connectivity, Relations, Equivalence & Transitive Closure; Distance Measures, Arithmetic/Logic Operations, Fourier Transformation, Properties of The Two Dimensional Fourier Transform, Discrete Fourier Transform, Discrete Cosine & Sine Transform.

Image Enhancement [8L]
Spatial Domain Method, Frequency Domain Method, Contrast Enhancement -Linear & Nonlinear Stretching, Histogram Processing; Smoothing - Image Averaging, Mean Filter, Low-pass Filtering; Image Sharpening. High-pass Filtering, High-boost Filtering, Derivative Filtering, Homomorphic Filtering; Enhancement in the frequency domain - Low pass filtering, High pass filtering.

Image Restoration [7L]
Degradation Model, Discrete Formulation, Algebraic Approach to Restoration - Unconstrained & Constrained; Constrained Least Square Restoration, Restoration by Homomorphic Filtering, Geometric Transformation - Spatial Transformation, Gray Level Interpolation.

Image Segmentation [7L]
Point Detection, Line Detection, Edge detection, Combined detection, Edge Linking & Boundary Detection - Local Processing, Global Processing via The Hough Transform; Thresholding - Foundation, Simple Global Thresholding, Optimal Thresholding; Region Oriented Segmentation - Basic Formulation, Region Growing by Pixel Aggregation, Region Splitting & Merging.

Books:
1. Digital Image Processing, Gonzalves,Pearson
2. Digital Image Processing, Jahne, Springer India
3.Digital Image Processing & Analysis,Chanda & Majumder,PHI
4.Fundamentals of Digital Image Processing, Jain, PHI
5.Image Processing, Analysis & Machine Vision, Sonka, VIKAS
6. Getting Started with GIS- Clarke Keith. C; PE.
7. Concepts & Techniques of GIS - Lo C.P, Albert, Yeung K.W- PHI.

Distributed Operating System
CS704A
Contracts: 3L
Credits- 3 [36L]

Introduction to Distributed System [2]
Introduction, Examples of distributed system, Resource sharing, Challenges

Operating System Structures: [3]
Review of structures: monolithic kernel, layered systems, virtual machines. Process based models and client server architecture; The

micro-kernel based client-server approach.

Communication [4]
Inter-process communication , Remote Procedure Call, Remote Object Invocation, Tasks and Threads. Examples from LINUX, Solaris 2 and Windows NT.

Theoretical Foundations: [2]
Introduction. Inherent Limitations of distributed Systems. Lamport's Logical clock. Global State

Distributed Mutual Exclusion:[4]
Classification of distributed mutual exclusion algorithm. NonToken based Algorithm:Lamport's algorithm, Ricart-Agrawala algorithm. Token based Algorithm: Suzuki-Kasami's broadcast algorithm.

Distributed Deadlock Detection: [4]
Deadlock handling strategies in distributed systems. Control organizations for distributed deadlock detection. Centralized and Distributed deadlock detection algorithms: Completely Centralized algorithms, path pushing, edge chasing, global state detection algorithm.

Protection and Security: [4]
Requirements for protection and security regimes. The access matrix model of protection. System and user modes, rings of protection, access lists, capabilities. User authentication, passwords and signatures. Use of single key and public key encryption.

Distributed file systems: [6]
Issues in the design of distributed file systems: naming, transparency, update semantics and fault resilience. Use of the Virtual File System layer. Examples of distributed systems including Sun NFS, the Andrew filestore, CODA file system and OSF DCE.

Distributed Shared Memory: [4]
Architecture and motivations. Algorithms for implementing DSM. Memory Coherence

CORBA: [3]
The Common Object Request Broker Architecture model and software and its relationship to Operating Systems.

Books:
1 Andrew S. Tanenbaum and Maarten Van Steen, Distributed Systems Principles and Paradigms, PHI
2. Singhal Mukesh & Shivaratri N. G., Advanced Concepts in Operating Systems, TMH
3. Tanenbaum, A. S. Distributed Operating Systems, (ISBN 0-131-439-340), Prentice Hall 199
4. Tanenbaum, A. S. Modern Operating Systems, 2nd Edition (ISBN 0-13-031358-0), Prentice Hall 2001.
5. Bacon, J., Concurrent Systems, 2nd Edition, (ISBN 0-201-177-676), Addison Wesley 1998.
6.Silberschatz, A., Galvin, P. and Gagne, G., Applied Operating Systems Concepts, 1st Edition, (ISBN 0-471-36508-4), Wiley 2000.
7.Coulouris, G. et al, Distributed Systems: Concepts and Design, 3rd Edition, (ISBN 0-201-61918-0), Addison Wesley 2001.
8.Galli, D.L., Distributed Operating Systems: Concepts and Practice (ISBN 0-13-079843-6), Prentice-Hall 2000.

Cloud Computing
CS704B
Contracts: 3L
Credits- 3

Module 1: Definition of Cloud Computing and its Basics (Lectures : 9)

1. **Definition of Cloud Computing:**

   Defining a Cloud, Cloud Types – NIST model, Cloud Cube model, Deployment models (Public , Private, Hybrid and Community Clouds), Service models – Infrastructure as a Service, Platform as a Service, Software as a Service with

examples of services/ service providers, Cloud Reference model

Characteristics of Cloud Computing – a shift in paradigm

Benefits and advantages of Cloud Computing

2. **Cloud Architecture:**

   A brief introduction on Composability, Infrastructure, Platforms, Virtual Appliances, Communication Protocols, Applications, Connecting to the Cloud by Clients

3. **Services and Applications by Type**

   IaaS – Basic concept, Workload, partitioning of virtual private server instances, Pods, aggregations, silos

   PaaS – Basic concept, tools and development environment with examples

   SaaS - Basic concept and characteristics, Open SaaS and SOA, examples of SaaS platform

   Identity as a Service (IDaaS)

   Compliance as a Service (CaaS)

Module 2 : Use of Platforms in Cloud Computing (Lectures : 12)

1. **Concepts of Abstraction and Virtualization**

   Virtualization technologies : Types of virtualization (access, application, CPU, storage), Mobility patterns (P2V, V2V, V2P, P2P, D2C, C2C, C2D, D2D)

   Load Balancing and Virtualization: Basic Concepts, Network resources for load balancing, Advanced load balancing (including Application Delivery Controller and Application Delivery Network), Mention of The Google Cloud as an example of use of load balancing

   Hypervisors: Virtual machine technology and types, VMware vSphere Machine

   Imaging (including mention of Open Virtualization Format – OVF)

   Porting of applications in the Cloud: The simple Cloud API and AppZero Virtual Application appliance

2. **Concepts of Platform as a Service**

   Definition of services, Distinction between SaaS and PaaS (knowledge of Salesforce.com and Force.com), Application development

   Use of PaaS Application frameworks

3. **Use of Google Web Services**

   Discussion of Google Applications Portfolio – Indexed search, Dark Web, Aggregation and disintermediation, Productivity applications and service, Adwords, Google Analytics, Google Translate, a brief discussion on Google Toolkit (including introduction of Google APIs in brief), major features of Google App Engine service.

4. **Use of Amazon Web Services**

   Amazon Web Service components and services: Amazon Elastic Cloud, Amazon Simple Storage system, Amazon Elastic Block Store, Amazon SimpleDB and Relational Database Service

5. **Use of Microsoft Cloud Services**

   Windows Azure platform: Microsoft's approach, architecture, and main elements, overview of Windows Azure AppFabric, Content Delivery Network, SQL Azure, and Windows Live services

Module 3 : Cloud Infrastructure (Lectures : 7)

Types of services required in implementation – Consulting, Configuration, Customization and Support

1. **Cloud Management**

   An overview of the features of network management systems and a brief introduction of related products from large cloud

vendors, Monitoring of an entire cloud computing deployment stack – an overview with mention of some products, Lifecycle management of cloud services (six stages of lifecycle)

2. **Concepts of Cloud Security**

   Cloud security concerns, Security boundary, Security service boundary

   Overview of security mapping

   Security of data: Brokered cloud storage access, Storage location and tenancy, encryption, and auditing and compliance

   Identity management (awareness of Identity protocol standards)

Module 4 : Concepts of Services and Applications (Lectures : 8)

1. **Service Oriented Architecture:** Basic concepts of message-based transactions, Protocol stack for an SOA architecture, Event-driven SOA, Enterprise Service Bus, Service catalogs
2. **Applications in the Cloud:** Concepts of cloud transactions, functionality mapping, Application attributes, Cloud service attributes, System abstraction and Cloud Bursting, Applications and Cloud APIs
3. **Cloud-based Storage:** Cloud storage definition – Manned and Unmanned
4. **Webmail Services:** Cloud mail services including Google Gmail, Mail2Web, Windows Live Hotmail, Yahoo mail, concepts of Syndication services

Books Recommended:

1. Cloud Computing Bible by Barrie Sosinsky, Wiley India Pvt. Ltd, 2013
2. Mastering Cloud Computing by Rajkumar Buyya, Christian Vecchiola, S. Thamarai Selvi, McGraw Hill Education (India) Private Limited, 2013
3. Cloud computing: A practical approach, Anthony T. Velte, Tata Mcgraw-Hill
4. Cloud Computing, Miller, Pearson
5. Building applications in cloud:Concept, Patterns and Projects, Moyer, Pearson
6.

References:

1. Cloud Computing – Second Edition by Dr. Kumar Saurabh, Wiley India

Data Warehousing & Data Mining
CS704C
Contracts: 3L
Credits- 3

Module 1: Overview and Concepts of Data Warehousing (Lectures : 9)

4. **Overview of Data warehousing**

   Strategic information and the need for Data warehousing, Defining a Data warehouse, Evolution of Data warehousing, Data warehousing and Business Intelligence

5. **The Building Blocks of Data warehouse**

   Defining features – Subject-oriented data, Integrated data, Time-variant data, Nonvolatile data, Data granularity

   Data warehouses and Data marts

   Architectural Types – Centralized, Independent data marts, Federated, Hub-and-Spoke, Data mart bus

   Overview of components - Source Data, Data Staging, Data Storage, Information Delivery, Metadata, and Management and Control components

6. **Business Requirements and Data warehouse**

   Dimensional nature of Business data and Dimensional Analysis, Dimension hierarchies and categories, Key Business

Metrics (Facts), Requirement Gathering methods and Requirements Definition Document (contents)
Business Requirements and Data Design – Structure for Business Dimensions and Key Measurements, Levels of detail

Business Requirements and the Architecture plan Business
Requirements and Data Storage Specifications Business
Requirements and Information Delivery Strategy

Module 2 : Data warehouse Architecture and Infrastructure (Lectures : 8)

6. **Architectural components**

Concepts of Data warehouse architecture – Definition and architecture in the areas of Data acquisition, Data storage, and Information delivery
Distinguishing characteristics – Different objectives and scope, Data content, Complex analysis for faster response, Flexible and Dynamic, Metadata-driven etc
Architectural Framework – supporting flow of data, and the Management and Control module
Technical architecture – Data acquisition, Data storage, and Information delivery
Overview of the components of Architectural Types introduced in Module 1.

7. **Infrastructure for Data warehousing**

Distinction between architecture and infrastructure, Understanding of how data warehouse infrastructure supports its architecture
Components of physical infrastructure, Hardware and Operating systems for data warehouse, Database Software, Collection of Tools,
Data warehouse Appliances – evolution and benefits

8. **The role of Metadata**

Understanding the importance of Metadata
Metadata types by functional areas – Data acquisition, Data storage, and Information delivery
Business Metadata – overview of content and examples
Technical Metadata – overview of content and examples
Metadata Requirements, Sources of Metadata, Metadata management – challenges, Metadata Repository, Metadata integration and standards

Module 3 : Data Design and Data Preparation (Lectures : 9)

3. **Principles of Dimensional Modeling**

Data Design – Design decisions, Basics of Dimensional modeling, E-R modeling versus Dimensional modeling The STAR schema – illustration, Dimension Table, Fact Table, Factless Fact Table, Data granularity
STAR schema keys – Primary, Surrogate, and Foreign Advantages
of the STAR schema, STAR schema examples

4. **Data Extraction, Transformation, and Loading**

Overview of ETL, Requirements of ETL and steps
Data extraction – identification of sources and techniques
Data transformation – Basic tasks, Transformation types, Data integration and consolidation, Transformation for dimension

attributes

Data loading – Techniques and processes, Data refresh versus update, Procedures for Dimension tables, Fact tables : History and incremental loads
ETL Tool options

5. **Data Quality**
Importance of data quality, Challenges for data quality, Data quality tools, Data cleansing and purification, Master Data Management

Module 4 : Information access and delivery (Lectures : 10)

5. **Matching information to classes of users**
Information from Data warehouse versus Operational systems, Users of information – their needs and how to provide information
Information delivery – queries, reports, analysis, and applications
Information delivery tools – Desktop environment, Methodology and criteria for tool selection, Information delivery framework, Business Activity Monitoring, Dashboards and Scorecards

6. **OLAP in Data warehouse**
Overall concept of Online Analytical Processing (OLAP), OLAP definitions and rules, OLAP characteristics

Major features and functions of OLAP – General features, Dimensional analysis, Hypercubes, Drill Down and Roll Up, Slice and Dice, Rotation, Uses and Benefits
Familiarity with OLAP models – Overview of variations, MOLAP, ROLAP, HOLAP, DOLAP, Database OLAP, Web OLAP

7. **Data Warehouse and the web**
Web-enabled Data Warehouse – adapting data warehouse for the web
Web-based information delivery – Browser technology for data warehouse and Security issues
OLAP and Web – Enterprise OLAP, Web-OLAP approaches, OLAP Engine design

8. **Data Mining**
Overview of Data mining – Definition, Knowledge Discovery Process (Relationships, Patterns, Phases of the process), OLAP versus Data mining

Some aspects of Data mining – Association rules, Outlier analysis, Predictive analytics etc) Concepts of Data mining in a Data warehouse environment

Major Data Mining techniques – Cluster Detection, Decision Trees, Memory-based Reasoning, Link Analysis, Neural Networks, Genetic Algorithms etc

Data Mining Applications in industry – Benefits of Data mining, Discussion on applications in Customer Relationship Management (CRM), Retail, Telecommunication, Biotechnology, Banking and Finance etc

Books Recommended:

7. Data Warehousing Fundamentals for IT Professionals, Second Edition by Paulraj Ponniah, Wiley India

References:

2. Data Warehousing, Data Mining, & OLAP – Second Edition by Alex Berson and Stephen J. Smith, Tata McGraw Hill Education
3. Data warehouse Toolkit by Ralph Kimball, Wiley India

Sensor Networks
CS704D
Contracts: 3L
Credits- 3

Module I: Introduction and Overview [4L]
Learning Objective: To provide an overview about sensor networks and emerging technologies.

Overview of wireless networks, types, infrastructure-based and infrastructure-less, introduction to MANETs (Mobile Ad-hoc Networks), characteristics, reactive and proactive routing protocols with examples, introduction to sensor networks, commonalities and differences with MANETs, constraints and challenges, advantages, applications, enabling technologies for WSNs.

Module II: Architectures [9L]
Learning Objective: To study about the node and network architecture of sensor nodes and its execution environment.

Single-node architecture - hardware components, design constraints, energy consumption of sensor nodes , operating systems and execution environments, examples of sensor nodes, sensor network scenarios, types of sources and sinks – single hop vs. multi hop networks, multiple sources and sinks – mobility, optimization goals and figures of merit, gateway concepts, design principles for WSNs, service interfaces for WSNs.

Module III: Communication Protocols [9L]
Learning Objective: To understand the concepts of communication, MAC, routing protocols and also study about the naming and addressing in WSN.

Physical layer and transceiver design considerations, MAC protocols for wireless sensor networks, low duty cycle protocols and wakeup concepts - S-MAC , the mediation device protocol, wakeup radio concepts, address and name management, assignment of MAC addresses, routing protocols- classification, gossiping, flooding, energy-efficient routing, unicast protocols, multi-path routing, data-centric routing, data aggregation, SPIN, LEACH, Directed-Diffusion, geographic routing.

Module IV: Infrastructure Establishment [9L]
Learning Objective: To learn about topology control and clustering in networks with timing synchronization for localization services with sensor tasking and control.

Topology control, flat network topologies, hierarchical networks by clustering, time synchronization, properties, protocols based on sender-receiver and receiver-receiver synchronization, LTS, TPSN, RBS, HRTS, localization and positioning, properties and approaches, single-hop localization, positioning in multi-hop environment, range based localization algorithms – location services, sensor tasking and control.

Module V: Sensor Network Platforms and Tools [9L]
Learning Objective: To study about sensor node hardware and software platforms and understand the simulation and programming techniques.

Sensor node hardware, Berkeley motes, programming challenges, node-level software platforms, node-level simulators, state-centric programming, Tiny OS, nesC components, NS2 simulator, TOSSIM.

TEXT BOOKS

1. Holger Karl & Andreas Willig, “Protocols and Architectures for Wireless Sensor Networks”, John Wiley, 2005.
2. Feng Zhao & Leonidas J. Guibas, “Wireless Sensor Networks- An Information Processing Approach", Elsevier, 2007.

REFERENCES

1. Kazem Sohraby, Daniel Minoli, & Taieb Znati, “Wireless Sensor Networks- Technology, Protocols, and Applications”, John Wiley, 2007.
2. Anna Hac, “Wireless Sensor Network Designs”, John Wiley, 2003.
3. Thomas Haenselmann, "Sensor Networks", available online for free, 2008.

4. Edgar Callaway, "Wireless Sensor Networks: Architectures and Protocols", Auerbach, 2003.

Mobile Computing
CS704E
Contracts: 3L
Credits- 3

Introduction to Personal Communications Services (PCS): PCS Architecture, Mobility management, Networks signalling. Global System for Mobile Communication (GSM) system overview: GSM Architecture, Mobility management, Network signalling. **[5L**

General Packet Radio Services (GPRS): GPRS Architecture, GPRS Network Nodes. Mobile Data Communication: WLANs (Wireless LANs) IEEE 802.11 standard, Mobile IP.
[5L
Wireless Application Protocol (WAP): The Mobile Internet standard, WAP Gateway and Protocols, wireless mark up Languages (WML). Wireless Local Loop(WLL): Introduction to WLL Architecture, wireless Local Loop Technologies. **[7L**

Third Generation (3G) Mobile Services: Introduction to International Mobile Telecommunications 2000 (IMT 2000) vision, Wideband Code Division Multiple Access (W-CDMA), and CDMA 2000, Quality of services in 3G.
[7L

Global Mobile Satellite Systems; case studies of the IRIDIUM and GLOBALSTAR systems. Wireless Enterprise Networks: Introduction to Virtual Networks, Blue tooth technology, Blue tooth Protocols.
[7L

Server-side programming in Java, Pervasive web application architecture, Device independent example application
[8L

Text :
1. "Pervasive Computing", Burkhardt, Pearson
2. "Mobile Communication", J. Schiller, Pearson
3. "Wireless and Mobile Networks Architectures", Yi-Bing Lin & Imrich Chlamtac, John Wiley & Sons, 2001
4. "Mobile and Personal Communication systems and services", Raj Pandya, Prentice Hall of India, 2001.

Reference :
1. "Guide to Designing and Implementing wireless LANs", Mark Ciampa, Thomson learning, Vikas Publishing House, 2001.
2. "Wireless Web Development", Ray Rischpater, Springer Publishing,
3. "The Wireless Application Protocol", Sandeep Singhal, Pearson .
4. "Third Generation Mobile Telecommunication systems", by P.Stavronlakis, Springer Publishers,

Internet Technology
CS705A
Contracts: 3L
Credits- 3 34L
Module I-6L
Introduction (1L):
Overview, Network of Networks, Intranet, Extranet and Internet.

World Wide Web (1L):
Domain and Sub domain, Address Resolution, DNS, Telnet, FTP, HTTP.

Review of TCP/IP (1L):
Features, Segment, Three-Way Handshaking, Flow Control, Error Control, Congestion control, IP Datagram, IPv4 and IPv6.

IP Subnetting and addressing (1L):
Classful and Classless Addressing, Subnetting. NAT, IP masquerading, IP tables.

Internet Routing Protocol (1L):
Routing -Intra and Inter Domain Routing, Unicast and Multicast Routing, Broadcast.

Electronic Mail (1L):

POP3, SMTP.

Module II-9L

HTML (3L):

Introduction, Editors, Elements, Attributes, Heading, Paragraph. Formatting, Link, Head, Table, List, Block, Layout, CSS. Form, Iframe, Colors, Colorname, Colorvalue.

Image Maps (1L):

map, area, attributes of image area.

Extensible Markup Language (XML) (4L):

Introduction, Tree, Syntax, Elements, Attributes, Validation, Viewing. XHTML in brief.

CGI Scripts (1L):

Introduction, Environment Variable, GET and POST Methods.

Module III-10L

PERL (3L):

Introduction, Variable, Condition, Loop, Array, Implementing data structure, Hash, String, Regular Expression, File handling, I/O handling.

JavaScript (4L):

Basics, Statements, comments, variable, comparison, condition, switch, loop, break. Object – string, array, Boolean, reg-ex. Function, Errors, Validation.

Cookies (1L):

Definition of cookies, Create and Store a cookie with example.

Java Applets (2L):

Container Class, Components, Applet Life Cycle, Update method; Parameter passing applet, Applications.

Module IV-4L

Client-Server programming In Java (2L):

Java Socket, Java RMI.

Threats (1L):

Malicious code-viruses, Trojan horses, worms; eavesdropping, spoofing, modification, denial of service attacks.

Network security techniques (2L):

Password and Authentication; VPN, IP Security, security in electronic transaction, Secure Socket Layer (SSL), Secure Shell (SSH).

Firewall (1L):

Introduction, Packet filtering, Stateful, Application layer, Proxy.

Module v-5L

Internet Telephony (1L):

Introduction, VoIP.

Multimedia Applications (2L):

Multimedia over IP: RSVP, RTP, RTCP and RTSP. Streaming media, Codec and Plugins, IPTV.

Search Engine and Web Crawler (2L):

Definition, Meta data, Web Crawler, Indexing, Page rank, overview of SEO.

Reference:

1. Web Technology: A Developer's Perspective, N.P. Gopalan and J. Akilandeswari, PHI Learning, Delhi, 2013. (Chapters 1-5,7,8,9).

2. Internetworking Technologies, An Engineering Perspective, Rahul Banerjee, PHI Learning, Delhi, 2011. (Chapters 5,6,12)

Microelectronics & VLSI Design

CS705B

Contracts: 3L

Credits- 3 36L

Module	Content	Hour

1	**Introduction to VLSI Design**: VLSI Design Concepts, Moor's Law, Scale of Integration (SSI, MSI, LSI, VLSI, ULSI – basic idea only), Types of VLSI Chips (Analog & Digital VLSI chips, General purpose, ASIC, PLA, FPGA), Design principles (Digital VLSI – Concept of Regularity, Granularity etc), Design Domains (Behavioral, Structural, Physical), Y-Chart, Digital VLSI Design Steps.	6
2	**MOS structure**: E-MOS & D-MOS, Charge inversion in E-MOS, Threshold voltage, Flat-band voltage, Potential balance & Charge balance, Inversion, MOS capacitances. **Three Terminal MOS Structure:** Body effect. **Four Terminal MOS Transistor**: Drain current, I-V characteristics. Current-voltage equations (simple derivation). **Scaling in MOSFET**: Short Channel Effects, General scaling, Constant Voltage & Field scaling.] **CMOS**: CMOS inverter, Simple Combinational Gates - NAND gate and NOR Gate using CMOS.	10
3	**Micro-electronic Processes for VLSI Fabrication**: Silicon Semiconductor Technology- An Overview, Wafer processing, Oxidation, Epitaxial deposition, Ion-implantation & Diffusion, Cleaning, Etching, Photo-lithography – Positive & Negative photo-resist **Basic CMOS Technology** – (Steps in fabricating CMOS), Basic n-well CMOS process, p-well CMOS process, Twin tub process, Silicon on insulator **Layout Design Rule**: Stick diagram with examples, Layout rules.	10
4	**Hardware Description Language** – VHDL or Verilog Combinational & Sequential Logic circuit Design.	10

Text Books:

1. Digital Integrated Circuit, J.M.Rabaey, Chandrasan, Nicolic, Pearson Education.
2. CMOS Digital Integrated Circuit, S.M.Kang & Y.Leblebici, TMH.
3. Modern VLSI Design, Wayne Wolf, Pearson Education.
4. VHDL, Bhaskar, PHI.
5. Advance Digital Design Using Verilog , Michel D. Celliti, PHI

References:

1. Digital Integrated Circuits, Demassa & Ciccone, John Willey & Sons .
2. Modern VLSI Design: system on silicon, Wayne Wolf; Addison Wesley Longman Publisher
3. Basic VLSI Design, Douglas A. Pucknell & Kamran Eshranghian, PHI
4. CMOS Circuit Design, Layout & Simulation, R.J.Baker, H.W.Lee, D.E. Boyee, PHI

Control System
CS705C
Contracts: 3L
Credits- 3 36L
Module – I:
a) INTRODUCTION

Concepts of Control Systems- Open Loop and closed loop control systems and their differences- Different examples of control systems- Classification of control systems, Feed-Back Characteristics, Effects of feedback. Mathematical models – Differential equations, Impulse Response and transfer functions - Translational and Rotational mechanical systems [4L]

Module – I:
b) TRANSFER FUNCTION REPRESENTATION

Transfer Function of linear systems, Block diagram representation of systems considering electrical systems as examples -Block diagram algebra – Representation by Signal flow graph - Reduction using mason's gain formula.
[4L]

Module – II:
a) TIME RESPONSE ANALYSIS

Standard test signals - Time response of first order systems – Characteristic Equation of Feedback control systems, Transient response of second order systems - Time domain specifications – Steady state response - Steady state errors and error constants.
[4L]

b) STABILITY ANALYSIS IN S-DOMAIN
The concept of stability – Routh's stability criterion – limitations of Routh's stability.
Root Locus Technique: The root locus concept - construction of root loci-effects of adding poles and zeros to G(s)H(s) on the root loci. [5L]

Module – III:
a) FREQUENCY RESPONSE ANALYSIS
Introduction, Frequency domain specifications-Bode diagrams-Determination of Frequency domain specifications and transfer function from the Bode Diagram-Phase margin and Gain margin-Stability Analysis from Bode Plots. [5L]
b) : STABILITY ANALYSIS IN FREQUENCY DOMAIN
Polar Plots, Nyquist Plots Stability Analysis. [4L]

Module - IV :
a) CLASSICAL CONTROL DESIGN TECHNIQUES
Compensation techniques – Lag, Lead, Lead-Lag Controllers design in frequency Domain, PID Controllers. [5L]
b) STATE SPACE ANALYSIS OF CONTINUOUS SYSTEMS
Concepts of state, state variables and state model, derivation of state models from block diagrams, Diagonalization- Solving the Time invariant state Equations- State Transition Matrix and it's Properties – Concepts of Controllability and Observability [5L]

TEXT BOOKS:
Automatic Control Systems 8th edition– by B. C. Kuo 2003– John Wiley and son's.,
2. Control Systems Engineering – by I. J. Nagrath and M. Gopal, New Age International
(P) Limited, Publishers, 2nd edition.

REFERENCE BOOKS:
1. Modern Control Engineering – by Katsuhiko Ogata – Prentice Hall of India Pvt. Ltd., 3rd edition, 1998.
2. Control Systems Engg. by NISE 3rd Edition – John Wiley

Modelling & Simulation
CS705D
Contracts: 3L
Credits- 3

Module-I: Introduction to Modelling and Simulation :
Nature of Simulation. Systems , Models and Simulation, Continuous and Discrete Systems, system modelling, Components of a simulation study, Introduction to Static and Dynamic System simulation , Application areas, Advantages ,Disadvantages and pitfalls of Simulation. **6L**

Module –II : System Dynamics & Probability concepts in Simulation :
Exponential growth and decay models, Generalization of growth models ,
Discrete and Continuous probability functions, Continuous Uniformly Distributed Random Numbers,
Generation of a Random numbers, Generating Discrete distributions, Non-Uniform
Continuously Distributed Random Numbers, Rejection Method. **10L**

Module-III : Simulation of Queuing Systems and Discrete System Simulation :
Poisson arrival patterns, Exponential distribution, Service times, Normal Distribution Queuing Disciplines, Simulation of single and two server queue. Application of queuing theory in computer system. Discrete Events ,Generation of arrival patterns ,Simulation programming tasks , Gathering statistics, Measuring occupancy and Utilization , Recording Distributions and Transit times . **14L**

Module-IV : Analysis of Simulation output :
Sensitivity Analysis, Validation of Model Results **6L**

Text Books:
1. Jerry Banks, John Carson, B.L.Nelson and D.M.Nicol " Discrete Event System Simulation", Fifth Edition, Pearson.
9. Narsingh Deo, 1979, System Simulation with Digital Computers, PHI.
10. Geoffrey Gordon, "System Simulation", PHI.

11. Averill M. Law and W.David Kelton, “Simulation Modelling and Analysis”, Third Edition, McGraw Hill
12. J. N. Kapoor.. Mathematical Modelling, Wiley eastern Limited.

Reference Books:

1. Sankar Sengupta, "System Simulation and Modeling", Pearson.
2. C.Dennis Pegden, Robert E.Shannon and Randall P.Sadowski, 1995, Introduction to Simulation using SIMAN, 2nd Edn., Tata McGraw-Hill.
3. A.M.Law and W.D.Kelton.. Simulation Modelling and Analysis, T.M.H. Edition.

Practical

Group Discussion
HU781
Contracts: 3L
Credits- 2

To be prepared

Software Engineering Lab
CS791
Contracts: 3L
Credits- 2

Assignments to be given from the following

1. Preparation of requirement document for standard application problems in standard format.(e.g Library Management System, Railway Reservation system, Hospital management System, University Admission system)

2. Project Schedule preparation .

3. Use Case diagram,Class diagram,Sequence diagram and prepare Software Design Document using tools like Rational Rose.(For standard application problems)

4. Estimation of project size using Function Point(FP) for calculation.

5. Design Test Script/Test Plan(both Black box and White Box approach)

6. Compute Process and Product Metrics (e.g Defect Density,Defect Age,Productivity,Cost etc.)>Also by Cost Estimation models.

Pattern Recognition Lab
CS793A
Contracts: 3L
Credits- 2

Efficient algorithms for nearest neighbour classification,
Example problem on Bayes classifier,
Decision tree construction.
Implementation of Linear Discriminant Function,
Implementation of Support Vector Machine.

Soft Computing Lab
CS793B
Contracts: 3L
Credits- 2

In this laboratory the students need to implement the soft computing tools in Matlab. Some exposure in C also can be used for neural network and Genetic Algorithm.
A sample assignment list is given below:

FUZZY LOGIC:

1. Write a Matlab program to implement the different Fuzzy Membership functions.
2. Write a Matlab program to implement Fuzzy set operations and its properties.
3. Write a Matlab code to implement composition of Fuzzy and Crisp Relations.

4. Write Matalab code to implement Fuzzy Information System (develop the system using command line and GUI based Fuzzy toolbox)

Neural network:

5. Write Matlab code to implement McCulloh-Pitts neural network for generate AND, OR functions.
6. Write Matlab code to implement Perceptron learning for particular set of problem.
7. Write Matlab code for OR function with bipolar inputs and targets using Adaline network.
8. Write Matlab code for XOR function with bipolar inputs and targets using Madaline network.
9. Write C program to implement McCulloh-Pitts model to generate AND, OR functions.

Genetic Algorithm

10. Write a Matlab code for maximizing F(x)=x2, , where x ranges from say 0 to 31 using Genetic Algorithm.
11. Use of Genetic Algorithm toolbox in matlab for optimization problem solving.
12. Implantation Simple Genetic Algorithm in C for solving optimization problem.

Artificial Intelligence Lab

CS793C

Contracts: 3L

Credits- 2

Assignments to be framed

Programming Languages such as PROLOG & LISP

Image Processing Lab

CS793D

Contracts: 3L

Credits- 2

1. Display of Grayscale Images.
2. Histogram Equalization.
3. Non-linear Filtering.
4. Edge detection using Operators.
5. 2-D DFT and DCT.
6. Filtering in frequency domain.
7. Display of color images.
8. Conversion between color spaces.
9. DWT of images.
10. Segmentation using watershed transform.

Internet Technology Lab

CS795A

Contracts: 3L

Credits- 2

Applet

1. Create a banner using Applet
2. Display clock using Applet
3. Create different shapes using Applet
4. Fill colors in shapes using Applet
5. Goto a link using Applet
6. Create an event listener in Applet
7. Display image using Applet
8. Open a link in a new window using Applet
9. Play sound using Applet
10. Read a file using Applet
11. Write to a file using Applet

JavaScript

12. Validate the fields of a form using JavaScript.
13. Guess a number based on user input.
14. Program on image rollover using JavaScript.

15. Display clock using JavaScript.
16. Prompt, alert, array, looping in JavaScript.
17. Calculator using JavaScript.
18. Validate e-mail, phone no. using reg-ex in JavaScript. Perl

19. Write a perl script to implement associative array.
20. Write a perl script to implement the regular expression as follows:

a). If a string contains any vowel, count the total number of vowels. b). If a string starts with MCA and end with bw, print 1 else 0.
c). If string starts with 0 or any no. a's, then print 1 else 0.
21. Write an html code to call a perl script from cgi-bin.
22. Implement the following with regular expression in Perl:
a). a*bc
b). a* at least 2 b's c).
a*exactly 3 b's
23. A simple File operation using Perl.

Client Server Programming

24. Write a socket program to get the current date and time from the server.
25. Write a socket program where the client will send lowercase letters and the server will return uppercase letter.
26. Write a server and a client program to implement TCP chat server-client.
27. Create a simple calculator application using Java RMI.

HTML

1. Start your web page with an <html> tag
   i) Add a heading.
   ii) Add a title.
   iii) Start the <body> section.
   iv) Add the following text using <H1> and </H1> tags:
This Web page was designed by (your name)
   v) Add the following text using <H2> and </H2> tags: My HTML assignment
   vi) Add a horizontal line
   vii) Insert an image to your web page.
Note: You should then refer to your image with just the filename, and NOT the entire pathname to the file.
   viii) Add another horizontal line.
   ix) Enter a paragraph of text.
      Write about things you have learned in html.
   Make sure the text in this paragraph is a color other than black, but something one can see.
      Add a link that takes you to your favorite webpage.
x) Start a new paragraph. Add a three item ordered list. Make it creative (don't just say item 1, item 2, etc… and keep it clean)!
   xi) Close out your body and html tags.

2. Start your web page with an <html> tag
   i) Add a heading.
   ii) Add a title.
   iii) Start the <body> section.
   iv) Start a new paragraph. Use

alignment attribute,
Use bold, italic, underline tags,

Use font tag and associated attributes, Use
heading tags,
Use preserve tag,
Use non breaking spaces (escape character).

3. Start your web page with an <html> tag
i) Add a heading.
ii) Add a title.
iii) Start the <body> section.
iv) Start a new paragraph.

Create Hyperlinks:
(a) Within the HTML document.
(b) To another URL.
(c) To a file that can be rendered in the browser.

4. Start your web page with an <html> tag
i) Add a heading.
ii) Add a title.
iii) Start the <body> section.

Create an unordered list,
Create an ordered list, Use
various bullet styles, Created
nested lists,
Use the font tag in conjunction with lists,
Create definition lists,
Use graphics as bullets.

5. Start your web page with an <html> tag
i) Add a heading.
ii) Add a title.
iii) Start the <body> section.

a) Create a simple table
Create borders and adjust border size.
Adjust table cell spacing.
Change border color.
Change table background color.

b) Align a new table on HTML page.
Perform cell text alignment,
Create multi-column tables,
Display information about your academic qualification into this table.

6. Start your web page with an <html> tag
i) Add a heading.
ii) Add a title.
iii) Start the <body> section.

Create a frameset:
Use frame tags,
Create vertical (column) frames,
Create horizontal (row) frames,
Create complex framesets,

Use the hyperlink tag to target displaying an HTML page to another frame.

7. Start your web page with an <html> tag

i) Add a heading.
ii) Add a title.
iii) Start the <body> section.

Create a simple HTML form.

Use the input tag to create a: text box; text area box; check box; list box; radio button; password field; popup menu; hidden field. Use submit and reset buttons. Create an admission form using the above information.

8. Create a web page that will include an image. Then create image map to watch different parts of that image closely.

9. Using frames as an interface, create a series of web pages where the theme is to provide resources (internet, intranet, static HTML pages) pertaining to the subject of HTML. Ideally, your goal is to create a resource that you can use long after this module when needing information on HTML. As a minimum requirement to this assignment your webpage should:

• Consist of at least 3 frames.
• Contain at least 5 URLs to internet and/or intranet sites that you can reference as part of your job.
• Contain at least 5 references to documents that you have created that you use on a regular basis.
• Contain at least 5 references to documents others have created that you use on a regular basis.
• Be organized in a fashion that is logical and intuitive to you.
• Is done with enough quality that you would not be opposed to it being a link at another site.

10. Create a web page as you wish and the html elements of the page will be styled by CSS.

XML

1. Write a XML program that will create an XML document which contains your mailing address.

2. Write a XML program that will create an XML document which contains description of three book category.

3. Create an XML document that contains the name and price per pound of coffee beans.
i) In your XML document mention all properties of XML declaration.
ii) The root element has name <coffee_bean>
iii) Create nested elements for different types of coffee.
iv) Validate the document and if any parsing error is present, fix them.

4. Create an XML document that contains airline flight information.
i) In your XML document mention all properties of XML declaration.
ii) The root element has name <airlines>
iii) Create three nested <carrier> elements for three separate airlines. Each element should include a name attribute.
iv) Within each <carrier> nest at least two <flight> ,each of which contains departure_city, destination_ city, fl_no, dept_time.
v) Validate the document and if any parsing error is present fix them.

5. Create an XML version of your resume. Include elements such as your name and position desired. Nest each of your former employers within an <employer> element. Also, nest your educational experience within an <education> element. Create any other nested elements that you deem appropriate, such as <references> or <spcl_skills> elements.

6. Create a DTD on product catalog.

Microelectronics & VLSI Lab
CS795B
Contracts: 3L
Credits- 2
To be Implemented..

Control System Lab
CS795C

Contracts: 3L
Credits- 2

Sl.No.	Name of the Experiment	Periods
·	Familiarization with MATLAB Control System tool Box, MATLAB- SIMULINK tool box & pSPICE.	3
·	Determination of step response for 1st order & 2nd order system with amity feedback on CRO & calculation of control system specifications for variations of system design.	3
·	Simulation of step response & impulse response for Type-I & Type-II system with unity feedback using MATLAB & pSPICE.	3
·	Determination of root locus, Bode-plot, Nyquist Plot, using MATLAB control system toolbox for a given 2nd order transfer function & determination of different control system specifications.	6
·	Determination of PI, PD, and PID controller action on 1st order simulated process.	3
·	Determination of approximate transfer function experimentally using Bode Plot.	3
·	Evaluation of steady-state error, setting time, percentage peak overshoots, gain margin, phase margin with addition of lead compensator in forward path transfer functions using MATLAB & pSPICE.	3
·	Study of position control system using servomotor.	3
·	Design and hardware implementation of a temperature controller using microprocessor/microcontroller.	6

Modelling & Simulation Lab
CS795D
Contracts: 3L
Credits- 2

In this laboratory the students will develop different simulation models. Students also may use any standard software to develop the models.(Using MATLAB?SCILAB/Any other simulation package)
A sample assignment list is given below:

1. Simulate CPU scheduling algorithm using queuing system a) FCFS b) SJF c) Priority Algo
2. Simulate congestion control algorithms.
3. Simulate disk scheduling algorithms.
4. Simulate Telephone system model
5. Simulate traffic system in computer networks

VIII Semester
Theory

Organisational Behaviour
HU801A
Contracts: 2L
Credits- 2

1. Organizational Behaviour: Definition, Importance, Historical Background, Fundamental Concepts of OB, Challenges and Opportunities for OB. **[2]**
2. Personality and Attitudes: Meaning of personality, Personality Determinants and Traits, Development of Personality, Types of Attitudes, Job Satisfaction. **[2]**
3. Perception: Definition, Nature and Importance, Factors influencing Perception, Perceptual Selectivity, Link between Perception and Decision Making. **[2]**
4. Motivation: Definition, Theories of Motivation - Maslow's Hierarchy of Needs Theory, McGregor's Theory X & Y, Herzberg's Motivation-Hygiene Theory, Alderfer's ERG Theory, McClelland's Theory of Needs, Vroom's Expectancy Theory. **[4]**
5. Group Behaviour: Characteristics of Group, Types of Groups, Stages of Group Development, Group Decision Making. **[2]**

6. Communication: Communication Process, Direction of Communication, Barriers to Effective Communication. **[2]**
7. Leadership: Definition, Importance, Theories of Leadership Styles. **[2]**
8. Organizational Politics: Definition, Factors contributing to Political Behaviour. **[2]**

9. Conflict Management: Traditional vis-a-vis Modern View of Conflict, Functional and Dysfunctional Conflict, Conflict Process, Negotiation – Bargaining Strategies, Negotiation Process. **[2]**
10. Organizational Design: Various Organizational Structures and their Effects on Human Behaviour, Concepts of Organizational Climate and Organizational Culture. **[4]**

References:

1. Robbins, S. P. & Judge, T.A.: Organizational Behavior, Pearson Education, 15th Edn.
2. Luthans, Fred: Organizational Behavior, McGraw Hill, 12th Edn.
3. Shukla, Madhukar: Understanding Organizations – Organizational Theory & Practice in India, PHI
4. Fincham, R. & Rhodes, P.: Principles of Organizational Behaviour, OUP, 4th Edn.
5. Hersey, P., Blanchard, K.H., Johnson, D.E.- Management of Organizational Behavior Leading Human Resources, PHI, 10th Edn.

Or

Project Management
HU801B
Contracts: 2L
Credits- 2

1. Project Management Concepts: Concept and Characteristics of a Project, Importance of Project Management.**[1]**
2. Project Planning: Project Evaluation, Financial Sources, Feasibility Studies. **[4]**
3. Project Scheduling: Importance of Project Scheduling, Work Breakdown Structure and Organization Breakdown Structure, Scheduling Techniques – Gantt Chart and LOB, Network Analysis – CPM/PERT. **[6]**
4. Time Cost Trade-off Analysis – Optimum Project Duration. **[2]**
5. Resource Allocation and Leveling. **[2]**
6. Project Life Cycle. **[2]**
7. Project Cost – Capital & Operating Costs, Project Life Cycle Costing, Project Cost Reduction Methods. **[2]**
8. Project Quality Management: Concept of Project Quality, TQM in Projects, Project Audit. **[1]**
9. Software Project Charateristics and Mangement **[2]**
10. IT in Projects: Overview of types of Softwares for Projects, Major Features of Project Management Softwares like MS Project, Criterion for Software Selection. **[2]**

References

1. Gopalkrishnan P. and Rama Mmoorthy: Text Book of Project Management, Macmillan
2. Nicholas John M.: Project Management for Business and Technology – Principles and Practice, Prentice Hall India, 2nd Edn.
3. Levy Ferdinand K., Wiest Jerome D.: A Management Guide to PERT/CPM with GERT/PDM/DCPM and other networks, Prentice Hall India, 2nd Edn.
4. Mantel Jr., Meredith J. R., Shafer S. M., Sutton M. M., Gopalan M. R.: Project Management: Core Text Book, Wiley India, 1st Indian Edn.
5. Maylor H.: Project Management, Pearson, 3rd Edn.
6. Nagarajan K.: Project Management, New Age International Publishers, 5th Edn.
7. Kelkar. S.A, Sotware Project Management: A concise Study, 2nd Ed., PHI

Advanced Computer Architecture
CS801A
Contracts: 3L
Credits- 3

Computer Architecture and Organization-Review, Fundamentals of Computer Design, Technology Trends Cost Performance Analysis (3L)
Parallel Processing Architectures- Taxonomy- SISD, MISD, SIMD,MIMD, PRAM models (3L)
Data and Resource Dependencies, Program Partitioning and Scheduling, Control Flow vs. Data Flow (3L)

Network topologies-Static, Dynamic, Types of Networks (3L)
RISC vs. CISC, Memory Hierarchy, Virtual Memory (4L)

Concepts of Pipelining, Instruction Pipelining, dynamic pipelining, arithmetic pipelines. (4L)
Multiprocessors- Multistage Networks, Cache Coherence, Synchronization, Message- passing (4L)
Vector Processing Principles- Instruction types, Compound, Vector Loops, Chaining (4L)
Array Processors- Structure, Algorithms (3L)
Data Flow Architecture- Graphs. Petri Nets, Static and Dynamic DFA, VLSI Computations (4L)
Parallel Programming Models, Languages, Compilers (4L)

Books:

Computer Architecture and Parallel Processing- Kai Hwang and A. .Brigggs International Edition, McGraw Hill
Advanced Computer Architecture: D. Sima, T. fountain, P. Kacsuk, Pearson
Parallel Computer Architecture: D. Culler, J.P.Singh, A.Gupta, Elsevier

Parallel Computing

CS801B

Contracts: 3L

Credits- 3

37L

Module I

Introduction.-Parallel Processing Environment- Pipelining and Data Parallelism, Scalability, Flynn's Taxonomy,. (3L)
Parallel Processing organization- Mesh, Hyper-tree, Pyramid, Butterfly, Hypercube network (4L)

Module II

Parallel Algorithms –Structure, cost, Analysis ;Elementary Algorithms: Broadcast, Prefix sums, All sums (4L) Algorithms on Selection problem, Merging-Odd-even merging network, CREW Merging, N-ary searching (6L)
Matrix Transposition ,Matrix Multiplications- 2D Mesh SIMD ,Hypercube SIMD, Shuffle-Exchange SIMD models. Discrete Fourier Transform, Fast Fourier Transform (6L)

Module III

Linear system of equations- Gaussian Elimination, Gauss-Seidel algorithm, Jacobi algorithm (3L)
Sorting – Enumeration sort, Odd-even transposition sort, Bitonic merge
Ellis's Algorithm (3L)

Module IV

Graph Algorithms, Spanning Tree Algorithms, (4L)
Parallel Programming Languages –FORTRAN 90, OCCAM(4L)

Books for reference:

1. Parallel Computing –Theory and Practice -Michael J. Quinn (McGraw Hill Inc.)
2. Design and Analysis of Parallel Algorithms- S.G. Akl (PH)

Natural Language Processing

CS801C

Contracts: 3L

Credits- 3

Module I

Regular Expressions and Automata☹Recap) [**2L**]
Introduction to NLP, Regular Expression, Finite State Automata

Tokenization [**5L**]
Word Tokenization, Normalization, Sentence Segmentation, Named Entity Recognition,
Multi Word Extraction, Spell Checking – Bayesian Approach, Minimum Edit Distance

Morphology [**4L**]
Morphology – Inflectional and Derivational Morphology, Finite State Morphological Parsing, The Lexicon and Morphotactics, Morphological Parsing with Finite State Transducers, Orthographic Rules and Finite State Transducers, Porter Stemmer

Module II

Language Modeling [**4L**]

Introduction to N-grams, Chain Rule, Smoothing – Add-One Smoothing, Witten-Bell Discounting; Backoff, Deleted Interpolation, N-grams for Spelling and Word Prediction, Evaluation of language models.

Hidden Markov Models and POS Tagging [**4L**]

Markov Chain, Hidden Markov Models, Forward Algorithm, Viterbi Algorithm, Part of Speech Tagging – Rule based and Machine Learning based approaches, Evaluation

Module III

Text Classification [**4L]**

Text Classification, Naïve Bayes' Text Classification, Evaluation, Sentiment Analysis – Opinion Mining and Emotion Analysis, Resources and Techniques

Context Free Grammar [**5L**]

Context Free Grammar and Constituency, Some common CFG phenomena for English, Top-Down and Bottom-up parsing, Probabilistic Context Free Grammar, Dependency Parsing

Module IV

Computational Lexical Semantics [**4L**]

Introduction to Lexical Semantics – Homonymy, Polysemy, Synonymy, Thesaurus – WordNet, Computational Lexical Semantics – Thesaurus based and Distributional Word Similarity

Information Retrieval [**5L**]

Boolean Retrieval, Term-document incidence, The Inverted Index, Query Optimization, Phrase Queries, Ranked Retrieval – Term Frequency – Inverse Document Frequency based ranking, Zone Indexing, Query term proximity, Cosine ranking, Combining different features for ranking, Search Engine Evaluation, Relevance Feedback

Books:

1. Speech and Language Processing, Jurafsky and Martin, Pearson Education

2. Foundation of Statistical Natural Language Processing, Manning and Schutze, MIT Press

Cryptography & Network Security
CS801D
Contracts: 3L
Credits- 3

Total: - 38 Lectures

Module1: Attacks on Computers & Computer Security (5L)

Introduction, Need for Security, Security approaches, Principles of Security, Types of attack.

Module2: Cryptography: Concepts & Techniques (7L)

Introduction, Plaintext & Cipher text, Substitution Techniques, Transposition Techniques, Encryption & Decryption, Symmetric & Asymmetric key Cryptography, Key Range & Key Size

Module3: Symmetric Key Algorithm (8L)

Introduction, Algorithm types & Modes, Overview of Symmetric Key Cryptography, DES(Data Encryption Standard) algorithm, IDEA(International Data Encryption Algorithm) algorithm, RC5(Rivest Cipher 5) algorithm.

Module4: Asymmetric Key Algorithm, Digital Signature and RSA (5L)

Introduction, Overview of Asymmetric key Cryptography, RSA algorithm, Symmetric & Asymmetric key Cryptography together, Digital Signature, Basic concepts of Message Digest and Hash Function (Algorithms on Message Digest and Hash function not required).

Module5: Internet Security Protocols, User Authentication (6L)

Basic Concepts, SSL protocol, Authentication Basics, Password, Authentication Token, Certificate based Authentication, Biometric Authentication.

Module6 : Electronic Mail Security (4L)

Basics of mail security, Pretty Good Privacy, S/MIME.

Module7: Firewall (3L)

Introduction, Types of firewall, Firewall Configurations, DMZ Network Text

:

1. "Cryptography and Network Security", William Stallings, 2nd Edition, Pearson Education Asia

2. "Network Security private communication in a public world", C. Kaufman, R. Perlman and M. Speciner, Pearson

3. Cryptography & Network Security: Atul Kahate, TMH.

Reference :

1. "Network Security Essentials: Applications and Standards" by William Stallings, Pearson

2. "Designing Network Security", Merike Kaeo, 2nd Edition, Pearson Books

3. "Building Internet Firewalls", Elizabeth D. Zwicky, Simon Cooper, D. Brent Chapman, 2nd Edition, Oreilly

4. "Practical Unix & Internet Security", Simson Garfinkel, Gene Spafford, Alan Schwartz, 3rd Edition, Oreilly

Business Analytics
CS801E
Contracts: 3L
Credits- 3
Total: - 38 Lectures

Module 1: Foundations of Business Analytics (4L)
Introduction to Business Analytics, Analytics on Spreadsheets.

Module 2: Product-Market Fit: Gap Analysis (6L)
Gap Analysis, Carrying Out Gap Analysis, Steps in Gap Analysis, Conducting a Representative Survey for Gap Analysis, Predicting Consumer Behaviour and Gap Analysis in Smartphone Market.

Module 3: Analytical Modeling by Factor and Cluster Analysis (8L)
Factor Analysis Concepts, Application of Factor Analysis
Concepts of Cluster Analysis, Similarity Measures, Application of Cluster Analysis.

Module 4: Analytical Modeling by Logistics Regression and Discriminant Analysis (10L)
Linear Discriminant Analysis Model, Predictive Modeling using Discriminant Analysis, Application of Linear Discriminant Analysis for Credit Scoring of Loan Applicants.
Theoretical Formulation of Logistics Regression, Mathematical Interpretation of Logistics Regression, Indicator for Model Fit, Applying Logistics Regression,
Application of Logistics Regression in Predicting Risk in Portfolio Management
Testing the Reliability/Consistency of the Different Factors Measured.

Module 5: Segmentation of primary target market by Heuristic Modeling (4L)
Introduction to RFM Analysis
Enhancing Response Rates with RFM Analysis.

Module 6: Segmentation of target market based on large databases using Decision Tree approach. (6L)
Introduction to Chi-square Automatic Interaction Detection (CHAID)
Predictive Modelling by CHAID.

Text:

1. "Business Analytics: An Application Focus", Purba Halady Rao, Prentice Hall.
2. "Business Analytics" James R. Evans, Pearson.

Reference:

1. "Modeling Techniques in Predictive Analytics", Thomas W. Miller, Pearson
2. "Enterprise Analytics: Optimize Performance, Process, and Decisions Through Big Data", Thomas H. Davenport, Pearson.
3. "Fundamentals of Business Analytics", Seema Acharya, Wiley India.

4. "Business Intelligence: A Managerial Perspective on Analytics", Ramesh Sharda, Dursun Delen, Efraim Turban, David King, Prentice Hall

Technology Management
CS802A
Contracts: 3L
Credits- 3

:To be Implemented.

Cyber law and Security Policy
CS802B
Contracts: 3L
Credits- 3

Module – 1A: *Introduction of Cybercrime*: [4]
What is cybercrime?, Forgery, Hacking, Software Piracy, Computer Network intrusion
Module – 1B: *Category of Cybercrime*: [4]
how criminals plan attacks, passive attack, Active attacks, cyberstalking.

Module – 2: *Cybercrime Mobile & Wireless devices:* [8]
Security challenges posted by mobile devices, cryptographic security for mobile devices, Attacks on mobile/cellphones, Theft, Virus, Hacking. Bluetooth; Different viruses on laptop.

Module -3: *Tools and Methods used in Cyber crime:* [8]
Proxy servers, panword checking, Random checking, Trojan Horses and Backdoors; DOS & DDOS attacks; SQL injection: buffer over flow.

Module – 4A: *Phishing & Identity Theft*: [4]
Phising methods, ID Theft; Online identity method.
Module – 4B: *Cybercrime & Cybersecurity*: [4]
Legal aspects, indian laws, IT act, Public key certificate

Text: Cyber security by Nina Gobole & Sunit Belapune; Pub: Wiley India.

Optical Networking
CS802C
Contracts: 3L
Credits- 3

Optical Networks: [36 hours]

Module – 1: [10]

Optical communications - Basics of: [2]
Sources. Transmitters.
Modulators. Optical
fiber. Photodetectors,
and Receivers.

Switching in networks.[2]
Circuit switched.
Packet switched. Cell
switched.
Virtual circuit switched.
Burst switched (fast circuit switched).

Transmission [1]
3. Asynchronous.
4. Synchronous.

Layering in packet switched networks. [2]
8. Motivation.

9. Commonly used abstraction,

Physical layer.
Data link layer.
Network layer.
Transport layer.
Application layer.

Layering in circuit switched networks. [3]

12. Physical layer.
13. Multiplexing standards.
14. Signalling - CAS, CCS.
15. SS7 concept.

Module – 2: [8]

Data plane, management plane, control plane - concept. [1]

First generation networks. [2]

l) SDH/SONET.
m) Computer interconnections - ESCON, Fiber Channel, HIPPI.
n) FDDI.
o) ATM.
p) DQDB.

Components – description. [3]

6. Mode locked laser (for ps pulses).
7. Tunable filters.
8. Multiplexers.
9. Demultiplexers.
10. Tunable wavelength convertors.
11. Optical amplifiers.
    a. Fiber - EDFA.
    b. SOA.
12. Tunable transmitters.
13. Tunable receivers.
14. Dispersion compensating fibers. Multiplexing

techniques. [2]

12. SDM.
13. TDMA.
14. WDMA (OFDMA).
    1. DWDM.
    2. SCM.
15. CDMA.

Module – 3 : [9]

Protocols for single channel broadcast networks. (recapitulation) [1]

12. ALOHA, CSMA/CD.
13. Problems with CSMA/CD.
14. Definition of high speed network.

Classification of multiple access methods. (recapitulation) [1]

11. Random access.
12. Reserved acces.
13. Scheduled access.

Multichannel multiple access protocols. [2]

3. Desirable charactersticks of protocol.
    1. Scalability.
    2. Fairness.
4. TTTR.
5. TTFR.
6. FTTR.
7. FTFR.
8. Problem of wavelength stability.

Multihop WDM network. [2]

xii. Shufflenet.
xiii. MSN.

Wavelength routed networks. [3]

14. Mesh.
15. Ring-Traffic grooming problem.

Module – 4: [9]
IP over Optical framework. [2]

- ASON.
- MPëS.

Burst switched network (bufferless networks) [1] All-optical circuit switches. [1]
All-optical packet switches. [3]

iii) Broadcast and select.
iv) Wavelength routed.
v) Space switch based.
vi) Discussion on various switch architectures.
vii) Packet buffering techniques.
viii)Travelling type.
ix) Recirculating type.

Protection and restoration. [2]

- Restoration mechanism.
- Restoration timing issues.
- Path protection.
- Span protection.
- P-cycles.

Text:
References:
1. WDM Networks: Biswanath Mukherjee.
2. Optical Networks - A Practical Perspective: Rajiv Ramaswamy & Kumar Sivarajan.

Low Power Circuits & Systems
CS802D
Contracts: 3L
Credits-3

Basics of MOS circuits: MOS Transistor structure and device modeling; MOS Inverters; MOS Combinational Circuits – Different Logic Families

Sources of Power dissipation: Dynamic Power Dissipation: Short Circuit Power; Switching Power; Gliching Power: Static Power Dissipation

Supply Voltage Scaling Approaches: Device feature size scaling; Multi-Vdd Circuits; Architectural level approaches: Parallelism, Pipelining; Voltage scaling using high-level transformations; Dynamic voltage scaling; Power Management.

Switched Capacitance Minimization Approaches: Hardware Software Tradeoff; Bus Encoding; Two's complement Vs Sign Magnitude; Architectural optimization; Clock Gating; Logic styles

Leakage Power minimization Approaches: Variable-threshold-voltage CMOS (VTCMOS) approach; Multi-threshold-voltage CMOS (MTCMOS) approach ; Dual-Vt assignment approach (DTCMOS); Transistor stacking.

Special Topics: Adiabatic Switching Circuits; Battery-aware Synthesis; Variation tolerant design
References:
1. Sung_Mo Kang, Yusuf Leblebici, CMOS Digital Integrated Circuits, Tata McGraw Hill
2. Neil H. E. Weste and K. Eshraghian, Principles of CMOS VLSI Design, 2nd Edition, Addison Wesley (Indian reprint).
3. A. Bellamour, and M. I. Elmasri, *Low Power VLSI CMOS Circuit Design*, Kluwer Academic Press, 1995
4. Anantha P. Chandrakasan and Robert W. Brodersen, Low Power Digital CMOS Design, Kluwer Academic Publishers, 1995
5. Kaushik Roy and Sharat C. Prasad, Low-Power CMOS VLSI Design, Wiley-Interscience, 2000

E Commerce
CS802E

Syllabus for B.Tech(Computer Science & Engineering) Up to Fourth

Revised Syllabus of B.Tech CSE (for the students who were admitted in Academic Session 2010-

Contracts: 3L

Credits-3

Introduction to E-Commerce [6L]: Definition, Scope of E-Commerce, Hardware requirements, E-Commerce and Trade Cycle, Electronic Markets, Electronic Data Interchange and Internet Commerce.
Business to Business E-Commerce [7L]: Electronic Markets, Electronic Data Interchange (EDI): Technology, Standards (UN/EDIFACT), Communications, Implementations, Agreements, Security, EDI and Business, Inter-Organizational E-commerce.
Legal issues [5L]: Risks: Paper Document vs. Electronic document, Authentication of Electronic document, Laws, Legal issues for Internet Commerce: Trademarks and Domain names, Copyright, Jurisdiction issues, Service provider liability, Enforceable online contract.
Security Issues [6L]: Security Solutions: Symmetric and Asymmetric Cryptosystems, RSA, DES, and Digital Signature, Protocols for secure messaging, Secure Electronic Transaction (SET) Protocol, Electronic cash over internet, Internet Security.
Business to Consumer E-Commerce [8L]: Consumer trade transaction, Internet, Page on the Web, Elements of E-Commerce with VB, ASP, SQL.
E-business [7L]: Internet bookshops, Software supplies and support, Electronic Newspapers, Internet Banking, Virtual Auctions, Online Share Dealing, Gambling on the net, E-Diversity, Case studies through internet.
Books:

1. E-Commerce-Strategy, Technologies & Applications by David Whitley, TMH
2. E-Commerce- The cutting edge of business by Kamlesh K. Bajaj, TMH
3. E-Commerce through ASP by W Clarke- BPB
4. Beginning E-Commerce with VB, ASP, SQL Server 7.0 & MTS by Mathew Reynolds, Wrox Publishers
5. Global Electronic Commerce- Theory and Case Studies by J. Christopher Westland and Theodore H. K Clark, University Press

Robotics
CS802F
Contracts: 3L
Credits- 3

No	Topic	Number of Lectures
	Module 0: Preface, Information for Students and Teachers, Acknowledgement	
1	**Module 1: Introduction**	1
	Introduction -- brief history, types, classification and usage, Science and Technology of robots, Some useful websites, textbooks and research journals.	
2	**Module 2: Elements of robots – links, joints, actuators, and sensors**	5
	Position and orientation of a rigid body, Homogeneous transformations, Representation of joints, link representation using D-H parameters, Examples of D-H parameters and link transforms, different kinds of actuators – stepper, DC servo and brushless motors, model of a DC servo motor, Types of transmissions, Purpose of sensors, internal and external sensors, common sensors – encoders, tachometers, strain gauge based force-torque sensors, proximity and distance measuring sensors, and vision.	
3	**Module 3: Kinematics of serial robots**	4
	Introduction, Direct and inverse kinematics problems, Examples of kinematics of common serial manipulators, workspace of a serial robot, Inverse kinematics of constrained and redundant robots, Tractrix based approach for fixed and free robots and multi-body systems, simulations and experiments, Solution procedures using theory of elimination, Inverse kinematics solution for the general 6R serial manipulator.	
4	**Module 4: Kinematics of parallel robots**	5
	Degrees-of-freedom of parallel mechanisms and manipulators, Active and passive joints, Constraint and loop-closure equations, Direct kinematics problem, Mobility of parallel manipulators, Closed-from and numerical solution, Inverse kinematics of parallel manipulators and mechanisms, Direct kinematics of Gough-Stewart platform.	
5	**Module 5: Velocity and static analysis of robot manipulators**	5
	Linear and angular velocity of links, Velocity propagation, Manipulator Jacobians for serial and parallel manipulators, Velocity ellipse and ellipsoids, Singularity analysis for serial and parallel manipulators, Loss and gain of degree of freedom, Statics of serial and parallel manipulators, Statics and force transformation matrix of a Gough-Stewart platform, Singularity analysis and statics.	

6	**Module 6: Dynamics of serial and parallel manipulators**	4
	Mass and inertia of links, Lagrangian formulation for equations of motion for serial and	

	parallel manipulators, Generation of symbolic equations of motion using a computer, Simulation (direct and inverse) of dynamic equations of motion, Examples of a planar 2R and four-bar mechanism, Recursive dynamics, Commercially available multi-body simulation software (ADAMS) and Computer algebra software Maple.	
7	**Module 7: Motion planning and control**	6
	Joint and Cartesian space trajectory planning and generation, Classical control concepts using the example of control of a single link, Independent joint PID control, Control of a multi-link manipulator, Non-linear model based control schemes, Simulation and experimental case studies on serial and parallel manipulators, Control of constrained manipulators, Cartesian control, Force control and hybrid position/force control, Advanced topics in non-linear control of manipulators.	
8	**Module 8: Modeling and control of flexible robots**	4
	Models of flexible links and joints, Kinematic modeling of multi-link flexible robots, Dynamics and control of flexible link manipulators, Numerical simulations results, Experiments with a planar two-link flexible manipulator.	
9	**Module 9: Modeling and analysis of wheeled mobile robots**	3
	Introduction and some well known wheeled mobile robots (WMR), two and three-wheeled WMR on flat surfaces, Slip and its modeling, WMR on uneven terrain, Design of slip-free motion on uneven terrain, Kinematics, dynamics and static stability of a three-wheeled WMR's on uneven terrain, Simulations using Matlab and ADAMS.	
10	**Module 10: Selected advanced topics in robotics**	3
	Introduction to chaos, Non-linear dynamics and chaos in robot equations, Simulations of planar 2 DOF manipulators, Analytical criterion for unforced motion. Gough-Stewart platform and its singularities, use of near singularity for fine motion for sensing, design of Gough-Stewart platform based sensors. Over-constrained mechanisms and deployable structures, Algorithm to obtain redundant links and joints, Kinematics and statics of deployable structures with pantographs or scissor-like elements (SLE's).	

Reference Books:

Practical

Design Lab
CS891
Contracts: 6
Credits- 4

The Spoken tutorials are designed by IIT-Bombay and promoted by MHRD, GoI, to make the students industry ready. These tutorials can be organised in Colleges and promoted among students. The tutorials followed by practice will enable the students to handle problems. After 2-3 weeks of practice there is a scope for evaluation and certification.

Please visit the website for details. http://www.spoken-tutorial.org

Any three topics from the following may be can be chosen:

1. C and C++ ; Basic and Intermediate Levels

2. Advanced C++

3. Java and Netbeans

4. Java Business Application

5. PHP & MySQL

6. Python

7. Scilab

8. Linux and Ubuntu

Syllabus for B.Tech(Electronics & Communication Engineering) Up to Fourth

ECE SECOND YEAR: THIRD SEMESTER

A. THEORY							
Sl.No.	**Field**	**Theory**	**Contact Hours/Week**				**Cr. Points**
			L	**T**	**P**	**Total**	
1	**M(CS)301**	Numerical Methods	2	1	0	3	2
2	**M302**	Mathematics-III	3	1	0	4	4
3	**EC301**	1. Circuit Theory & Networks	3	1	0	4	4
4	**EC302**	2. Solid State Device	3	0	0	3	3
5	**EC303**	1. Signals & Systems	3	0	0	3	3
	EC304	2. Analog Electronic Circuits	3	1	0	4	4
6							
Total of Theory						**21**	**20**
B. PRACTICAL							
7	**M(CS)391**	Nunerical Lab	0	0	2	2	1
8	**EC391**	Circuit Theory & Network Lab	0	0	3	3	2
9	**EC392**	Solid State Devices	0	0	3	3	2
10	**EC393**	1. Signal System Lab	0	0	3	3	2
11	**EC394**	2. Analog Electronic Circuits Lab	0	0	3	3	2
Total of Practical						**14**	**9**
Total of Semester						**35**	**29**

ECE SECOND YEAR: FOURTH SEMESTER

A. THEORY							
Sl.No.	**Field**	**Theory**	**Contact Hours/Week**				**Cr. Points**
			L	**T**	**P**	**Total**	
1	**HU401**	Values & Ethics in Profession	3	0	0	3	3
2	**PH401**	Physics-II	3	1	0	4	4
3	**CH401**	Basic Environmental Engineering & Elementary Biology	2+1	0	0	3	3
4	**EC401**	1. EM Theory & Transmission Lines	3	1	0	4	4
5	**EC402**	2. Digital Electronic & Intrgrated Circuits	3	1	0	4	4
Total of Theory						**18**	**18**
B. PRACTICAL							
6	**HU481**	Technical Report Writing & Language Lab Practice	0	0	3	3	2
7	**PH491**	Physics-II Lab	0	0	3	3	2
8	**EC491**	1. EM Theory & Tx Lines Lab	0	0	3	3	2
9	**EC492**	2. Digital Electronic & Integrated Circuits Lab	0	0	3	3	2
Total of Practical						**12**	**8**
Total of Semester						**30**	**26**

Syllabus for B.Tech(Electronics & Communication Engineering) Up to Fourth

Third Year - Fifth Semester

A. THEORY							
Sl.No	Paper Code	Theory	Contact Hours/Week				Cr. Pts
			L	T	P	Total	
1	HU-501	Economics for Engineers	3	0	0	3	3
2	EC-501	Analog Communication	3	1	0	4	4
3	EC-502	Microprocessors & Microcontrollers	3	1	0	4	4
4	EC-503	Control System	3	0	0	3	3
5	F. E.- EC 504A EC-504B	Computer Architecture Data structure & C	3	1	0	4	3/4
Total of Theory						18	18
B. PRACTICAL							
6	EC-591	Analog Communication*	0	0	3	3	2
7	EC-592	Microprocessors & Microcontrollers*	0	0	3	3	2
8	EC -593	Control System*	0	0	3	3	2
9	F.E. EC-594A EC-594B	 Computer Architecture Data structure & C	0	0	3	3	2
Total of Practical						12	8
Total of Semester						30	26

Laboratories to have both physical experiments and simulation. Only virtual laboratory is not accepted

Third Year - Sixth Semester

A. THEORY							
Sl.No.	Field	Theory	Contact Hours/Week				Cr. Pts
			L	T	P	Total	
1	HU-601	Principles of Management	2	0	0	2	2
2	EC601	Digital Communications	3	0	0	3	3
3	EC602	Digital Signal Processing	3	0	0	3	3
4	EC 603	Telecommunication System	3	0	0	3	3
5	(No Lab) EC-604A EC-604B	 Antenna Theory & Propagation Information Theory & Coding	3	0	0	3	3
6	(With Lab) EC-605A EC-605B EC-605C	Object Oriented Programming (IT) Programming Language (CSE) Electronic Measurement & Instrumentation(EI)	3	0	0	3	3
Total of Theory						17	17
B. PRACTICAL							
8	EC691	Digital Communications	0	0	3	3	2
9	EC 692	Digital Signal Processing	0	0	3	3	2
10	F.E. EC-695A EC-695B EC-695C	Object Oriented Programming (IT) Programming Lanuage (CSE) Electronic Measurement & Instrumentation	0	0	3	3	2
11	EC-681	Seminar	0	0	3	3	2
Total of Practical						12	8
Total of Semester						29	25

Proposed

Fourth Year - Seventh Semester

A. THEORY

Sl. No.	Field	Theory Name of Paper	Contact Hours/Week L	T	P	Total	Cr. Pts
1	**EC701**	Wireless Communication & N/W	3	0	0	3	3
2	**EC702**	Microelectronics & VLSI Designs	3	0	0	3	3
3	**EC703** (With Lab)	A. RF & Microwave Engg. B. Optical Communication & N/W C. Computer Networks D. FPGA & Reconfigurable Computing	3	0	0	3	3
4	**EC704** (No Lab)	A. Radar Engg B. Embedded Systems C. Biomedical Instrumentation	3	0	0	3	3
5	**F. E. EC705**	A. Artificial Intelligence (CSE) B. Robotics (CSE) C. Data Base Management System D. Power Electronics	3	0	0	3	3
		Total of Theory				**15**	**15**

B. PRACTICAL

		Name of Paper					
6	**HU781**	Group Discussion	0	0	3	3	2
7	**EC792**	VLSI Design Lab	0	0	3	3	2
8	**EC793**	A. RF & Microwave Engg. Lab B. Optical Communication & N/W Lab C. Computer Networks Lab D. FPGA & Reconfigurable Computing lab	0	0	3	3	2
9	**F.E EC795**	A.Artificial Intelligence Lab(CSE) B.Robotics lab(CSE) C.Data Base Management System Lab (CSE) D.Power Electronics Lab(EE)	0	0	3	3	2
10	**EC781**	**Industrial training**	**4 wks during 6th -7 th Sem-break**				2
11	**EC782**	**Project part 1**				3	2
		Total of Practical				**15**	**12**
		Total of Semester				**30**	**27**

Fourth Year - Eighth Semester

A. THEORY

Sl. No.	Field	Theory Paper Name	Contact Hours/Week L	T	P	Total	Cr. Pts
1	**HU801A**	Organisational Behaviour	2	0	0	2	2
3	**EC801** (No Lab)	A. Smart Antenna B. Digital Image Processing C. Satellite Communication & Remote Sensing	3	0	0	3	3
	EC802 (No Lab)	A. Neural N/W & Applications (CSE) B. Material Sc. & Engg (Mat. Sc) C. Renewable Energy (EE) D. Audio & Speech Processing (CSE)	3	0	0	3	3
		Total of Theory				**8**	**8**

B. PRACTICAL

	EC881	Design Lab / Industrial problem related practical training	0	0	6	6	4
	EC882	Project part-2	0	0	12	12	6
	EC893	Grand viva					3
		Total of Practical				**18**	**13**
		Total of Semester				**26**	**21**

SEMESTER - III

Theory

NUMERICAL METHODS
Code : M(CS) 301
Contacts : 2L+1T
Credits :2

Approximation in numerical computation: Truncation and rounding errors, Fixed and floating-point arithmetic, Propagation of errors. (4)

Interpolation: Newton forward/backward interpolation, Lagrange's and Newton's divided difference Interpolation. (5)

Numerical integration: Trapezoidal rule, Simpson's 1/3 rule, Expression for corresponding error terms. (3)

Numerical solution of a system of linear equations:
Gauss elimination method, Matrix inversion, LU Factorization method, Gauss-Seidel iterative method. (6)

Numerical solution of Algebraic equation:
Bisection method, Regula-Falsi method, Newton-Raphson method.

(4)

Numerical solution of ordinary differential equation: Euler's method, Runge-Kutta methods, Predictor-Corrector methods and Finite Difference method. (6)

Text Books:

1. C.Xavier: C Language and Numerical Methods.
2. Dutta & Jana: Introductory Numerical Analysis.
3. J.B.Scarborough: Numerical Mathematical Analysis.
4. Jain, Iyengar , & Jain: Numerical Methods (Problems and Solution).

References:

1. Balagurusamy: Numerical Methods, Scitech.
2. Baburam: Numerical Methods, Pearson Education.
3. N. Dutta: Computer Programming & Numerical Analysis, Universities Press.
4. Soumen Guha & Rajesh Srivastava: Numerical Methods, OUP.
5. Srimanta Pal: Numerical Methods, OUP.

MATHEMATICS

Code: M 302

Contacts: 3L +1T = 4

Credits: 4

Note 1: The entire syllabus has been divided into four modules. Note 2: Structure of Question Paper

There will be two groups in the paper:
Group A: Ten questions, each of 2 marks, are to be answered out of a total of 15 questions, covering the entire syllabus. Group B: Five questions, each carrying 10 marks, are to be answered out of (at least) 8 questions.
Students should answer at least one question from each module. [At least 2 questions should be set from each of Modules II & IV.
At least 1 question should be set from each of Modules I & III. Sufficient questions should be set covering the whole syllabus for alternatives.]

Module I: Fourier Series & Fourier Transform [8L]
Topic: Fourier Series:
Sub-Topics: Introduction, Periodic functions: Properties, Even & Odd functions: Properties, Special wave forms: Square wave, Half wave Rectifier, Full wave Rectifier, Saw-toothed wave, Triangular wave. (1)
Euler's Formulae for Fourier Series, Fourier Series for functions of period 2π, Fourier Series for functions of period $2l$, Dirichlet's conditions, Sum of Fourier series. Examples. (1)
Theorem for the convergence of Fourier Series (statement only). Fourier Series of a function with its periodic extension. Half Range Fourier Series: Construction of Half range Sine Series, Construction of Half range Cosine Series. Parseval's identity (statement only). Examples. (2)

Topic: Fourier Transform:
Sub-Topics: Fourier Integral Theorem (statement only), Fourier Transform of a function, Fourier Sine and Cosine Integral Theorem (statement only), Fourier Cosine & Sine Transforms.
Fourier, Fourier Cosine & Sine Transforms of elementary functions. (1)

Properties of Fourier Transform: Linearity, Shifting, Change of scale, Modulation. Examples. Fourier

Transform of Derivatives. Examples. (1)

Convolution Theorem (statement only), Inverse of Fourier Transform. Examples. (2)

Module II : Calculus of Complex Variable [13L]

Topic: Introduction to Functions of a Complex Variable.

Sub-Topics: Complex functions, Concept of Limit, Continuity and Differentiability. (1)

Analytic functions, Cauchy-Riemann Equations (statement only). Sufficient condition for a function to be analytic. Harmonic function and Conjugate Harmonic function, related problems. (1)

Construction of Analytic functions: Milne Thomson method, related problems**.** (1)

Topic: Complex Integration.

Sub-Topics: Concept of simple curve, closed curve, smooth curve & contour. Some elementary properties of complex Integrals. Line integrals along a piecewise smooth curve. Examples. (2)

Cauchy's theorem (statement only). Cauchy-Goursat theorem (statement only). Examples. (1)

Cauchy's integral formula, Cauchy's integral formula for the derivative of an analytic function, Cauchy's integral formula for the successive derivatives of an analytic function. Examples. (2)

Taylor's series, Laurent's series. Examples (1)

Topic: Zeros and Singularities of an Analytic Function & Residue Theorem.

Sub-Topics: Zero of an Analytic function, order of zero, Singularities of an analytic function. Isolated and non-isolated singularity, essential singularities. Poles: simple pole, pole of order m.
Examples on determination of singularities and their nature. (1)

Residue, Cauchy's Residue theorem (statement only), problems on finding the residue of a given function, evaluation of definite integrals:

$\int_0^{\infty} \frac{\sin x}{x}\,dx$, $\int_0^{2\pi} \frac{d\theta}{a + b\cos\theta + c\sin\theta}$, $\square\int_C \frac{P(z)}{Q(z)}\,dz$ (elementary cases, P(z) & Q(z) are polynomials of 2nd order or less).

(2)

Topic: Introduction to Conformal Mapping.

Sub-Topics: Concept of transformation from z-plane to w-plane. Concept of Conformal Mapping. Idea of some standard transformations. Bilinear Transformation and determination of its fixed point. (1)

Module III: Probability [8L] Topic:
Basic Probability Theory
Sub-Topics: Classical definition and its limitations. Axiomatic definition.
Some elementary deduction: i) P(O)=0, ii) 0≤P(A)≤1, iii) P(A')=1−P(A) etc. where the symbols have their usual meanings. Frequency interpretation of probability. (1)

Addition rule for 2 events (proof) & its extension to more than 2 events (statement only). Related problems.
Conditional probability & Independent events. Extension to more than 2 events (pairwise & mutual independence). Multiplication Rule. Examples. Baye's theorem (statement only) and related problems. (3)

Topic: Random Variable & Probability Distributions. Expectation.
Sub-Topics: Definition of random variable. Continuous and discrete random variables. Probability density function & probability mass function for single variable only. Distribution function and its properties (without proof). Examples. Definitions of Expectation & Variance, properties & examples. (2)

Some important discrete distributions: Binomial & Poisson distributions and related problems.
Some important continuous distributions: Uniform, Exponential, Normal distributions and related problems. Determination of Mean & Variance for Binomial, Poisson & Uniform distributions only.
(2)

Module IV: Partial Differential Equation (PDE) and Series solution of Ordinary Differential Equation (ODE) [13L]

Topic: Basic concepts of PDE.
Sub-Topics: Origin of PDE, its order and degree, concept of solution in PDE. Introduction to different methods of solution: Separation of variables,

Laplace & Fourier transform methods. (1)

Topic: Solution of Initial Value & Boundary Value PDE's by Separation of variables, Laplace & Fourier transform methods.

Sub-Topics:

PDE I: One dimensional Wave equation. (2)

PDE II: One dimensional Heat equation. (2)
PDE III: Two dimensional Laplace equation. (2)

Topic: Introduction to series solution of ODE.

Sub-Topics: Validity of the series solution of an ordinary differential equation. General method to solve $P_0 y''+P_1 y'+P_2 y=0$ and related problems. (2)

Topic: Bessel's equation.

Sub-Topics: Series solution, Bessel function, recurrence relations of Bessel's Function of first kind. (2)

Topic: Legendre's equation.

Sub-Topics: Series solution, Legendre function, recurrence relations and orthogonality relation. (2)

TOTAL LECTURES : 42

Text Books:

1. Brown J.W and Churchill R.V: Complex Variables and Applications, McGraw-Hill.
2. Das N.G.: Statistical Methods, TMH.
3. Grewal B S: Higher Engineering Mathematics, Khanna Publishers.
4. James G.: Advanced Modern Engineering Mathematics, Pearson Education.
5. Lipschutz S., and Lipson M.L.: Probability (Schaum's Outline Series), TMH.

References:

1. Bhamra K. S.: Partial Differential Equations: An introductory treatment with applications, PHI
2. Dutta Debashis: Textbook of Engineering Mathematics, New Age International Publishers.
3. Kreyzig E.: Advanced Engineering Mathematics, John Wiley and Sons.
4. Potter M.C, Goldberg J.L and Aboufadel E.F.: Advanced Engineering Mathematics, OUP.
5. Ramana B.V.: Higher Engineering Mathematics, TMH.
6. Spiegel M.R. , Lipschutz S., John J.S., and Spellman D., : Complex Variables, TMH.

CIRCUIT THEORY & NETWORKS

Code : EC 301 **Contacts : 3L +1T =4hrs** **Credits :4**

Module	Content	Hrs
1.	**a)** ***Resonant Circuits***: Series and Parallel resonance [1L], (*) ***Impedance and Admittance Characteristics, Quality Factor, Half Power Points, Bandwidth [2L], Phasor diagrams, Transform diagrams [1L], Practical resonant and series circuits, Solution of Problems [Tutorial - 1L]***. **b) Mesh Current Network Analysis**: Kirchoff's Voltage law, Formulation of mesh equations [1L], Solution of mesh equations by Cramer's rule and matrix method [2L], Driving point impedance, Transfer impedance [1L], Solution of problems with DC and AC sources [1L].	4 6
2.	**a) Node Voltage Network Analysis**: Kirchoff's Current law, Formulation of Node equations and solutions [2L], driving point admittance, transfer Admittance [1L], Solution of problems with DC and AC sources [1L]. **b) Network Theorems**: Definition and Implication of Superposition Theorem [1L], Thevenin's theorem, Norton's theorem [1L], Reciprocity theorem, Compensation theorem [1L], maximum Power Transfer theorem [1L], Millman's theorem, Star delta transformations [1L], Solutions and problems with DC and AC sources [1L].	4 6
3.	***Graph of Network***: Concept of Tree and Branch [1L], tree link, junctions, ***(*) Incident matrix, Tie set matrix [2L], Determination of loop current and node voltages [2L]***. **Coupled Circuits**: Magnetic coupling, polarity of coils, polarity of induced voltage, concept of Self and mutual inductance, Coefficient of coupling, Solution of Problems. **Circuit transients**: DC transients in R-L and R-C Circuits with and without initial charge, ***(*) R-L-C Circuits, AC Transients in sinusoidal R-L, R-C and R-L-C Circuits, Solution of Problems [2L].***	4 4 2
4.	**Laplace transform**: Concept of Complex frequency [1L], transform of f(t) into F(s) [1L], transform of step, exponential, over damped surge, critically damped surge, damped and un-damped sine functions [2L], properties of Laplace transform [1L], linearity, real differentiation, real integration, initial value theorem and final value theorem [1L], inverse Laplace transform [1L], application in circuit analysis, Partial fraction expansion, Heaviside's expansion theorem, Solution of problems [1L]. ***(*) Laplace transform and Inverse Laplace transform [2L]***. **Two Port Networks**: Relationship of Two port network variables, short circuit admittance parameters, open circuit impedance parameters, transmission parameters, relationship between parameter sets, network functions for ladder network and general network.	8 4

Old module 9 viz. SPICE deleted for consideration in Sessional Subject.

Problems for Module 1a:

Ex. 1. A parallel RLC Circuit has R= 100 K Ohms, L= 10 mH, C= 10 nF. Find resonant frequency, bandwidth and Quality factor.

Ex. 2. Two coils one of R= 0.51 Ohms,L= 32 mH, other of R= 1.3 Ohms, L= 15 mH, and two capacitors of 25 micro F and 62 micro F are in series with a resistance of 0.24 Ohms. Determine resonance frequency and Q of each coil.

Ex. 3. In a series circuit with R= 50 Ohms, l= 0.05 Ohms and C= 20 micro F, frequency of the source is varied till the voltage across the capacitor is maximum. If the applied voltage is 100 V, find the maximum voltage across the capacitor and the frequency at which this occurs. Repeat the problem with R= 10 Ohms.

Problems for Module 1b and 2:

Examples for mesh current in networks like T, π, bridged T and combination of T and π.

See Annexure-1 for the figures

Problems for Module- 2a:

Ex.1. The network of Fig.1 – Mod.4 is in the zero state until t= 0when switch is closed. Find the current i1(t) in the resistor R3. Hints: the Fig.1 – Mod.4 shows the same network in terms of transform impedance with the Thevenin equivalent network.

.

Ex.2. Find the Norton's equivalent circuit for the circuit Fig.2 – Mod.4.
Hints: As a 1st. step, short the terminals ab. This results in the Circuit of Fig.2.(a). By applying KCL at node a, we have,
(0-24)/4+ isc = 0; i.e isc= 9 A. To find out the equivalent Norton's impedance RN, deactivate all the independent sources, resulting in a circuit of Fig.2.(b), RN= (4x12)/(4+12) = 3 Ohms. Thus we obtain Norton equivalent circuit of Fig.2 (c).

Problems for Module – 2b:

Ex.1. Draw the graph, one tree and its co tree for the circuit shown in Fig.1 – mod.5.
Hints: In the circuit there are four nodes (N= 4) and seven branches (B= 7). The graph is so drawn and appears as in Fig. 1 (a). Fig.1(b) shows one tree of graph shown in Fig. 1(a). The tree is made up of branches 2, 5 and 6. The co tree for the tree of Fig.1 (b) is shown in Fig. 1(c). The co tree has L= B-N+1 = 7-4+1 = 4 Links.

Ex.2. (a). For the circuit shown in Fig.2- Mod.5, construct a tree so that i1 is a link current. Assign a complete set of link currents and find i1 (t).
(b). Construct another tree in which v1 is a tree branch voltage. Assign a complete set of tree branch voltages and v1 (t). Take
i(t) = 25 sin 1000t A, v(t)= 15 cos 1000t.

Tutorials: (*):Bold and Italics. Text

Books:

1. Valkenburg M. E. Van, "Network Analysis", Prentice Hall./Pearson Education

2. Hayt "Engg Circuit Analysis" 6/e Tata McGraw-Hill

3. D.A.Bell- Electrical Circuits- Oxford

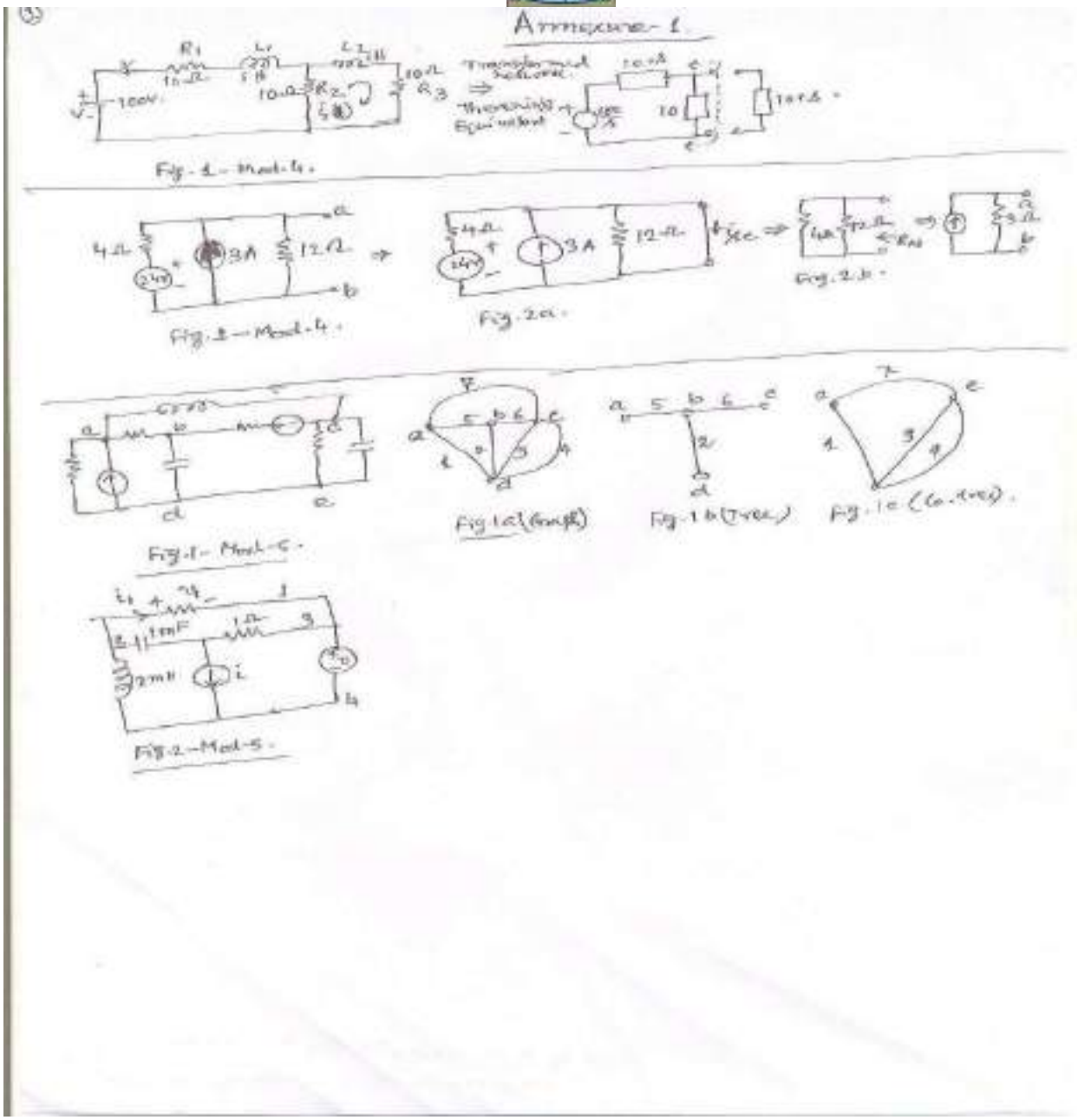

Reference Books:

1. A.B.Carlson-Circuits- Cenage Learning

2. John Bird- Electrical Circuit Theory and Technology- 3/e- Elsevier (Indian Reprint)

3. Skilling H.H.: “Electrical Engineering Circuits”, John Wiley & Sons.

4. Edminister J.A.: “Theory & Problems of Electric Circuits”, McGraw-Hill Co.

5. Kuo F. F., “Network Analysis & Synthesis”, John Wiley & Sons.

6. R.A.DeCarlo & P.M.Lin- Linear Circuit Analysis- Oxford

7. P.Ramesh Babu- Electrical Circuit Analysis- Scitech

8. Sudhakar: “Circuits & Networks:Analysis & Synthesis” 2/e TMH

9. M.S.Sukhija & T.K.NagSarkar- Circuits and Networks-Oxford

10. Sivandam- “Electric Circuits and Analysis”, Vikas

11. V.K. Chandna, “A Text Book of Network Theory & Circuit Analysis”,Cyber Tech

12. Reza F. M. and Seely S., “Modern Network Analysis”, Mc.Graw Hill .

13. M. H. Rashid: “Introduction to PSpice using OrCAD for circuits and electronics”, Pearson/PHI

14. Roy Choudhury D., “Networks and Systems”, New Age International Publishers.

15. D.Chattopadhyay and P.C.Rakshit: “Electrical Circuits” New Age

SOLID STATE DEVICES

Code : EC 302 **Contacts : 3L +9T =3hrs** **Credits :3**

Module - 1: Energy Bands and Charge Carriers in Semiconductors- Energy-band (E-k) diagram, effective mass, wave vector, Debye length, Direct & indirect band-gap semiconductors; Carrier distribution, Fermi-level, Intrinsic & Extrinsic semiconductors, Non-equilibrium in carrier distribution; drift, diffusion, scattering; Piezo & Hall effects. **[8]**
Details: [Recapitulation of Conductor, Insulator & Semiconductor with special emphasis on the concept of energy bands and band-gaps, E-k diagrams for direct and indirect band-gap semiconductors ***(1L)***];
Concept of the effective mass & crystal momentum, concept of wave-vector 'k'; Intrinsic & extrinsic semiconductors, idea about degeneracy and non-degeneracy. ***(2L)***
Carrier concentration in terms of bulk Density of states and Fermi-Dirac distribution (no derivation, expression and significance only); Concept of Fermi level, F.L. shift with doping & temperature; ***(2L)***
Non-equilibrium condition: Drift & diffusion of carriers with simple expressions; Hall effect & Piezo-electric effect, Carrier scattering (basic idea only). Generation and re-combination, quasi-Fermi energy level (concept only) ***(3L)***

Module - 2: Rectifier and detector diodes: P-N junction & Schottky junction physics, I-V relation, Junction capacitances, Diode switching, Optical devices & Solar cells, Tunnel diode. **[10]**
Details: Homo- and Hetero-junctions – examples of semiconductor-semiconductor junction (Homo) & Metal-metal, Metal-S.C. junctions (Hetero-) ***(1L);***
[Recapitulation of the rectifying properties of these two types of junctions***;***] Homo-junction – Semiconductor-semiconductor p-n junction & rectification (recapitulation) ***(1L);*** Plot of junction voltage, field and depletion charge with distance by solving simple 1D Poisson's Equation (Gradual Channel & Depletion Approximations) ***(1L);*** Schottky contact & Schottky diode ***(1L);*** Junction capacitances in p-n diodes (recapitulation) and their expressions; Application of Diode capacitance in Varactor Diodes ***(1L);*** Derivation for Forward and Reverse current, piece-wise linear diode- characteristics, concept of Diode resistance & Differential diode resistance, ***(1L)***; Diode switching & diode switch, properties of rectifier and switching diodes ***(1L);*** Importance of reverse current in optical detectors, photo-diodes, solar cells ***(1L);*** Spontaneous emission & Stimulated emission - optical devices (basic idea only) ***(1L).***], Tunnel diode -(basic principle only - importance of negative resistance) ***(1L).***

Module - 3: Bipolar Junction Transistors*:* Physical mechanism, current gain, minority current distribution; Punch-through and avalanche effect; High voltage and high power transistors; Frequency limitations, high frequency transistors, Power transistors. **[8]**
Details: [Emphasis on BJT as a current controlled device, amplification property of BJT ***(1L);*** I-V characteristics (input & output) with derivation, input & output characteristics for CB. CE & CC mode, current amplification factors α for CB mode and β for CE mode ***(2L)***; Eber's Moll model for Static behaviour & Charge controlled model (without derivation) for dynamic behaviour, equivalent circuits. ***(2L)***; Basic idea about Photo-transistors & Power transistors (only their features Vis-à-vis the ordinary transistors) ***(1L);*** PNPN transistors - simple working principle, I-V characteristics, triggering, mention of Triacs, Diacs & Thyristors. ***(2L)***]

Module - 4: Field Effect Transistors: JFETS, IJFETS and MOSFETs; MOS-capacitors, flat band and threshold voltages; P and N-channel MOSFETS, CMOS and VLSI MOSFETS, Semiconductor sensors and detectors. **[9]**
Details: [Concept of Field effect device (recapitulation), channel modulation & channel isolation ***(1L)***;] JFET - behaviour, characteristics ***(1L)***; MOSFET - channel inversion, Ideal Threshold voltage ***(1L),*** MOS capacitances, depletion width, surface field and potential (by solving Poisson's equation with gradual channel & depletion approximations) ***(2L);*** Real MOSFET & Threshold voltage for real MOSFET, ***(1L)***; I-V characteristics with expressions for saturation and non-saturation regions (concepts but no detail derivations, empirical relations to be used for solving problems) ***(1L)***; Equivalent circuit for MOSFET ***(1L)***; MOSFET for VLSI - scaling issues (basic concept of Short Channel Effects only) ***(1L)***;]

Text Books :

Neamen- Semiconductor Physics and Devices TMH Bhattacharya &
Sharma- Solid State Electronic Devices- Oxford Maini & Agrawal-
Electronics Devices and Circuits- Wiley

Reference Books :

Milman, Halkias & Jit- Electronics Devices and Circuits- TMH
Bell-Electronics Devices and Circuits-Oxford
Bhattacharya & Sharma- Solid State Electronic Devices- Oxford Singh
& Singh- Electronics Devices and Integrated Circuits –PHI Bogart,
Bisley & Rice- Electronics Devices and Circuits- Pearson Kasap-
Principles of Electronic Materials and Devices- TMH
Boylestad & Nashelsky- Electronics Devices and Circuit Theory- Pearson

Salivahanan, Kumar & Vallavaraj- Electronics Devices and Circuits- TMH

Learning Outcome:

Module - 1: Student gains the ability to ***identify semiconductors*** which are elemental or compound type; Direct and indirect band-gap type so that

they may be used in optical and non-optical devices; this empowers the student ***to explain the importance of Fermi level*** in identifying intrinsic and extrinsic n- and p-type semiconductors, to predict how Fermi-level changes with doping; ***identify degenerate and non-degenerate*** semiconductors; indicate the ***effect of temperature on carrier concentration***.

Module - 2: Focus is on understanding the junction phenomena including alignment of Fermi-level at the interface of a p-n junction and Schottky junction, and its non-alignment due to the application of junction potential. The student will be able to ***draw the I-V characteristics***; acquire the ability ***to evaluate the dependence*** of ***reverse saturation (drift) current on minority carrier concentration and forward diffusion component on potential barrier***; the student will ***calculate the junction capacitances*** and ***compare the switching capability*** of the minority carrier p-n diode with the majority carrier based Schottky diode; to highlight the importance of peak-inverse voltage for a diode and compare the peak inverse voltages of Si and Ge diodes.

Practical ability: Diode specification; Diode numbers and lead specification; Drawing diode characteristics and calculation of differential resistance; load-line analysis of simple diode circuits. [To be practiced in the laboratory]

Module - 3: The student will appreciate the importance of varying the reverse saturation current across the reverse biased base-collector junction by varying the minority carrier concentration using electrical means i.e. forward biased emitter-base junction; acquire the ability ***to treat the BJT as a two port device*** and ***explain transistor action*** for output current control by changing input current; The student will be able ***to use CE, CB and CC modes*** for different applications and ***design biasing circuits*** with BJTs.

Practical ability [For Laboratory Practice]: Transistor lead testing and transistor testing; Transistor biasing for different classes of amplifiers; [To be practiced in the laboratory]

Module - 4: Ability ***to calculate the threshold voltages*** for different MOSFETs; ability to ***compute the effect of Gate voltages on the junction capacitances***; ability ***to bias MOSFETs and JFETs***.

Practical ability [For Laboratory Practice]: JFET and MOSFET specifications; Biasing of FETs. [To be practiced in the laboratory]

SIGNALS AND SYSTEMS

Code : EC 303 **Contacts : 3L +0T =3hrs** **Credits :3**

Pre requisite: First year courses (semester I & II) covering

(1) Concepts in electrical and electronics circuits (Basic Electrical and Electronics Engg I & II).

(2) Knowledge in algebra and calculus with problem solving capability (studied in Mathematics-I).

(3) Fundamental concepts on Laplace Transformation (studied in Mathematics-II) (4)

Genesis: The scope of this paper is to introduce a panoramic view of signals & systems so that the students may understand the basic concepts of various systems and signal processing and the way the signals interact with the physical systems. This understanding is not only the prerequisite to study the subject DSP (to be introduced in the higher semester), but also crucial for understanding fundamental concepts in communication engineering in general and to some extent for other upcoming subjects such as control engineering and circuit analysis/ synthesis.

Outcome: The course will enable the students to study the various tools of signal analysis and acquire confidence in studying all other communication related subjects (in particular DSP) in the subsequent semesters.

Module No	Topic	Hrs
3.	**Introduction to signal and systems**: Continuous and discrete time signals: Classification of Signals – Periodic aperiodic even – odd – energy and power signals – Deterministic and random signals – complex exponential and sinusoidal signals – periodicity –unit impulse – unit step – Transformation of independent variable of signals: time scaling, time shifting. System properties: Linearity, Causality, time invariance and stability. Dirichlet's conditions, Determination of Fourier series coefficients of signal.	**8**
4.	**Signal Transformation**: Fourier transformation of continuous and discrete time signals and their properties. Laplace transformation- analysis with examples and properties. Parseval's theorem; Convolution in time (both discrete and continuous) and frequency domains with magnitude and phase response of LTI systems.	**8**
5.	**Laplace Transform:** Recapitulation, Analysis and characterization of LTI systems using Laplace transform: Computation of impulse response and transfer function using Laplace transform.	**2**
6.	**Sampling Theorem**: Representation of continuous time signals by its sample –Types of sampling, Sampling theorem. Reconstruction of a Signal from its samples, aliasing –sampling of band pass signals.	**4**
7.	**Z-Transforms:** Basic principles of z-transform - z-transform definition –, Relationship between z-transform and Fourier transform, region of convergence – properties of ROC – Properties of z-transform – Poles and Zeros – inverse z-transform using Contour integration - Residue Theorem, Power Series expansion and Partial fraction expansion	**6**
8.	**Random Signals & Systems:** Definitions, distribution & density functions, mean values & moments, function of two random variables, concepts of correlation, random processes, spectral densities, response of LTI systems to random inputs.	**4**
		Total: 32 hrs

Text Books:

3. A.V.Oppenheim, A.S.Willsky and S.H.Nawab -Signals & Systems, Pearson
4. S.Haykin & B.V.Veen, Signals and Systems- John Wiley
5. A.Nagoor Kani- Signals and Systems- McGraw Hill

References:

1. J.G.Proakis & D.G.Manolakis- Digital Signal Processing Principles, Algorithms and Applications, PHI.
2. C-T Chen- Signals and Systems- Oxford
3. E WKamen &BS Heck- Fundamentals of Signals and Systems Using the Web and Matlab- Pearson
4. B.P.Lathi- Signal Processing & Linear Systems- Oxford
5. P.Ramesh Babu & R.Anandanatarajan- Signals and Systems 4/e- Scitech
6. M.J.Roberts, Signals and Systems Analysis using Transform method and MATLAB, TMH
7. S Ghosh- Signals and Systems- Pearson
8. M.H.Hays- Digital Signal Processing ", Schaum's outlines, TMH
9. Ashok Ambardar, -Analog and Digital Signal Processing- Thomson.
10. Phillip, Parr & Riskin- Signal, Systems and Transforms- Pearson

ANALOG ELECTRONIC CIRCUITS

Code : EC 304 **Contacts : 3L +1T =4hrs** **Credits :4**

Module-1: [10]

a) Filters and Regulators: Capacitor filter, π-section filter, ripple factor, series and shunt voltage regulator, percentage regulation, 78xx and 79xx series, concept of SMPS. [4]

b) Transistor Biasing and Stability: Q-point, Self Bias-CE, Compensation techniques, h-model of transistors. Expression for voltage gain, current gain, input and output impedance, trans-resistance & trans-conductance; Emitter follower circuits, High frequency model of transistors. [6]

Module -2: [10]

1. Transistor Amplifiers: RC coupled amplifier, functions of all components, equivalent circuit, derivation of voltage gain, current gain, input impedance and output impedance, frequency response characteristics, lower and upper half frequencies, bandwidth, and concept of wide band amplifier. [6]
2. Feedback Amplifiers & Oscillators: Feedback concept, negative & positive feedback, voltage/ current, series/shunt feedback, Berkhausen criterion, Colpitts, Hartley's, Phase shift, Wein bridge and crystal oscillators. [4]

Module -3: [10]

1. Operational Amplifier: Ideal OPAMP, Differential Amplifier, Constant current source (current mirror etc.), level shifter, CMRR, Open & Closed loop circuits, importance of feedback loop (positive & negative), inverting & non- inverting amplifiers, voltage follower/buffer circuit. [6]
2. Applications of Operational Amplifiers: adder, integrator & differentiator, comparator, Schmitt Trigger. Instrumentation Amplifier, Log & Anti-log amplifiers, Trans-conductance multiplier, Precision Rectifier, voltage to current and current to voltage converter, free running oscillator. [6]

Module -4: [8]

1. Power amplifiers – Class A, B, AB, C, Conversion efficiency, Tuned amplifier [4]
2. Multivibrator – Monostable, Bistable, Astable multivibrators; Monostable and astable operation using 555 timer. [2]
3. Special Functional Circuits: VCO and PLL. [2]

Total: 40 hrs

Text Books:

1. Sedra & Smith-Microelectronic Circuits- Oxford UP
2. Franco—Design with Operational Amplifiers & Analog Integrated Circuits , 3/e, McGraw Hill
3. Boylested & Nashelsky- Electronic Devices and Circuit Theory- Pearson/PHI

Reference Books:

1. Millman & Halkias – Integrated El;ectronics, McGraw Hill.
2. Rashid-Microelectronic Circuits-Analysis and Design- Thomson (Cenage Learning)
3. Schilling & Belove—Electronic Circuit:Discrete & Integrated , 3/e , McGraw Hill
4. Razavi- Fundamentals of Microelectronic s- Wiley
5. Malvino—Electronic Principles , 6/e , McGraw Hill
6. Horowitz & Hill- The Art of Electronics; Cambridge University Press.
7. Bell- Operational Amplifiers and Linear ICs- Oxford UP
8. Tobey & Grame – Operational Amplifier: Design and Applications, Mc GrawHill.

9. Gayakwad R.A -- OpAmps and Linear IC’s, PHI

10. Coughlin and Driscol – Operational Amplifier and Linear Integrated Circuits – Pearson Education

Tutorial Guidance:

Prerequisite: Basic knowledge about components R,L,C, Network Theorems(Kirchoffs law, Thevenin's theorem, Miller theorem etc.). Basic knowledge about the operation of semiconductor devices (Transistor, Diode, UJT, SCR etc.),Ohms Law, Voltage current equations. Basic knowledge of Differentiation , Integration, Differential equation, matrix etc.

Basic level of understanding: Current Voltage equation. Direction of current flow. Device limitations, Power consumptions and their limits, usage of appropriate device in the problem. Device selection and comparison, advantages and disadvantages.

Outcome of learning: Students will be able to design, test and examine simple circuits with transistor, op-amp, amplifiers, oscillators etc. They will be able to test, repair, modify and take-up design exercise. They will have clear knowledge of basic circuit analysis and its functions and their limitations. Most importantly they will be able to recognize, understand, modify and repair majority of circuits used in professional equipment design.

Module:1 Filter and regulator

Topic	Reference book (optional)
Capacitor filter, Π section filter ripple factor, series and shunt voltage regulator, percentage regulator, 78xx and 79xx series, concepts of smps	Linear integrated circuits-D.Roy Choudhury, Shail B. Jain(Chapter 6&7) Electronic Devices and Circuit Theory-Boylested Chapter 18)

Assignment: (These are typical examples, indicative of the type of problems to be set for tutorials.)

1. Determine the regulated voltage and circuit currents for the shunt regulator.

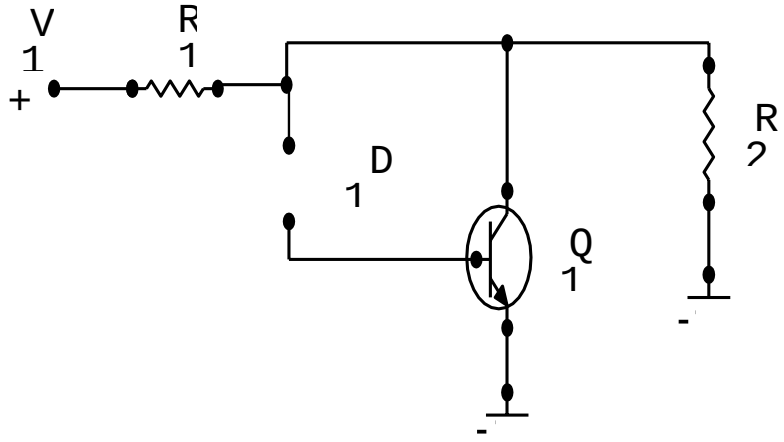

2. Calculate the regulated output voltage in the ckt of fig.

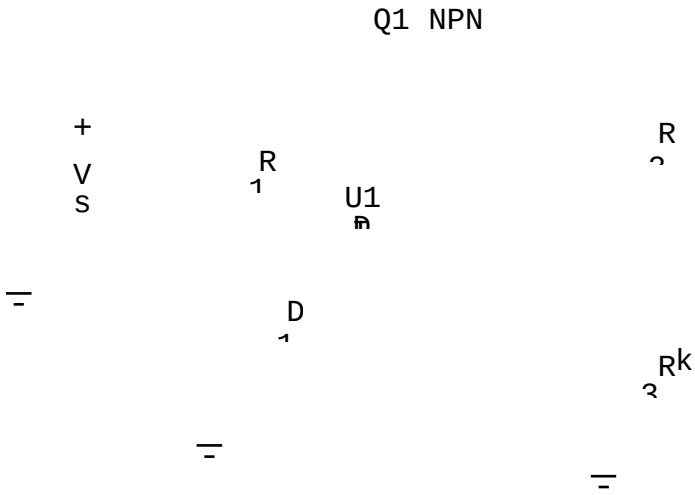

3. A 500 μF capacitor provides a load current of 200 mA at 8% ripple; calculate the pick rectified voltage obtained from the 60 Hz supply and the dc voltage across the filter capacitor.

4. Calculate the size of the filter capacitor needed to obtained a filtered voltage with 7% ripple at a load of 200mA. The full wave rectified voltage is 30v, and the supply is 60 Hz

Moudule-2 : Transistor Biasing and stability

Topic	Reference Book (optional)
Q Point, self – Bias – CE, compensation technique, h-module of transistors. Expression for voltage gain, current, gain Input and output impedance, trans- resistance and Tran conductance emitter follower circuits	Electronics –fundamental— D Chattopadhaya & P.C. Rakhit (Chapter---8)
High frequency modes of transistor	Microelectronic circuits---Sedra & Smith (Chapter---3)

Assignment: (These are typical examples, indicative of the type of problems to be set for tutorials.

(1) Find the Q point of a self–bias transistor circuit with the following specification:- V_{CC}= 22.5 volt, R_L= 5.6 KΩ,R_E= 1 KΩ ,R_1= 90 KΩ, R_2= 10 KΩ V_{BE}=0.7 volt and β=55 Assume $I_b >> I_{C0}$

(2) A CE transistor amplifier is characterised by h_{ie} = 2 KΩ, h_{re} $2*10^{-4}$, h_{fe}= 50 and h_{oe}= $20* 10^{-6}$ A/V. If the load resistance is 4 KΩ and the source resistance is 200 Ω determine the input resistance, the output resistance and the voltage, current and power gain.

(3) A particular BJT operating at Ic= 2mA has Cμ=I pf, Cπ =10 pf and β = 150. What are f_t& f_β for this situation?

Module -3: Transistor Amplifiers:

Topic	Reference Book.(optional)
RC coupled amplifier, function of all components equivalent circuit, derivation of voltage gain, current gain, input impedance, frequency response characteristics, lower and upper half frequencies, bandwidth and concept of wide band amplifier.	Electronics Devices and Circuits---- S Salivahanan N. Suresh kumar A. Vallavaraj

Assignment:

1. A CE-RC coupled amplifier uses transistors with the following h-parameters: h_{fe} = 50 , h_{ie} = 1100 Ω, h_{oe} = $10 *10^{-6}$ m_{hos}, h_{re} = $2.5*10^{-4}$. The value of g_m at the operating point is 200m_{hos}. The biasing resistor R1 &R2 may be neglected being large in comparison with RI. The load resistor R_c = 5 K Ω. Let the total shunt capacitance C= 200μf in the input Ckt. and the coupling capacitor Cc= 7 μf. Calculate for one stage of the amplifier
   (a) mid band current gain (b) mid band voltage gain (c) lower and higher 3 db frequencies and (d) gain-bandwidth product.

Module – 4: Feed back Amplifier and Oscillator

Topic	Reference Book(optional)
Feed back concept, negative and positive feed back, voltage/current, series / shunt feed back, bark house ,ulprits, Hartley's , phase shift, Wein bridge and crystal oscillator.	(1) Electronics devices and circuits (Chapter 14& 15) S Salivahanan N. Suresh kumar A. Vallavaraj (2) Electronics-Fundamentals and Applications----- D Chattopadhayay P. C. Rakhit (Chapter—10)

Assignment: (These are typical examples, indicative of the type of problems to be set for tutorials.)

1. An Hartley oscillator is designed with L_1 = 20 μH, L_2 = 2 mH and a variable capacitance. Determine the range of capacitance values if the frequency is varied between 950 and 2050 Khz.
2. A Colpitts oscillator is designed with C_2 = 100pf and C_1 = 7500pf. The inductance is variable. Determine the range of inductance values, if the frequency of oscillator is vary between 0.950 and 2050 Khz
3. In an RC phase shift oscillator, if its frequency of oscillation is 955 Hz and $R_1 = R_2 = R_3$ = 680 KΩ, Find the value of capacitors.
4. In the Wein –Bridge oscillator, if the RC network consists of resistance of 200 KΩ and the capacitance of 300pf, find its frequency of oscillation.
5. A crystal has the following parameters: L = 0.33 H, C_1= 0.065 pf, C_L 1.0 pf and R = 5.5 KΩ. Find the series resonant frequency and Q factor of the crystal.
6. The open loop gain of an amplifier is -200. A voltage series negative feed back is used with a feed back ratio of -0.02. The input and the output impedance of the amplifier are 2 KΩ and 40 KΩ, respectively in the absence of feedback. Determine the closed loop gain, and the input and the output impedance when the feed back circuit is completed.

Module: 5 Operation Amplifier:

Topic:	Reference: (optional)
Ideal opAmp,CMRR,Open &Closed loop circuit, Importance of feedback loop(+ve&-ve),Inverting & Non inverting Amplifier	(1) Op amps and linear Integrated Circuits - R. A. Gayakwad
Constant Current source(Current mirror etc), Level shifter, Voltage follower/Buffer Circuit, Differential Amplifier	(2) Linear integrated circuits-D.Roy Choudhury, shail B.Jain

Assignment: (These are typical examples, indicative of the type of problems to be set for tutorials.)

(1) For the ckt shown in figure , calculate the expression of vo /vi

(2) Design a current source (current Mirror) for generating Io=25µA. Assume: vcc=15v, β=100

(3) For the current mirror shown in figure , determine R so that Io=100µA

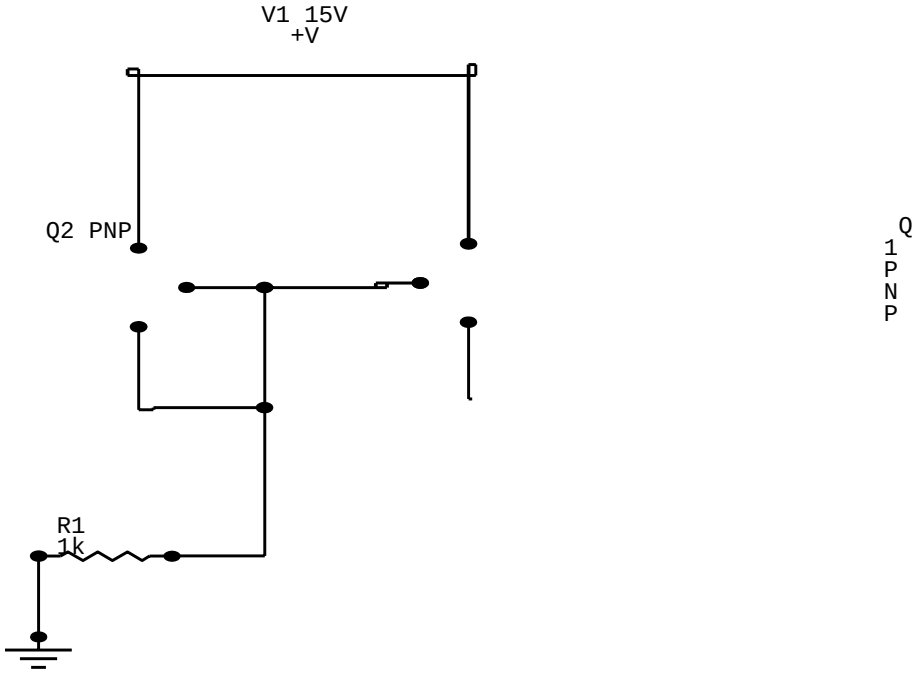

Module:6 Application of operational amplifier

Topic	Reference: book(optional)
Adder.Integrator,differentiator,comparator,schimit trigger, instrumentation amplifier, log& anti log amplifier,Transconductance multiplier, precision rectifier, v to I and I to v converter, free running oscillator	Linear integrated circuits-D Roy choudhury, shail B.Jain

Assignment:
(1) in the ckt of figure, it can be shown that Vo = a1V1+a2V2+a3V3. Find the values of a1, a2 and a3. Also find the value of Vo, if (1) R4 is short ckt (2) R4 removed (3) R1 is short circuited.

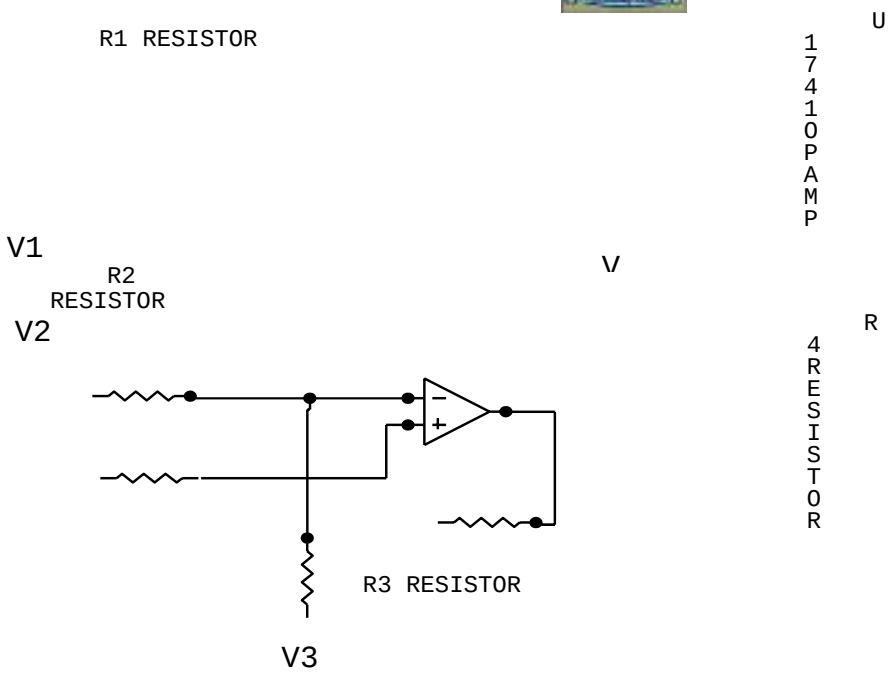

(2) For the instrumentation amplifier shown in figure, verify that Vo= (1+R2/R1+2R2/R1) (V2-V1)

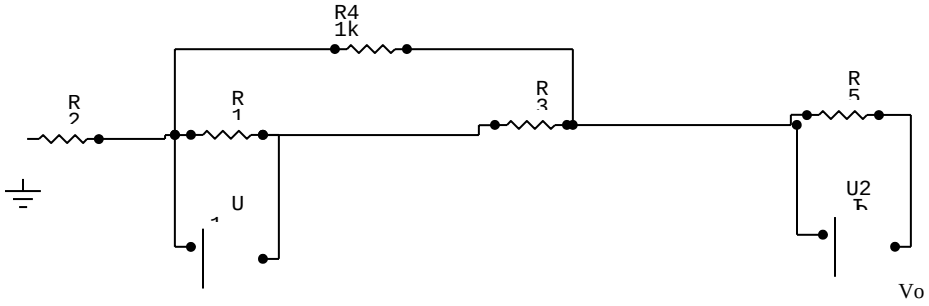

[note- R1=R3, R2=R5]

(3) Prove that the circuit shown in figure is a non inverting integrator with Vo=2/Rc∫Vi dt: where Rl=R2=R3=R4=R

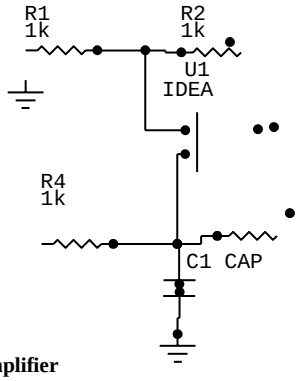

Module: 7 power Amplifier
Assignment:

1. A transformer coupled class A power Amplifier supplies power to an 80 Ω load connected across the secondary of a step-down transformer having a turn ratio 5:1. Determine the maximum power output for a zero signal collector of 120 mA.
2. A CE power amplifier operates under Class A condition with a collector supply of 46 volt. The load line passes through the point (i)Vc=46 volt, Ic=0 and (ii) Vc=0, Ic=2A. The Q-point is chosen at Icq=0.8A and Vcq=27.6 volt, calculate the maximum ac power output, the dc power input and the efficiency.
3. A single turned amplifier has the following parameters: L=120μA, C=100P_F, R=10 Ω, h_{oe}=50*10^{-6}, h_{fe}=100, h_{ie}=2.5KΩ, R_T=10KΩ. Calculate

(i) The resonant frequency (ii) The bandwidth (iii) the maximum voltage gain.

Module: 8 Multivibrator

Assignment:

1. In an Astable multivibrator, R_A=2.2 KΩ, R_B=6.8 KΩ, and C=0.01μF, calculate (i) t_{HIGH}, (ii) t_{LOW}, (iii) free running freq, (iv) duty cycle.
2. In a monostable multivibrator, the frequency of the input triggering is 15 KHz.If the value of C=0.01μF, calculate the value of resistance R.

Module: 9 Special Functional Circuit

1. In the VCO, calculate the change in output Frequency if the supply voltage is varied between 9 volt and 11 volt. Assume V_{CC}= 12V, R_T= 6.8 KΩ, C_T= 75P$_F$, and R1= 15 KΩ, and R2= 100 KΩ.
2. Determine the dc control voltage Vc at lock if signal frequency fs=10KHz, VCO free running frequency is 10.66KHz, and the voltage to frequency transform coefficient of VCO is 6600Hz/V.
3. Calculate the output frequency f_o, lock range Δf_L,and capture range Δfc of a 565 PLL if R_T= 10 KΩ, C_T= 0.01μF, and C= 10μF.

Reference Book(optional)

a) Linear Integrated Circuit D.Roy Choudhary
S.B. Jain (Chapter-9)
b) Electronics Devices and Circuit Theory Boylestad & Nashelshy.
c) Electronics Devices and Circuits Salivahanan,N.S.Kumar

Practical Detailed manuals will be uploaded later.

NUMERICAL METHODS
Code : M(CS) 391
Credits :1

1. Assignments on Newton forward /backward, Lagrange's interpolation.
2. Assignments on numerical integration using Trapezoidal rule, Simpson's 1/3 rule, Weddle's rule.
3. Assignments on numerical solution of a system of linear equations using Gauss elimination and Gauss-Seidel iterations.
4. Assignments on numerical solution of Algebraic Equation by Regular-falsi and Newton Raphson methods.
5. Assignments on ordinary differential equation: Euler's and Runga-Kutta methods.
6. Introduction to Software Packages: Matlab / Scilab / Labview / Mathematica.

Circuits and Networks Laboratory
Code: EC391
Contacts: 3P
Credits: 2

1. Characteristics of Series & Parallel Resonant circuits
2. Verification of Network Theorems
3. Transient Response in R-L & R-C Networks ; simulation / hardware
4. Transient Response in RLC Series & Parallel Circuits & Networks ; simulation / hardware
5. Determination of Impedance (Z), and Admittance (Y) parameters of Two-port networks
6. Generation of periodic, exponential, sinusoidal, damped sinusoidal, step, impulse, and ramp signals using MATLAB
7. Representation of Poles and Zeros in s-plane, determination of partial fraction expansion in s-domain and cascade connection of second-order systems using MATLAB
8. Determination of Laplace Transform, different time domain functions, and Inverse Laplace
9. Transformation using MATLAB

Note: An Institution / college may opt for some other hardware or software simulation wherever possible in place of MATLAB

Solid State Devices Laboratory
Code: EC392
Contacts: 3P
Credits: 2

Perform any four experiments:
Ex 1: Study input characteristics of BJT in common-emitter configuration.

Ex 2: Study output characteristics of BJT in common-emitter configuration for different base currents and hence determine hybrid parameters.

Ex 3: Study output characteristics of BJT in common-emitter configuration and find performance parameters (Voltage Gain, Current Gain, Input Impedance, Output Impedance).

Ex 4: Study the variation of small-signal voltage gain with frequency of a common-emitter RC coupled amplifier.

Ex 5: Study of drain characteristics and transfer characteristics of a JFET and hence determine the FET parameters (drain resistance, transconductance & amplification factor).

Ex 6: Study the variation of small-signal voltage gain with frequency of a JFET.

Module 2:

Perform any two experiments

Ex 1: Study of C-V characteristics of a Varactor diode by appropriate software. Ex 2:

Study of C-V characteristics of a MOS structure by appropriate software.

Ex3: Study of drain characteristics and transfer characteristics of a MOSFET and hence determine the FET parameters (drain resistance, transconductance & amplification factor).

Signals and Systems Laboratory
Code: 393
Contacts: 3P
Credits: 2

1. To study Z- transform of: a) Sinusoidal signals b) Step functions.

2. To compare Fourier and Laplace transformations of a signal.
3. To study convolution theorem in time and frequency domain.
4. To Study Signal Synthesis via sum of harmonics.
5. To study LPF &HPF, band pass and reject filters using RC circuits.
6. To demonstrate how analog signals are sampled and how different sampling rates affect the outputs.
7. To study sampling theorem for low pass signals and band pass signals .
8. To determine the components of: a) Square wave b) Clipped sine wave.

Analog Electronic Circuits Laboratory
Code:EC394.
Contacts: 3P
Credits: 2

Any 8 experiments. A College has to design a new design oriented experiment.

1. Study of Diode as clipper & clamper
2. Study of Zener diode as a voltage regulator
3. Study of ripple and regulation characteristics of full wave rectifier without and with capacitor filter
4. Study of characteristics curves of B.J.T & F.E.T .
5. Design a two-stage R-C coupled amplifier & study of it's gain & Bandwidth.
6. Study of class A & class B power amplifiers.
7. Study of class C & Push-Pull amplifiers.
8. Realization of current mirror & level shifter circuit using Operational Amplifiers.
9. Study of timer circuit using NE555 & configuration for monostable & astable multivibrator.
10. Design a Bistable multivibrator using NE 555.
11. Study of Switched Mode Power Supply & construction of a linear voltage regulator using regulator IC chip.
12. Design a simple function generator using IC.
13. Realization of a V-to-I & I-to-V converter using Op-Amps.
14. Realization of a Phase Locked Loop using Voltage Controlled Oscillator (VCO).
15. Study of D.A.C & A.D.C.

SEMESTER - IV

Theory

VALUES & ETHICS IN PROFESSION

HU-401
Contracts:3L
Credits- 3

Science, Technology and Engineering as knowledge and as Social and Professional Activities

Effects of Technological Growth:

Rapid Technological growth and depletion of resources, Reports of the Club of Rome. Limits of growth: sustainable development Energy Crisis: Renewable Energy Resources
Environmental degradation and pollution. Eco-friendly Technologies. Environmental Regulations, Environmental Ethics
Appropriate Technology Movement of Schumacher; later developments
Technology and developing notions. Problems of Technology transfer, Technology assessment impact analysis.
Human Operator in Engineering projects and industries. Problems of man, machine, interaction, Impact of assembly line and automation. Human centered Technology.

Ethics of Profession:

Engineering profession: Ethical issues in Engineering practice, Conflicts between business demands and professional ideals. Social and ethical responsibilities of Technologists. Codes of professional ethics. Whistle blowing and beyond, Case studies.

Profession and Human Values:

Values Crisis in contemporary society
Nature of values: Value Spectrum of a good life Psychological
values: Integrated personality; mental health
Societal values: The modern search for a good society, justice, democracy, secularism, rule of law, values in Indian Constitution. Aesthetic values: Perception and enjoyment of beauty, simplicity, clarity
Moral and ethical values: Nature of moral judgements; canons of ethics; ethics of virtue; ethics of duty; ethics of responsibility.

Books:

1. Stephen H Unger, Controlling Technology: Ethics and the Responsible Engineers, John Wiley & Sons, New York 1994 (2nd Ed)
2. Deborah Johnson, Ethical Issues in Engineering, Prentice Hall, Englewood Cliffs, New Jersey 1991.

3. A N Tripathi, Human values in the Engineering Profession, Monograph published by IIM, Calcutta 1996.

Ph 401 : :Physics
Contacts : 3L + 1T
Credits 4

Module 1:

Vector Calculus:

1.1 Physical significances of grad, div, curl. Line integral, surface integral, volume integral- physical examples in the context of electricity and magnetism and statements of Stokes theorem and Gauss theorem [No Proof]. Expression of grad, div, curl and Laplacian in Spherical and Cylindrical co-ordinates. 2L

Module 2 :

Electricity

Coulumbs law in vector form. Electrostatic field and its curl. Gauss's law in integral form and conversion to differential form . Electrostatic potential and field, Poisson's Eqn. Laplace's eqn (Application to Cartesian, Spherically and Cylindrically symmetric systems – effective 1D problems) Electric current, drift velocity, current density, continuity equation, steady current.

5L

Dielectrics-concept of polarization, the relation D=ε0E+P, Polarizability. Electronic polarization and polarization in monoatomic and polyatomic gases.

3L

Module 3:

Magnetostatics & Time Varying Field:

3. Lorentz force, force on a small current element placed in a magnetic field. Biot-Savart law and its applications, divergence of magnetic field, vector potential, Ampere's law in integral form and conversion to differential form. Faraday's law of electro-magnetic induction in integral form and conversion to differential form. 3L

Module 4:

Electromagnetic Theory:

4.1 Concept of displacement current Maxwell's field equations, Maxwell's wave equation and its solution for free space. E.M. wave in a charge free conducting media, Skin depth, physical significance of Skin Depth, E.M. energy flow, & Poynting Vector.

6L

Module 5:

Quantum Mechanics:

Generalised coordinates, Lagrange's Equation of motion and Lagrangian, generalised force potential, momenta and energy. Hamilton's Equation of motion and Hamiltonian. Properties of Hamilton and Hamilton's equation of motion. 4L
Course should be discussed along with physical problems of 1-D motion

Concept of probability and probability density, operators, commutator. Formulation of quantum mechanics and Basic postulates, Operator correspondence, Time dependent Schrödinger's equation, formulation of time independent Schrödinger's equation by method of separation of variables, Physical interpretation of wave function ψ (normalization and probability interpretation), Expectation values, Application of Schrödinger equation – Particle in an infinite square well potential (1-D and 3-D potential well), Discussion on degenerate levels. 9L

Module 6:

Statistical Mechanics:

Concept of energy levels and energy states. Microstates, macrostates and thermodynamic probability, equilibrium macrostate. MB, FD, BE statistics (No deduction necessary), fermions, bosons (definitions in terms of spin, examples), physical significance and application, classical limits of quantum statistics Fermi distribution at zero & non-zero temperature, Calculation of Fermi level in metals, also total energy at absolute zero of temperature and total number of particles,

Bose-Einstein statistics – Planck’s law of blackbody radiation..

7L

CH401: Basic Environmental Engineering & Elementary Biology
Contacts : 3L
Credits : 3

General

Basic ideas of environment, basic concepts, man, society & environment, their interrelationship.

1L

Mathematics of population growth and associated problems, Importance of population study in environmental engineering, definition of resource, types of resource, renewable, non-renewable, potentially renewable, effect of excessive use vis-à-vis population growth, Sustainable Development.

2L

Materials balance: Steady state conservation system, steady state system with non conservative pollutants, step function.

1L

Environmental degradation: Natural environmental Hazards like Flood, earthquake, Landslide-causes, effects and control/management;
Anthropogenic degradation like Acid rain-cause, effects and control. Nature and scope of Environmental Science and Engineering.

2L

Ecology

Elements of ecology: System, open system, closed system, definition of ecology, species, population, community, definition of ecosystem-components types and function. 1L

Structure and function of the following ecosystem: Forest ecosystem, Grassland ecosystem, Desert ecosystem, Aquatic ecosystems, Mangrove ecosystem (special reference to Sundar ban); Food chain [definition and one example of each food chain], Food web. 2L

Biogeochemical Cycle- definition, significance, flow chart of different cycles with only elementary reaction [Oxygen, carbon, Nitrogen, Phosphate, Sulphur]. 1L

Biodiversity- types, importance, Endemic species, Biodiversity Hot-spot, Threats to biodiversity, Conservation of biodiversity.

2L

Air pollution and control

Atmospheric Composition: Troposphere, Stratosphere, Mesosphere, Thermosphere, Tropopause and Mesopause.

1L

Energy balance: Conductive and Convective heat transfer, radiation heat transfer, simple global temperature model [Earth as a black body, earth as albedo], Problems. 1L

Green house effects: Definition, impact of greenhouse gases on the global climate and consequently on sea water level, agriculture and marine food.Global warming and its consequence, Control of Global warming. Earth's heat budget. 1L

Lapse rate: Ambient lapse rate Adiabatic lapse rate, atmospheric stability, temperature inversion (radiation inversion).

2L

Atmospheric dispersion: Maximum mixing depth, ventilation coefficient, effective stack height, smokestack plumes and Gaussian plume model.

2L

Definition of pollutants and contaminants, Primary and secondary pollutants: emission standard, criteria pollutant.
Sources and effect of different air pollutants- Suspended particulate matter, oxides of carbon, oxides of nitrogen, oxides of sulphur, particulate, PAN.

2L

Smog, Photochemical smog and London smog.
Depletion Ozone layer: CFC, destruction of ozone layer by CFC, impact of other green house gases, effect of ozone modification.

1L

Standards and control measures: Industrial, commercial and residential air quality standard, control measure (ESP. cyclone separator, bag house, catalytic converter, scrubber (ventury), Statement with brief reference).

1L

Water Pollution and Control

Hydrosphere, Hydrological cycle and Natural water.

Pollutants of water, their origin and effects: Oxygen demanding wastes, pathogens, nutrients, Salts, thermal application, heavy metals, pesticides, volatile organic compounds. 2L

River/Lake/ground water pollution: River: DO, 5 day BOD test, Seeded BOD test, BOD reaction rate constants, Effect of oxygen demanding wastes on river[deoxygenation, reaeration], COD, Oil, Greases, pH. 2L

Lake: Eutrophication [Definition, source and effect]. 1L

Ground water: Aquifers, hydraulic gradient, ground water flow (Definition only) 1L

Standard and control: Waste water standard [BOD, COD, Oil, Grease],

Water Treatment system [coagulation and flocculation, sedimentation and filtration, disinfection, hardness and alkalinity, softening]

Waste water treatment system, primary and secondary treatments [Trickling filters, rotating biological contractor, Activated sludge, sludge treatment, oxidation ponds] tertiary treatment definition.

2L

Water pollution due to the toxic elements and their biochemical effects: Lead, Mercury, Cadmium, and Arsenic

1L

Land Pollution

Lithosphere; Internal structure of earth, rock and soil 1L

Solid Waste: Municipal, industrial, commercial, agricultural, domestic, pathological and hazardous solid wastes; Recovery and disposal method- Open dumping, Land filling, incineration, composting, recycling.

Solid waste management and control (hazardous and biomedical waste). 2L

Noise Pollution

Definition of noise, effect of noise pollution, noise classification [Transport noise, occupational noise, neighbourhood noise]

1L

Definition of noise frequency, noise pressure, noise intensity, noise threshold limit value, equivalent noise level, L_{10} (18 hr Index) , Ld_n .

Noise pollution control. 1L

Environmental Management:

Environmental impact assessment, Environmental Audit, Environmental laws and protection act of India, Different international environmental treaty/ agreement/ protocol. 2L

References/Books

1. Masters, G. M., “Introduction to Environmental Engineering and Science”, Prentice-Hall of India Pvt. Ltd., 1991.
2. De, A. K., “Environmental Chemistry”, New Age International.

ELECTROMAGNETIC THEORY & TRANSMISSION LINES
Code : EC 401 Contacts : 3L +1T =4hrs Credits :4

Electromagnetic Theory

1. Vector calculus - orthogonal Coordinate System, Transformations of coordinate systems; Del operator; Gradient, Divergence, Curl - their physical interpretations; Laplacian operator. *[3]*
2. Coulomb's law, electric field intensity, charge distribution; Gauss' law, flux density and electric field intensity. Divergence theorem. Current Densities, Conductors, Poisson's & Laplace's equations. Uniqueness theorem, Biot-Savart law, Ampere's law, Relation between J & H, Vector magnetic Potential, Stokes' theorem. [5]
3. Faraday's law & Lenz's law. Displacement Current, J_c - J_D Relation, Maxwell's equations, Time-harmonic fields, Wave Equation, Boundary Conditions between media interface; Uniform Plane wave; Plane Wave Propagation in Lossy Dielectric, Loss-less Dielectric, Good Conductor,

Free space; Poynting Theorem, Power flow, Poynting vector, Skin Depth, Surface Resistance; Reflection and Transmission for normal incidence.[10]

Transmission Lines

4. Transmission Lines; Concept of Lumped parameters and Distributed parameters. Line Parameters, Transmission line equations and solutions, Physical significance of the solutions, Propagation constant, Characteristic Impedance; Wavelength; Velocity of Propagation; Distortion-less Line, Reflection and Transmission coefficients; Standing Waves, VSWR, Input Impedance, Smith Chart -Applications; Load Matching Techniques / Quarter wave Matching, Bandwidth problem; Low loss RF transmission lines, line as circuit elements.

[10]

5. Types of transmission line (open 2-wire, coaxial line, micro strip coplanar waveguide), applications and limitations: Design principle, Power handling capacity. Power Dissipation, Breakdown with coaxial line and micro strip line as examples. **[4]**

Radiation of E M Waves

6. Antenna Concepts, Antenna Characteristic; Hertzian dipole (Radiation Fields, Radiation Resistance, Radiation patterns, Directive Gain); Properties and typical applications of Half-wave dipole, Loop antenna, Yagi-Uda array, Array Antennas. [6]

Text Books

1. Principles of Electromagnetics, 4th Edition, Matthew O H Sadiku, Oxford University Press.
2. Electromagnetic Field Theory & Transmission Lines, G.S.N. Raju, Pearson Education
3. Electromagnetic Waves Shevgaonkar, Tata-McGaw-Hillr –R K

Reference Books

1. Engineering Electromagnetics, 2ed Edition - Nathan Ida, Springer India
2. Fields & Waves in Communication Electronics, S. Ramo, J. R. Whinnery & T. Van Duzer, John Wiley
3. Electromagnetic Theory & Applications, A. K. Saxena, Narosa Publishing House Pvt. Ltd.
4. Electromagnetics, 2ed Edition – J A Edminister, Tata-McGraw-Hill.
   Engineering Electromagnetics, 7thEdition-W.H.Hayt & J.A.Buck, Tata-McGraw-Hill
5. Electromagnetic Waves and Transmission Lines- by G.Prasad, J.Prasad and J.Reddy- Scitech

DIGITAL ELECTRONICS & INTEGRATED CIRCUITS

Code : EC 402 **Contacts : 3L +1T =4hrs** **Credits :4**

Module1.

a) Data and number systems; Binary, Octal and Hexadecimal representation and their conversions; BCD,ASCII, EBDIC, Gray codes and their conversions; Signed binary number representation with 1's and 2's complement methods, Binary arithmetic. [5]

b) Venn diagram, Boolean algebra; Various Logic gates- their truth tables and circuits; Representation in SOP and POS forms; Minimization of logic expressions by algebraic method, K-map method [6]

Module-2:

a) Combinational circuits- Adder and Subtractor circuits; Applications and circuits of Encoder, Decoder, Comparator, Multiplexer, De-Multiplexer and Parity Generator. [5]

b) Memory Systems: RAM, ROM, EPROM, EEROM [4]

c) Design of combinational circuits-using ROM, Programming logic devices and gate arrays. (PLAs and PLDs) [4]

Module-3:

Sequential Circuits- Basic memory element-S-R, J-K, D and T Flip Flops, various types of Registers and counters and their design, Irregular counter, State table and state transition diagram, sequential circuits design methodology. [6]

Module-4:

a) Different types of A/D and D/A conversion techniques. [4]

b) Logic families- TTL, ECL, MOS and CMOS, their operation and specifications. [6]

Total: 40 hours

Textbooks:

1. A.Anand Kumar, Fundamentals of Digital Circuits- PHI
2. A.K.Maini- Digital Electronics- Wiley-India
3. Kharate- Digital Electronics- Oxford

Reference:

1. Morries Mano- Digital Logic Design- PHI
2. R.P.Jain—Modern Digital Electronics, 2/e , Mc Graw Hill
3. H.Taub & D.Shilling, Digital Integrated Electronics- Mc Graw Hill.
4. D.Ray Chaudhuri- Digital Circuits-Vol-I & II, 2/e- Platinum Publishers
5. Givone—Digital Principles & Design, Mc Graw Hill
6. Tocci, Widmer, Moss- Digital Systems,9/e- Pearson
7. S.K.Mandal, Digital Electronics Principles and Applications- Mc Graw Hill.
8. J.Bignell & R.Donovan-Digital Electronics-5/e- Cenage Learning.
9. Leach & Malvino—Digital Principles & Application, 5/e, Mc Graw Hill
10. Floyed & Jain- Digital Fundamentals-Pearson.
11. P.Raja- Digital Electronics- Scitech Publications
12. S.Aligahanan, S.Aribazhagan, Digital Circuit & Design- Bikas Publishing

Practical

TECHNICAL REPORT WRITING & LANGUAGE LABORATORY PRACTICE
Code: HU481
Cr-2

Guidelines for Course Execution:

Objectives of this Course: This course has been designed:

1. **To inculcate a sense of confidence in the students.**
2. **To help them become good communicators both socially and professionally.**
3. **To assist them to enhance their power of Technical Communication.**

Detailed Course Outlines:

A. ***Technical Report Writing*** : 2L+6P

1. Report Types (Organizational / Commercial / Business / Project)
2. Report Format & Organization of Writing Materials
3. Report Writing (Practice Sessions & Workshops)

B. Language Laboratory Practice

I. Introductory Lecture to help the students get a clear idea of Technical Communication & the need of Language Laboratory Practice Sessions 2L

2. Conversation Practice Sessions: (To be done as real life interactions) 2L+4P

a) Training the students by using Language Lab Device/Recommended Texts/cassettes /cd's to get their Listening Skill & Speaking Skill honed

b) Introducing Role Play & honing over all Communicative Competence

3. Group Discussion Sessions: 2L+6P

a) Teaching Strategies of Group Discussion

b) Introducing Different Models & Topics of Group Discussion

c) Exploring Live /Recorded GD Sessions for mending students' attitude/approach & for taking remedial measure

Interview Sessions; 2L+6P

a) Training students to face Job Interviews confidently and successfully

b) Arranging Mock Interviews and Practice Sessions for integrating Listening Skill with Speaking Skill in a formal situation for effective communication

4. Presentation: 2L+6P

a) Teaching Presentation as a skill

b) Strategies and Standard Practices of Individual /Group Presentation

c) Media & Means of Presentation: OHP/POWER POINT/ Other Audio-Visual Aids

5. Competitive Examination: 2L+2P

a) Making the students aware of Provincial /National/International Competitive Examinations

b) Strategies/Tactics for success in Competitive Examinations

c) SWOT Analysis and its Application in fixing Target

Books – Recommended:

Nira Konar: English Language Laboratory: A Comprehensive Manual
PHI Learning, 2011

D. Sudharani: Advanced Manual for Communication Laboratories & Technical Report Writing
Pearson Education (W.B. edition), 2011

References:

Adrian Duff et. al. (ed.): Cambridge Skills for Fluency

A) Speaking (Levels 1-4 Audio Cassettes/Handbooks)

B) Listening (Levels 1-4 Audio Cassettes/Handbooks)
Cambridge University Press 1998
Mark Hancock: English Pronunciation in Use
4 Audio Cassettes/CD'S OUP 2004

Physics Lab-2
Code: PH-491
Contacts: (3P)
Credit: (2)

Group 1: Experiments on Electricity and Mangentism

1. Determination of dielectric constant of a given dielectric material.
3. Determination of resistance of ballistic galvanometer by half deflection method and study of variation of logarithmic decrement with series resistance.
4. Determination of the thermo-electric power at a certain temperature of the given thermocouple.
5. Determination of specific charge (e/m) of electron by J.J. Thomson's method.

Group 2: Quantum Physics

6. Determination of Planck's constant using photocell.
7. Determination of Lande'g factor using Electron spin resonance spetrometer.
8. Determination of Stefan's radiation constant
9. Verification of Bohr's atomic orbital theory through Frank-Hertz experiment.
10. Determination of Rydberg constant by studying Hydrogen/ Helium spectrum

Group 3: Modern Physics

11. Determination of Hall co-efficient of semiconductors.
12. Determination of band gap of semiconductors.

13. To study current-voltage characteristics, load response, areal characteristics and spectral response of photo voltaic solar cells.

a) A candidate is required to perform 3 experiments taking one from each group. Initiative should be taken so that most of the Experiments are covered in a college in the distribution mentioned above. Emphasis should be given on the estimation of error in the data taken.

b) In addition a student should perform one more experiments where he/she will have to transduce the output of any of the above experiments or the experiment mentioned in c] into electrical voltage and collect the data in a computer using phoenix or similar interface.

c) Innovative experiment: One more experiment designed by the student or the concerned teacher or both.

Note:

i. **Failure to perform each experiment mentioned in b] and c] should be compensated by *two* experiments mentioned in the above list.**
ii. **At the end of the semester report should sent to the board of studies regarding experiments, actually performed by the college, mentioned in b] and c]**
iii. **Experiment in b] and c] can be coupled and parts of a single experiment.**

Recommended Text Books and Reference Books:
For Both Physics I and II

1. B. Dutta Roy (Basic Physics)
2. R.K. Kar (Engineering Physics)
3. Mani and Meheta (Modern Physics)
4.. Arthur Baiser (Perspective & Concept of Modern Physics) Physics

I (PH101/201)

Vibration and Waves

6. Kingsler and Frey
7. D.P. Roychaudhury
8. N.K. Bajaj (Waves and Oscillations)
9. K. Bhattacharya
10. R.P. Singh (Physics of Oscillations and Waves)
11. A.B. Gupta (College Physics Vol.II)
12. Chattopadhya and Rakshit (Vibration, Waves and Acoustics)

Optics

3. Möler (Physical Optics)
4. A.K. Ghatak
5. E. Hecht (Optics)
6. E. Hecht (Schaum Series)
7. F.A. Jenkins and H.E. White

8. 6. Chita Ranjan Dasgupta (Degree Physics Vol 3)

Quantum Physics

4. Eisberg and Resnick
5. A.K. Ghatak and S. Lokenathan
6. S.N. Ghoshal (Introductory Quantum Mechanics)
7. E.E. Anderson (Modern Physics)
8. Haliday, Resnick and Crane (Physics vol.III)
9. Binayak Dutta Roy [Elements of Quantum Mechanics]

Crystallography

1. S.O. Pillai (a. Solid state physics b. Problem in Solid state physics)
2. A.J. Dekker
3. Aschroft and Mermin
4. Ali Omar
5. R.L. Singhal
6. Jak Tareen and Trn Kutty (Basic course in Crystallography

Laser and Holography

2. A.K. Ghatak and Thyagarajan (Laser)
3. Tarasov (Laser)
4. P.K. Chakraborty (Optics)
5. B. Ghosh and K.G. Majumder (Optics)
6. B.B. Laud (Laser and Non-linear Optics)
7. Bhattacharyya [Engineering Physics] Oxford

Physics II(PH 301)

Classical Mechanics (For Module 5.1 in PH 301)
H. Goldstein
A.K. Roychaudhuri
R.G. Takwal and P.S. Puranik
Rana and Joag
M. Speigel (Schaum Series)
J.C. Upadhya (Mechanics)

Electricity and Magnetism

9. Reitz, Milford and Christy
10. David J. Griffith
11. D. Chattopadhyay and P.C. Rakshit
12. Shadowitz (The Electromagnetic Field)

Quantum Mechanics

10. Eisberg and Resnick
11. A.K. Ghatak and S. Lokenathan
12. S.N. Ghoshal (Introductory Quantum Mechanics)
13. E.E. Anderson (Modern Physics)
14. Haliday, Resnick and Crane (Physics vol.III)
15. Binayak Dutta Roy [Elements of Quantum Mechanics]

Statistical Mechanics

1. Sears and Sallinger (Kinetic Theory, Thermodynamics and Statistical Thermodynamics)
2. Mondal (Statistical Physics)
3. S.N. Ghoshal (Atomic and Nuclear Physics)
4. Singh and Singh
5. B.B. Laud (Statistical Mechanics)
6. F. Reif (Statistical Mechanics)

Dilectrics

8. Bhattacharyya [Engineering Physics] Oxford

Electromagnetic Wave and Transmission Lines
Code: EC491
Contacts: 3P
Credits: 2

[At least THREE experiments from Module I and FOUR experiments from Module II]

Module I:

1. Plotting of Standing Wave Pattern along a transmission line when the line is open-circuited, short-circuited and terminated by a resistive load at the loadend.

2. Input Impedance of a terminated coaxial line using shift in minima technique.
3. Study of Smith chart on Matlab platform.
4. Simulation study of Smith chart - Single and double stub matching.

Module II:

5. Radiation Pattern of dipole antenna.
6. Radiation Pattern of a folded-dipole antenna.
7. Radiation pattern of a 3-element Yagi-Uda Antenna.
8. Beam width, gain and radiation pattern of a 3-element, 5-element and 7-element. Yagi-Uda antenna - Comparative study.
9. Radiation pattern, Gain, Directivity of a Pyramidal Horn Antenna.
10. Study of Spectrum Analyzer.

Digital Electronic & Integrated Circuits Laboratory Code:
EC492
Contacts: 3P
Credits: 2

1. Realization of basic gates using Universal logic gates.
2. Code conversion circuits- BCD to Excess-3 and vice-versa.

3 Four-bit parity generator and comparator circuits.

4. Construction of simple Decoder and Multiplexer circuits using logic gates.
5. Design of combinational circuit for BCD to decimal conversion to drive 7-segment display using multiplexer.
6. Construction of simple arithmetic circuits-Adder, Subtractor.
7. Realization of RS-JK and D flip-flops using Universal logic gates.
8. Realization of Universal Register using JK flip-flops and logic gates.

Realization of Universal Register using multiplexer and flip-flops.

9.

10. Construction of Adder circuit using Shift Register and full Adder.
11. Realization of Asynchronous Up/Down counter.
12. Realization of Synchronous Up/Down counter.
13. Design of Sequential Counter with irregular sequences.
14. Realization of Ring counter and Johnson's counter.
15. Construction of adder circuit using Shift Register and full Adder.

SEMESTER - V
Theory

Economics for Engineers HU-501
Contracts: 3L
Credits- 3

Module-I

1. Economic Decisions Making – Overview, Problems, Role, Decision making process.
2. Engineering Costs & Estimation – Fixed, Variable, Marginal & Average Costs, Sunk Costs, Opportunity Costs, Recurring And Nonrecurring Costs, Incremental Costs, Cash Costs vs Book Costs, Life-Cycle Costs; Types Of Estimate, Estimating Models - Per-Unit Model, Segmenting Model, Cost Indexes, Power-Sizing Model, Improvement & Learning Curve, Benefits.

Module-II

3. Cash Flow, Interest and Equivalence: Cash Flow – Diagrams, Categories & Computation, Time Value of Money, Debt repayment, Nominal & Effective Interest.
4. Cash Flow & Rate Of Return Analysis – Calculations, Treatment of Salvage Value, Annual Cash Flow Analysis, Analysis Periods; Internal Rate Of Return, Calculating Rate of Return, Incremental Analysis; Best Alternative Choosing An Analysis Method, Future Worth Analysis, Benefit-Cost Ratio Analysis, Sensitivity And Breakeven Analysis. Economic Analysis In The Public Sector - Quantifying And Valuing Benefits & drawbacks.

Module-III

5. Inflation And Price Change – Definition, Effects, Causes, Price Change with Indexes, Types of Index, Composite vs Commodity Indexes, Use of Price Indexes In Engineering Economic Analysis, Cash Flows that inflate at different Rates.
6. Present Worth Analysis: End-Of-Year Convention, Viewpoint Of Economic Analysis Studies, Borrowed Money Viewpoint, Effect Of Inflation & Deflation, Taxes, Economic Criteria, Applying Present Worth Techniques, Multiple Alternatives.
7. Uncertainty In Future Events - Estimates and Their Use in Economic Analysis, Range Of Estimates, Probability, Joint Probability Distributions, Expected Value, Economic Decision Trees, Risk, Risk vs Return, Simulation, Real Options.

Module-IV

8. Depreciation - Basic Aspects, Deterioration & Obsolescence, Depreciation And Expenses, Types Of Property, Depreciation Calculation Fundamentals, Depreciation And Capital Allowance Methods, Straight-Line Depreciation Declining Balance Depreciation, Common Elements Of Tax Regulations For Depreciation And Capital Allowances.
9. Replacement Analysis - Replacement Analysis Decision Map, Minimum Cost Life of a New Asset, Marginal Cost, Minimum Cost Life Problems.
10. Accounting – Function, Balance Sheet, Income Statement, Financial Ratios Capital Transactions, Cost Accounting, Direct and Indirect Costs, Indirect Cost Allocation. ***Readings***

1. James L.Riggs,David D. Bedworth, Sabah U. Randhawa : Economics for Engineers 4e , Tata McGraw-Hill
2. Donald Newnan, Ted Eschembach, Jerome Lavelle : Engineering Economics Analysis, OUP
3. John A. White, Kenneth E.Case,David B.Pratt : Principle of Engineering Economic Analysis, John Wiley
4. Sullivan and Wicks: Engineering Economy, Pearson
5. R.Paneer Seelvan: Engineering Economics, PHI
6. Michael R Lindeburg : Engineering Economics Analysis, Professional Pub

EC501 - Analog Communication

EC 501 **Contacts: 3-1-0** **Credits: 4**

Sr No	Topic	Hrs
Mod-1	**Introduction to Analog Communication:** Elements of communication system - Transmitters, Transmission channels & receivers (1), Concept of modulation, its needs (1). **Continuous Wave Linear Modulation:** a) Amplitude modulation(AM-DSB/TC): Time domain representation of AM signal (expression derived using a single tone message), modulation index [1], frequency domain (spectral) representations, illustration of the carrier and side band components; transmission bandwidth for AM; Phasor diagram of an AM signal; [2] Calculation of Transmitted power & sideband power & Efficiency ; concept of under, over and critical modulation of AM-DSB-TC.[2] b) Other Amplitude Modulations: Double side band suppressed carrier (DSBSC) modulation: time and frequency domain expressions, bandwidth and transmission power for DSB.[1] Single side band modulation (SSB) both TC & SC and only the basic concept of VSB, Spectra and band-width. [2]	9
Mod-2	**Generation & Detection of Amplitude Modulation**: a) Generation of AM: Concept of i) Gated and ii) Square law modulators, Balanced Modulator. [2] b) Generation of SSB: Filter method, Phase shift method and the Third method [2] **Demodulation for Linear Modulation:** Demodulation of AM signals: Detection of AM by envelope detector [1], Synchronous detection for AM-SC, Effects of Frequency & Phase mismatch, Corrections. [2] **Principle of Super heterodyne receivers:** Super heterodyning principle, intermediate frequency, Local oscillator frequency, image frequency. [2]	9
Mod-3	**Angle Modulation:** a) Frequency Modulation (FM) and Phase Modulation (PM): Time and Frequency domain representations, Spectral representation of FM and PM for a single tone message, Bessel's functions and Fourier series. (2); Phasor diagram (1); b) **Generation of FM & PM:** Narrow and Wide-band angle modulation, Basic block diagram representation of generation of FM & PM, Concept of VCO & Reactance modulator (2)	8

c) **Demodulation of FM and PM:** Concept of frequency discriminators (1), Phase Locked Loop (2)

Mod - 4 **Multiplexing** 10

a) Frequency Division Multiplexing, Time Division Multiplexing, (FDM) (1)
b) Stereo – AM and FM: Basic concepts with block diagrams (2)

c) Random Signals and Noise in Communication System:

i) Noise in Communication systems – Internal & External noise, Noise Temperature, Signal-to-Noise ratio, White noise, thermal noise, Figure of Merit. (2)

iii)Noise performance in Analog Communication systems: SNR calculation for DSB/TC, DSB-SC, SSB-TC, SSB- SC & FM. (5)

Total 36 Hours

Text Books:

7. Taub and Schilling , "Principles of Communication Systems", 2nd ed., Mc-Graw Hill
8. B.P.Lathi -Communication Systems- BS Publications
2. V Chandra Sekar – Analog Communication- Oxford University Press

References:

9. Carlson—Communication System,4/e , Mc-Graw Hill
10. Proakis & Salehi Fundamentals of Communication Systems- Pearson
11. Singh & Sapre—Communication Systems: 2/e, TMH
12. P K Ghosh- Principles of Electrical Communications- University Press
13. L.W.Couch Ii, "Digital and Analog Communication Systems", 2/e, Macmillan Publishing
14. Blake, Electronic Communication Systems- Cengage Learning
15. S Sharma, Analog Communication Systems- Katson Books

Learning outcome:

Module – 1: The learner must be able to appreciate the need for modulation and calculate the antenna size for different carrier frequencies. From the functional representation of the modulated carrier wave, the learner must be able to identify the type of modulation, calculate the side-band frequencies, identify the modulating and carrier frequencies, decide the type of generation method to be adopted. Solve problems.

Module – 2: After understanding the basic concepts the learner must be able to compare between the different demodulation methods, design an envelope detector, calculate the IF and image frequencies for the superheterdyne receivers given the carrier and modulating frequencies, calculate the oscillator frequency.

Module – 3: From the functional representation of the modulated carrier wave, the learner must be able to identify the type of modulation, calculate the side-band frequencies, identify the modulating and carrier frequencies, decide the type of generation method to be adopted. Solve problems.

Module – 4: Appreciate the importance of Multiplexing, find out their application areas. The learner must be able to calculate the Noise temperature & SNR for different systems, also compare between the performance of the different modulation methods by comparing their SNR.

Microprocessor & Microcontroller
Code: EC502
Contact: 3L + 1T
Credits: 4

TEXT BOOKS:

13. Microprocessor architecture, programming and application with 8085 – R. Gaonkar (Penram International) (strongly recommended)
14. The 8051 microcontroller - K. Ayala (Thomson)
15. Microprocessors & interfacing – D. V. Hall (Tata McGraw-hill)
16. Ray & Bhurchandi, Advanced Microprocessors & Peripherals, TMH
17. The 8051 microcontroller and Embedded systems - Mazidi, Mazidi and McKinley (PEARSON)
18. An Introduction to Microprocessor and Applications –Krishna Kant (Macmillan)

References:

Microprocessors and microcontrollers - N. Senthil Kumar, M. Saravanan and Jeevananthan (Oxford university press).

8086 Microprocessor –K Ayala (Cengage learning)

Microprocessors – The 8086/8088, 80186/80386/80486 and the Pentium family – N. B. Bahadure (PHI). The 8051 microcontrollers – Uma Rao and Andhe Pallavi (PEARSON).

Learning outcome:

On completion of this course, students are expected to be capable of understanding the history and need of microprocessor, the internal architecture details, instruction sets, their timing diagram and various addressing modes of 8085/8086 microprocessor and 8051 microcontroller. They will also learn the basic concept of serial and parallel data communication of 8085. Students become able to understand various Interrupts and their uses using 8085/8086 Microprocessor and 8051 Microcontroller. Students will also learn to interface 8255/8253/8251 peripheral chips and I/O devices with the same processors and controller. A basic introductory concept on PIC microcontroller also developed through this course. It is expected that students will be able to design systems based on above mentioned processors and controller by means of efficient assembly language programmings.

CONTROL SYSTEMS
Code: EC503
Contact: 3L
Credits: 3

Module – I:
a) INTRODUCTION

Concepts of Control Systems- Open Loop and closed loop control systems and their differences- Different examples of control systems- Classification of control systems, Feed-Back Characteristics, Effects of feedback. Mathematical models – Differential equations, Impulse Response and transfer functions - Translational and Rotational mechanical systems [4L]

Module – I:
b) TRANSFER FUNCTION REPRESENTATION

Transfer Function of linear systems, Block diagram representation of systems considering electrical systems as examples -Block diagram algebra – Representation by Signal flow graph - Reduction using mason's gain formula. [5L]

Module – II:
a) TIME RESPONSE ANALYSIS

Standard test signals - Time response of first order systems – Characteristic Equation of Feedback control systems, Transient response of second order systems - Time domain specifications – Steady state response - Steady state errors and error constants. [5L]

b) STABILITY ANALYSIS IN S-DOMAIN

The concept of stability – Routh's stability criterion – limitations of Routh's stability.
Root Locus Technique: The root locus concept - construction of root loci-effects of adding poles and zeros to G(s)H(s) on the root loci.[5L]

Module – III:
a) FREQUENCY RESPONSE ANALYSIS

Introduction, Frequency domain specifications-Bode diagrams-Determination of Frequency domain specifications and transfer function from the Bode Diagram-Phase margin and Gain margin-Stability Analysis from Bode Plots. [6L]

b) : STABILITY ANALYSIS IN FREQUENCY DOMAIN

Polar Plots, Nyquist Plots Stability Analysis. [4L]

Module - IV :
a) CLASSICAL CONTROL DESIGN TECHNIQUES

Compensation techniques – Lag, Lead, Lead-Lag Controllers design in frequency Domain, PID Controllers. [5L]

b) STATE SPACE ANALYSIS OF CONTINUOUS SYSTEMS

Concepts of state, state variables and state model, derivation of state models from block diagrams, Diagonalization- Solving the Time invariant state Equations- State Transition Matrix and it's Properties – Concepts of Controllability and Observability [6L]

TEXT BOOKS:

1. Automatic Control Systems 8th edition– by B. C. Kuo 2003– John Wiley and son's.,
2. Control Systems Engineering – by I. J. Nagrath and M. Gopal, New Age International (P) Limited, Publishers, 2nd edition.

REFERENCE BOOKS:

1. Modern Control Engineering – by Katsuhiko Ogata – Prentice Hall of India Pvt. Ltd., 3rd edition, 1998.
2. Control Systems Engg. by NISE 3rd Edition – John Wiley

Syllabus for B.Tech(ECE) Second

Revised Syllabus of B.Tech ECE (for the students who were admitted in Academic Session 2010-

Computer Architecture
Code: EC504A
Contact: 3L + 1T
Credits: 4

Pre-requisite: Basic Electronics in First year, Introduction to Computing in second semester, Digital Electronic & Integrated Circuits in 4th semester.

Module 1: Computer Organization & Architecture, Basic functional Unit, Computer component structure [Eg. Structure of IAS Computer, IBM Machine configuration], Harvard & Von Neumann architecture, BUS architecture, ALU designs [combinational ALU & sequential ALU], Instruction set: Instruction format & types. [8L]
[**Learning Outcome**: Students will come to know about basic of computer organization & architecture]

Module 2: Memory Organization: Memory system overview, Cache memory organizations, Techniques for reducing cache misses; Hierarchical memory technology: Inclusion, Coherence and locality properties; Virtual memory organization, mapping and management techniques, memory replacement policies [10L]
[**Learning Outcome**: Students will come to know about basic of computer memory structure & different mapping technique]

Module 3: CPU Organization: Fundamentals, Processor-memory communication [Clock cycles and Timing Diagram], Instruction cycle, RISC & CISC based architecture. [4L]
[**Learning Outcome**: Students will come to know about different CPU architecture & Processor-memory communication technique]

Module 4: Pipelining: Basic concepts, instruction and arithmetic pipeline, data hazards, control hazards and structural hazards, techniques for handling hazards, Flynn's classification –SISD, SIMD, MISD, MIMD architectures, Pipeline optimization techniques. [7L]
[**Learning Outcome**: Students will come to know about pipelining architecture]

Module 5: Instruction-level parallelism: basic concepts, techniques for increasing ILP, superscalar, super pipelined and VLIW processor architectures, Array and Vector processors. [6L]
[**Learning Outcome**: Students will come to know about parallelism]

Module 6: Overview of HDL: VHDL basics programming concept, Structural, dataflow, behavioural & mixed style modeling techniques. [3L]
[**Learning Outcome**: Students will come to know about VHDL programming techniques]

[**Overall Learning Outcome**: This course is a formidable prerequisite for the course Operating System, Embedded System to be offered in the subsequent semester.]

Text & Reference books:

1. William Stallings —" Computer Organization & Architecture Designing for performance" , 8/e , Pearson
2. Carl Hamacher, Zvonko Vranesic, Safwat Zaky —"Computer Organization", 5/e, MGH
3. Mano M.M—"Computer System Architecture", 3/e,Pearson
4. Kai Hwang & Naresh Jotwani-- " Advanced Computer Architecture Parallelism, Scalability,Programmability",2/e, MGH
5. Pedroni---"Circuit Design And Simulation With VHDL", 2/e, PHI

Data Structure & C
Code: EC504B
Contact: 3L + 1T
Credits: 4

Pre-requisites: *CS 201 (Basic Computation and Principles of C), M101 & M201 (Mathematics), basics of set theory*

Module -I. [8L] Linear Data Structure
Introduction (2L):
Why we need data structure?
Concepts of data structures: a) Data and data structure b) Abstract Data Type and Data Type.
Algorithms and programs, basic idea of pseudo-code.
Algorithm efficiency and analysis, time and space analysis of algorithms – order notations.
Array (2L):
Different representations – row major, column major.
Sparse matrix - its implementation and usage. Array representation of polynomials.
Linked List (4L):
Singly linked list, circular linked list, doubly linked list, linked list representation of polynomial and applications.

Module -II: [7L] Linear Data Structure
[Stack and Queue (5L):
Stack and its implementations (using array, using linked list), applications.
Queue, circular queue, dequeue. Implementation of queue- both linear and circular (using array, using linked list), applications.
Recursion (2L):
Principles of recursion – use of stack, differences between recursion and iteration, tail recursion.
Applications - The Tower of Hanoi, Eight Queens Puzzle.

Module -III. [15L] Nonlinear Data structures

Trees (9L):

Basic terminologies, forest, tree representation (using array, using linked list).

Binary trees - binary tree traversal (pre-, in-, post- order), threaded binary tree (left, right, full) - non-recursive traversal algorithms using threaded binary tree, expression tree.

Binary search tree- operations (creation, insertion, deletion, searching).

Height balanced binary tree – AVL tree (insertion, deletion with examples only). B-

Trees – operations (insertion, deletion with examples only).

Graphs (6L):

Graph definitions and concepts (directed/undirected graph, weighted/un-weighted edges, sub-graph, degree, cut-vertex/articulation point, pendant node, clique, complete graph, connected components – strongly connected component, weakly connected component, path, shortest path, isomorphism).

Graph representations/storage implementations – adjacency matrix, adjacency list, adjacency multi-list.

Graph traversal and connectivity – Depth-first search (DFS), Breadth-first search (BFS) – concepts of edges used in DFS and BFS (tree-edge, back- edge, cross-edge, forward-edge), applications.

Minimal spanning tree – Prim's algorithm (basic idea of greedy methods).

Module - IV. Searching, Sorting (10L):

Sorting Algorithms (5L): Bubble sort and its optimizations, insertion sort, shell sort, selection sort, merge sort, quick sort, heap sort (concept of max heap, application – priority queue), radix sort.

Searching (2L): Sequential search, binary search, interpolation search.

Hashing (3L): Hashing functions, collision resolution techniques.

Recommended books:

19. "Data Structures And Program Design In C", 2/E by Robert L. Kruse, Bruce P. Leung.
20. "Fundamentals of Data Structures of C" by Ellis Horowitz, Sartaj Sahni, Susan Anderson-freed.
21. "Data Structures in C" by Aaron M. Tenenbaum.
22. **"**Data Structures" by S. Lipschutz.
23. "Data Structures Using C" by Reema Thareja.
24. "Data Structure Using C", 2/e by A.K. Rath, A. K. Jagadev.
25. **"**Introduction to Algorithms" by Thomas H. Cormen, Charles E. Leiserson, Ronald L. Rivest, Clifford Stein.

Learning outcome:

Ideally this course should act as a primer/pre-requisite for CS 503 (Design and Analysis of Algorithms). On completion of this course, students are expected to be capable of understanding the data structures, their advantages and drawbacks, **how to implement them in C**, how their drawbacks can be overcome and **what the applications are** and **where they can be used**. Students should be able to learn about the data structures/ methods/algorithms mentioned in the course with a comparative perspective so as to make use of the most appropriate data structure/ method/algorithm in a program to enhance the efficiency (i.e. reduce the run-time) or for better memory utilization, based on the priority of the implementation. Detailed time analysis of the graph algorithms and sorting methods are expected to be covered in CS 503 but it is expected that the students will be able to understand at least the efficiency aspects of the graph and sorting algorithms covered in this course. The students should be able to convert an inefficient program into an efficient one using the knowledge gathered from this course.

Practical

Analog Communication Lab
Code: EC591
Contact: 3P
Credits: 2

1. Measurement of modulation index of an AM signal.
2. measurement of output power with varying modulation index an AM signal(for both DSB- & SSB).
3. Measurement of distortion of the demodulated output with varying modulation index of an AM signal (for both DSB-SC & SSB).
4. Measurement of power of different frequency components of a frequency modulated signal & the measurement of the bandwidth.
5. Design a PLL using VCO & to measure the lock frequency.
6. Design a FM demodulator using PLL.
7. Measurement of SNR of a RF amplifier.
8. Measurement of selectivity ,sensitivity,fiedility of a superhetrodyne receiver.
9. Study of waveforms of various functional points (output of RF,IF & video) of a B/W TV receiver.
10. Study of the vertical & horizontal sweep of the time base unit of a B/W TV.
11. One innovative experiment.

Microprocessors & Microcontrollers Lab
Code:EC-592
Contact: 3P
Credits: 2

Sl. No.	Name of the Experiments	No.of hours
c)	Study of prewritten programs on trainer kit using the basic instruction set (data transfer, Load/Store, Arithmetic, Logical) Assignments based on above.	**3**
d)	a) Familiarization with 8085 & 8051simulator on PC. Study of prewritten programs using basic instruction set (data transfer, Load/Store, Arithmetic, Logical) on the simulator. Assignments based on above	**3**

e)	**Programming using kit and simulator for:** i) Table look up	**6**

	ii) Copying a block of memory iii) Shifting a block of memory iv) Packing and unpacking of BCD numbers v) Addition of BCD numbers vi) Binary to ASCII conversion vii) String Matching, Multiplication using shift and add method and Booth's Algorithm	
f)	Program using subroutine calls and IN/OUT instructions using 8255 PPI on the trainer kit e.g. subroutine for delay, reading switch state and glowing LEDs accordingly.	**3**
g)	**:Study of timing diagram of an instruction on oscilloscope..**	**3**
h)	Interfacing of 8255**: Keyboard and Multi-digit Display with multiplexing using 8255**	**6**
i)	Study of 8051 Micro controller kit and writing programs as mentioned in S/L3. Write programs to interface of Keyboard, DAC and ADC using the kit.	**3**
j)	Serial communication between two trainer kits	**3**

Total 30 hours (10 classes each of 3 periods)

Control System Lab
Code: EC583 Contact:
3P Credits: 2

Sl.No.	Name of the Experiment	Periods
4.	Familiarization with MATLAB Control System tool Box, MATLAB- SIMULINK tool box & pSPICE.	3
5.	Determination of step response for 1st order & 2nd order system with amity feedback on CRO & calculation of control system specifications for variations of system design.	3
6.	Simulation of step response & impulse response for Type-I & Type-II system with unity feedback using MATLAB & pSPICE.	3
7.	Determination of root locus, Bode-plot, Nyquist Plot, using MATLAB control system toolbox for a given 2nd order transfer function & determination of different control system specifications.	6
8.	Determination of PI, PD, and PID controller action on 1st order simulated process.	3
9.	Determination of approximate transfer function experimentally using Bode Plot.	3
10.	Evaluation of steady-state error, setting time, percentage peak overshoots, gain margin, phase margin with addition of lead compensator in forward path transfer functions using MATLAB & pSPICE.	3
11.	Study of position control system using servomotor.	3
12.	Design and hardware implementation of a temperature controller using microprocessor/microcontroller.	6

Total 33 hours (11 classes each of 3 periods)

Computer Architecture Lab
Code: EC594A
Contact: 3P
Credits: 2

All laboratory assignments are based on Hardware Description Language (VHDL or Verilog) Simulation.
[**Pre-requisite:** The hardware based design has been done in the Digital Electronic & Integrated Circuits in 4th semester.]

HDL introduction
Basic digital logic base programming with HDL 8-bit
Addition, Multiplication, Division
8-bit Register design
Memory unit design and perform memory operations. 2-
bit, 4-bit, 8-bit simple ALU design
8-bit simple CPU design Interfacing
of CPU and Memory

Data Structure & C Lab
Code: EC594B
Contact: 3P
Credits: 2
Experiments should include but not limited to :

Implementation of array operations:

Stacks and Queues: adding, deleting elements Circular Queue: Adding & deleting elements Merging Problem :

Syllabus for B.Tech(ECE) Second

Revised Syllabus of B.Tech ECE (for the students who were admitted in Academic Session 2010-

Evaluation of expressions operations on Multiple stacks & queues :

Implementation of linked lists: inserting, deleting, inverting a linked list. Implementation of stacks & queues

using linked lists:
Polynomial addition, Polynomial multiplication

Sparse Matrices : Multiplication, addition.

Recursive and Nonrecursive traversal of Trees

Threaded binary tree traversal. AVL tree implementation

Application of Trees. Application of sorting and searching algorithms

Hash tables implementation: searching, inserting and deleting, searching & sorting techniques.

(Detailed instructions for Laboratory Manual to follow for further guidance. The details will be uploaded in the website from time to time)

SEMESTER - VI

Theory

Principles of Management HU-601
Contracts: 2L
Credits- 2

Module-I

1. Basic concepts of management: Definition – Essence, Functions, Roles, Level.
2. Functions of Management: Planning – Concept, Nature, Types, Analysis, Management by objectives; Organisation Structure – Concept, Structure, Principles, Centralization, Decentralization, Span of Management; Organisational Effectiveness.

Module-II

3. Management and Society – Concept, External Environment, CSR, Corporate Governance, Ethical Standards.
4. People Management – Overview, Job design, Recruitment & Selection, Training & Development, Stress Management.
5. Managerial Competencies – Communication, Motivation, Team Effectiveness, Conflict Management, Creativity, Entrepreneurship.

Module-III

6. Leadership: Concept, Nature, Styles.
7. Decision making: Concept, Nature, Process, Tools & techniques.
8. Economic, Financial & Quantitative Analysis – Production, Markets, National Income Accounting, Financial Function & Goals, Financial Statement & Ratio Analysis, Quantitative Methods – Statistical Interference, Forecasting, Regression Analysis, Statistical Quality Control.

Module-IV

9. Customer Management – Market Planning & Research, Marketing Mix, Advertising & Brand Management.
10. Operations & Technology Management – Production & Operations Management, Logistics & Supply Chain Management, TQM, Kaizen & Six Sigma, MIS.

Readings:

1. Management: Principles, Processes & Practices – Bhat, A & Kumar, A (OUP).
2. Essentials for Management – Koontz, Revised edition, Tata McGraw Hill (TMH)
3. Management – Stoner, James A. F. (Pearson)
4.Management - Ghuman, Tata McGraw Hill(TMH)

Digital Communication EC-601
Contracts: 3L
Credits- 3
MODULE – I:
Probability Theory and Random Processes:

Conditional probability, communication example, joint probability, statistical independence, random variable-continuous and discrete, cumulative distribution function, probability density function – Gaussian, Rayleigh and Rician, mean, variance, random process, stationary and ergodic

processes, correlation coefficient, covariance, auto correlation function and its properties, random binary wave, power spectral density. 6L

MODULE – II:

Signal Vector Representation:

Analogy between signal and vector, distinguishibility of signal, orthogonality and orthonormality, basis function, orthogonal signal space, message point , signal constellation, geometric interpretation of signals, likelihood functions, Schwartz inequality, Gram-Schmidt orthogonalization procedure, response of the noisy signal at the receiver, maximum likelihood decision rule, decision boundary, optimum correlation receiver; probability of error , error function, complementary error function, Type-I and Type-II errors. 6L

MODULE – III:

Digital Data Transmission:

Concept of sampling, Pulse Amplitude Modulation (PAM), interlacing and multiplexing of samples, Pulse Code Modulation (PCM), quantization, uniform and non-uniform quantization, quantization noise, binary encoding, A-Law and μ -law companding, differential PCM, delta modulation and adaptive delta modulation.

Digital transmission components, source, multiplexer, line coder, regenerative repeater, concept of line coding – polar/unipolar/bipolar NRZ and RZ, Manchester, differential encoding and their PSDs, pulse shaping, Inter Symbol Interference (ISI), Eye pattern, Nyquist criterion for zero ISI, equalizer, zero forcing equalizer, timing extraction. 10L

MODULE –IV:

Digital Modulation Techniques:

Types of Digital Modulation, coherent and non-coherent Binary Modulation Techniques, basic digital carrier modulation techniques: ASK, FSK and PSK,

Coherent Binary Phase Shift Keying (BPSK), geometrical representation of BPSK signal; error probability of BPSK, generation and detection of BPSK Signal, power spectrum of BPSK.

Concept of M-ary Communication, M-ary phase shift keying, the average probability of symbol error for coherent M-ary PSK, power spectra of MPSK, Quadrature Phase Shift Keying (QPSK), error probability of QPSK signal, generation and detection of QPSK signals, power spectra of QPSK signals, Offset Quadrature Phase shift Queuing (OQPSK),

Coherent Frequency Shift Keying (FSK), Binary FSK, error probability of BFSK signals, generation and detection of Coherent Binary FSK signals, power spectra of BFSK signal,

Minimum Shift Keying (MSK), signal constellation of MSK waveforms, error probability of MSK signal, Gaussian Minimum Shift Keying: GMSK, basic concept of OFDM, constellation diagram,

Some performance issues for different digital modulation techniques - Error Vector Magnitude (EVM), Eye Pattern and Relative Constellation Error (RCE),

Conceptual idea for Vector Signal Analyzer (VSA) 14L

TEXT BOOKS:

k) Digital Communications, S. Haykin, Wiley India.
l) Principles of Communication Systems, H. Taub and D.L.Schilling, TMH Publishing Co.
m) Wireless Communication and Networks : 3G and Beyond, I. Saha Misra, TMH Education.
n) Digital Communications, J.G.Proakis, TMH Publishing Co.

o) REFERENCE BOOKS:

d) Digital Communications Fundamentals and Applications, B. Sklar and P.K.Ray, Pearson.
e) Modern Digital and Analog Communication Systems, B.P.Lathi and Z.Ding, Oxford University Press.
f) Digital Communication, A. Bhattacharya, TMH Publishing Co.

Digital Signal Processing EC-602

Contracts: 3L

Credits- 3

MODULE – I:

Discrete-time signals:

Concept of discrete-time signal, basic idea of sampling and reconstruction of signal, sampling theorem, sequences – periodic, energy, power, unit- sample, unit-step, unit-ramp, real & complex exponentials, arithmetic operations on sequences. 3L

LTI Systems:

Definition, representation, impulse response, derivation for the output sequence, concept of convolution, graphical, analytical and overlap-add methods to compute convolution supported with examples and exercises, properties of convolution, interconnections of LTI systems with physical interpretations, stability and causality conditions, recursive and non-recursive systems. 6L

MODULE –II:

Z-Transform:

Definition, mapping between s-plane and z-plane, unit circle, convergence and ROC, properties of Z-transform, Z-transform on sequences with examples and exercises, characteristic families of signals along with ROCs, convolution, correlation and multiplication using Z-transform, initial value theorem, Perseval's relation, inverse Z-transform by contour integration, power series & partial-fraction expansions with examples and exercises. 6L

Discrete Fourier Transform:

Concept and relations for DFT/IDFT, Twiddle factors and their properties, computational burden on direct DFT, DFT/IDFT as linear transformations, DFT/IDFT matrices, computation of DFT/IDFT by matrix method, multiplication of DFTs, circular convolution, computation of circular convolution by graphical, DFT/IDFT and matrix methods, linear filtering using DFT, aliasing error, filtering of long data sequences – Overlap-Save and Overlap- Add methods with examples and exercises. 5L

Fast Fourier Transform:
Radix-2 algorithm, decimation-in-time, decimation-in-frequency algorithms, signal flow graphs, Butterflies, computations in one place, bit reversal, examples for DIT & DIF FFT Butterfly computations and exercises. 4L

MODULE – III:

Filter Design:
Basic concepts of IIR and FIR filters, difference equations, design of Butterworth IIR analog filter using impulse invariant and bilinear transforms, design of linear phase FIR filters, no. of taps, rectangular, Hamming and Blackman windows. 5L

MODULE – IV:

Digital Signal Processor:
Elementary idea about the architecture and important instruction sets of TMS320C 5416/6713 processor, writing of small programs in Assembly Language. 4L

FPGA:
Architecture, different sub-systems, design flow for DSP system design, mapping of DSP algorithms onto FPGA. 3L

TEXT BOOKS:

1. Digital Signal Processing – Principles, Algorithms and Applications, J.G.Proakis & D.G.Manolakis, Pearson Ed.
2. Digital Signal processing – A Computer Based Approach, S.K.Mitra, TMH Publishing Co.
3. Digital Signal Processing Signals, Systems and Filters, A. Antoniou, TMH Publishing Co.
4. VLSI Digital Signal Processing Systems Design and Implementation, Wiley International Publication.
5. Digital Signal Processing with Field Programmable Gate Arrays, U.Meyer-Baese, Springer.

REFERENCE BOOKS:

13. Digital Signal Processing, P. Rameshbabu, Scitech Publications (India).
14. Digital Signal Processing, S.Salivahanan, A.Vallabraj & C. Gnanapriya, TMH Publishing Co.
15. Digital Signal Processing; A Hands on Approach, C. Schuler & M.Chugani, TMH Publishing Co.
16. Digital Signal Processing, A. Nagoor Kani, TMH Education
17. Digital Signal Processing S. Poornachandra & B. Sasikala, MH Education
18. Digital Signal Processing; Spectral Computation and Filter Design Chi-Tsong Chen, Oxford University Press
19. Texas Instruments DSP Processor user manuals and application notes.
20. Xilinx FPGA user manuals and application notes.

Telecommunication System EC-603
Contracts: 3L Credits- 3

Module No.	(to be modified as per workshop decision) Topic	Periods/Classes
1.	**Introduction to Telephone Systems:** Evolution of Telecommunication; Components and Examples of Telecommunication systems; Pulse dialing & Tone dialing; Telephone Instruments -rotary dial and push button types.	3
2.	**Telecommunication Transmission Lines:**- Copper, Co-axial, and Fiber optic cables; Transmission Bridge - Hybrid circuit for 2-wire to 4-wire conversion and vice versa. PCM Carriers; American and European standards of carrier channels.	6
3.	**Subscriber Loop Systems**: BORSCHT Functions; Switching hierarchy & routing, signaling techniques-in channel & common channel signaling, SS7.	4
4.	**Switching System**: Electro-mechanical switching-Strowger & Crossbar; Circuit Switching & Packet Switching, Digital Switching systems - Time division Time switch, Time multiplexed Space switch, Time multiplexed Time switch, Hybrid switching, ; TS, ST, STS, TST systems; Architecture of 5ESS systems;	6
5.	**Stored Program Control**: Software architecture, Application software;. Electronic Exchanges, Introduction to cordless telephones and Digital PABX	4
6.	**Traffic Engineering**: Blocking network, blocking probability, grade of service, traffic load, Erlang-B and C-congestion formulas-case studies	4
7.	**Modems and Their Standards**: RS 232C; DTE and DCE, Facsimile Transmission, Broad band transmission- ISDN, DSL and ADSL, ISDN and B-ISDN	4
8.	**IP Telephony**: Voice over IP, Session initiation protocol, H.323 signaling, IP multimedia service	4

TOTAL LECTURE HOURS: 35

Text Books:

b) T. Viswanathan, " Telecommunications Switching Systems & Networks", PHI
c) J.C.Bellamy "Digital Telephony"- Wiley-India

Reference Books:

1. O Hersent, D Gurle, J P Petit "IP Telephony" Pearson
2. J.E.Flood "Telecommunications Switching, Traffic and Networks" Pearson
3. R L Freeman "Telecommunication System Engineering"- Wiley-India
4. A Gokhale "Introduction to Telecommunication"- Cengage Learning

Professional Elective

Antenna Theory & Propagation EC-604A
Contracts: 3L Credits- 3

Module-I	**A.** Review of Maxwell's Equation; Radiation of e.m waves and introducing Antenna; Vector Potential and Retarded Vector Potential; Radiation fields of a Hertzian dipole(electric); Duality Principle, Radiation fields due to short magnetic dipole.	**7**
Module- II	B. Antenna Characteristics: Radiation Pattern, Beam Width; Radiation Resistance and efficiency; Directivity and Gain; Impedance, VSWR, Polarization; Effective height and Receive Aperture; Noise Temperature of Antenna. A. Radiation fields and Characteristics of λ/2 dipole; discussion on λ/4 monopole antenna; Current distribution and Radiation patterns of center-fed dipoles of length λ, 3λ/2 and 2 λ. Horizontal and Vertical antennas over a plane ground. **B.** Antenna Arrays: electric Field due to 2 element arrays, 3 element Arrays; Pattern Multiplication; Uniform Linear Array: End fire and Broad side; Phased array.	**9**
Module- III	A. Characteristics and properties of :Travelling Wave Antenna, Helical Antenna, Folded Dipole, Yagi-Uda Array, Loop Antenna, Electrically Short Antennas, Broad Band Antenna (Log periodic Antenna), Microstrip Patch Antenna. B. Radiation from an aperture: Sectoral and Pyramidal Horn Antennas, Design of Optimum Horn Antenna; Parabolic and Corner Reflectors and feed systems. [Major stress on Characteristics features, applications (including frequency at which used), advantages and disadvantages, major design principles and equations (without long and detailed derivations]	**10**
Module- IV	A. Methods of Propagation: Ground Wave Propagation, Components of ground wave, Field strength dependence on physical factors. Sky wave Propagation; Ionospheric Layers; Virtual Height, Critical Frequency, MUF, Skip distance, Sporadic Reflections. Space wave propagation: Tropospheric Scatter, Ducting Super refraction, Sub refraction. **B.** Friss Transmission Formula, SNR of a Radio Link. Physical (Medium) effects on Radio wave Propagation: Absorption, Refraction and Radio Horizon, Diffraction, Multipath Propagation and fading, Noise, Doppler effect.	**10**

Recommended (Text Books)

1. Antenna (for all application), John D. Kraus and Ronald J. Marhcfka; Tata- MacGraw Hill, 3rd Edition
2. Antenna & Wave Propagation, K.D Prasad; Satya Prakashan, New Delhi, 3rd Edition
3. Antenna Theory: Analysis & Design, Constantine A. Balanis; Willey, 3rd Edition

Reference Book

1. Elements of Electromagnetics; Matthew N.O. Sadiku; Oxford University Press; 5th Edition (2010)
2. Electromagnetic Waves & Radiating Systems, EC Jordan & K.G. Balmain; Pearson Education, 2nd Edition (2009)
3. Microstrip Antenna Design Handbook- Ramesh Garg; Artech House (2001)

Information Theory & Coding
EC604B
Contracts: 3L
Credits- 3

Source Coding [7L]
Uncertainty and information, average mutual information and entropy, information measures for continuous random variables, source coding theorem, Huffman codes.

Channel Capacity And Coding [7L]
Channel models, channel capacity, channel coding, information capacity theorem, The Shannon limit.

Linear And Block Codes For Error Correction [8L]
Matrix description of linear block codes, equivalent codes, parity check matrix, decoding of a linear block code, perfect codes, Hamming codes.

Cyclic Codes [7L]
Polynomials, division algorithm for polynomials, a method for generating cyclic codes, matrix description of cyclic codes, Golay codes.

BCH Codes [8L]
Primitive elements, minimal polynomials, generator polynomials in terms of minimal polynomials, examples of BCH codes.

Convolutional Codes [8L]

Tree codes, trellis codes, polynomial description of convolutional codes, distance notions for convolutional codes, the generating function, matrix representation of convolutional codes, decoding of convolutional codes, distance and performance bounds for convolutional codes, examples of convolutional codes, Turbo codes, Turbo decoding.

Books

4. Information theory, coding and cryptography - Ranjan Bose; TMH.
5. Information and Coding - N Abramson; McGraw Hill.
6. Introduction to Information Theory - M Mansurpur; McGraw Hill.
7. Information Theory - R B Ash; Prentice Hall.
8. ***Error Control Coding - Shu Lin and D J Costello Jr; Prentice Hall.***

Free Elective

Object Oriented Programming
Code: EC605A
Contact: 3L
Credits: 3
Object oriented design [10 L]
Concepts of object oriented programming language, Major and minor elements, Object, Class, relationships among objects, aggregation, links, relationships among classes-association, aggregation, using, instantiation, meta-class, grouping constructs.

Object oriented concepts [4 L]
Difference between OOP and other conventional programming – advantages and disadvantages. Class, object, message passing, inheritance, encapsulation, polymorphism

Basic concepts of object oriented programming using Java [22 L]
Implementation of Object oriented concepts using Java.
Language features to be covered:
Class & Object properties [6L]
Basic concepts of java programming – advantages of java, byte-code & JVM, data types, access specifiers, operators, control statements & loops, array, creation of class, object, constructor, finalize and garbage collection, use of method overloading, this keyword, use of objects as parameter & methods returning objects, call by value & call by reference, static variables & methods, garbage collection, nested & inner classes, basic string handling concepts-String (discuss charAt() , compareTo(), equals(), equalsIgnoreCase(), indexOf(), length() , substring(), toCharArray() , toLowerCase(), toString(), toUpperCase() , trim() , valueOf() methods) & StringBuffer classes (discuss append(), capacity(), charAt(), delete(), deleteCharAt(), ensureCapacity(), getChars(), indexOf(), insert(), length(), setCharAt(), setLength(), substring(), toString() methods), concept of mutable and immutable string, command line arguments, basics of I/O operations – keyboard input using BufferedReader & Scanner classes.

Reusability properties[6L] – Super class & subclasses including multilevel hierarchy, process of constructor calling in inheritance, use of super and final keywords with super() method, dynamic method dispatch, use of abstract classes & methods, interfaces. Creation of packages, importing packages, member access for packages.

Exception handling & Multithreading [6L] – Exception handling basics, different types of exception classes, use of try & catch with throw, throws & finally, creation of user defined exception classes.
Basics of multithreading, main thread, thread life cycle, creation of multiple threads, thread priorities, thread synchronization, inter-thread communication, deadlocks for threads, suspending & resuming threads.

Applet Programming (using swing) [4L] – Basics of applet programming, applet life cycle, difference between application & applet programming, parameter passing in applets, concept of delegation event model and listener, I/O in applets, use of repaint(), getDocumentBase(), getCodeBase() methods, layout manager (basic concept), creation of buttons (JButton class only) & text fields.

Textbooks/References:
1. Rambaugh, James Michael, Blaha – "Object Oriented Modelling and Design" – Prentice Hall, India
2. Ali Bahrami – "Object Oriented System Development" – Mc Graw Hill
3. Patrick Naughton, Herbert Schildt – "The complete reference-Java2" – TMH
4. R.K Das – "Core Java For Beginners" – VIKAS PUBLISHING
5. Deitel and Deitel – "Java How to Program" – 6th Ed. – Pearson
6. Ivor Horton's Beginning Java 2 SDK – Wrox
7. E. Balagurusamy – " Programming With Java: A Primer" – 3rd Ed. – TMH

Programming Languages
Code: EC605B
Contacts: 3L
Credits: 3

Introduction [3L]
Programming paradigms,Language translator, **B**asics of OOP, Structure of C++ program, Class and object, Abstraction and encapsulation, Polymorphism, Inheritance, Static and dynamic binding.

Declaration, Expression and statements [4L]
Data types, Variables, Constants, Operator and expression, Operator precedence and associativity. Statements: Labelled, Expression, Compound, Control, Jump, Declaration, Try-throw-catch.

Array, pointer and function [4L]
Array,Addresses, Pointer. Function: Declaration, Definition and call, Inline function, Main function argument, Reference variable, Function overloading, Default argument, Parameter passing, Recursion, Scope of variable, Return-by-value and Return-by-reference, Pointer to function

Data abstraction through classes and user defined data types [6L]
Class, Members, Constructor and destructor, Copy constructor.
Dynamic memory management: Operators new and delete, Malloc and free, Static member, Scope of class names, Scope of variables.

Operator Overloading [5L]
Overloading unary and binary operator, Overloaded function calls, Subscripting, class member access, Non-member operator, New and delete, Cast operator.

Class relationships [6L]
Introduction, Polymorphism, Coercion, Overloading, Parametric and inclusion polymorphism
Inheritance: direct and indirect superclasses, Multiple inheritance, Virtual base class,Friend, Virtual function, Abstract class, Overriding and hiding, Dynamic binding of functions, Virtual destructor and operators.

Template and Exception Handling [5L]
Class template, Member function inclusion, Function template, Specialization,Inheritance, Namespace.
Concept of exception handling, Catch block, Nested try-catch block, Condition expression in throw expression, Constructor & destructor, Runtime standard exception

Standard Library in C++ [3L]
Standard library function, Input and output, Iostream class hierarchy, Class ios, Other stream classes.

Object oriented design and modelling [4L]
Software development, Qualities of software system, Software architecture, Process life cycle, phases, Modularity, OO methodology, Modeling, UML overview, Object oriented design patterns.

Textbooks/References:

1. Schildt, H., *The Complete Reference C++*, McGraw – Hill.
2. C++ object oriented programming paradigm, Debasish Jana, PHI
3. Pooley, R and P. Stevens, *Using UML* , Addison-Wesley.
4. Programming In C++, Y.I. Shah and M.H. Thaker, ISTE/EXCEL BOOKS
5. Rambaugh, James Michael, Blaha – "Object Oriented Modelling and Design" – Prentice Hall, India
6. Rajaram: Object Oriented Programming and C++, New Age International

ELECTRONIC MEASUREMENT AND INSTRUMENTATION
Code: EC605C
Contact: 3L
Credits: 3

Module	Topic	Hrs
Module I	**Basic Measurement Concepts:** Measurement systems – Static and Dynamic Characteristics – Units and Standards of measurements, –errors analysis, – moving iron meters, dynamometer, wattmeter– multimeter, – True rms meters– Bridge measurements, Wheatstone Bridge, Kelvin, Wein, Maxwell, Hay, Schering and Anderson Bridges.	6
Module II	**Basic Measurement Concepts:** Electronic Multimeter Current measurement with analog electronic instruments. Chopper stabilized amplifier for measurement of very low voltage and currents. Cathode Ray Oscilloscopes- Block Schematic, Principles and applications. Dual Trace and Dual Beam Oscilloscopes, Digital Storage Oscilloscopes	**7**
Module III	**Signal Generator and Analysis** Function Generators- RF Signal Generators- Sweep Generators – Frequency Synthesizer-Wave Analyzer- Harmonic Distortion Analyzer – Spectrum Analyzer	**7**
Module IV	**Digital Instruments** Comparison of analog & digital techniques- digital voltmeter- mutlimeter – frequency counters- measurement of frequency and time interval – extension of frequency range- measurement errors.	7
Module V	**Data Acquisition Systems** Elements of digital data acquisition system- interfacing of transducers –multiplexing – computer controlled instrumentation : IEEE 488 Bos. Optical Power Measurement, Optical Time Domain Reflectometer.	**7**
		Total Lecture Hours 34

Books:

9. Modern Electronic Instrumentation & Measurement Techniques – Albert D. Helfrick & William D. Copper, Prentice Hall of India, 2003
10. Elements of Electornics Instrumentation & Measurement, Pearson Education 2003
11. Measurement System- Application & Design – Ernest O.Doeblin, Tata McGraw Hill 2004

Practical

Digital Communication Lab
Code: EC691
Contact: 3P
Credits: 2

c) Design, implementation and study of all the properties of 7-length and 15-length pn sequences using shift register.
d) Study of PAM and demodulation.
e) Study of PCM and demodulation.
f) Study of line coders: polar/unipolar/bipolar NRZ ,RZ and Manchester.
g) Study of delta modulator and demodulator.
h) Study of adaptive delta modulator and demodulator.
i) Study of BPSK modulator and demodulator.
j) Study of BFSK modulator and demodulator.
k) Study of ASK modulator and demodulator.
l) Study of QPSK modulator and demodulator.
m) Simulation study of probability of symbol error for BPSK modulation.
n) Simulation study of probability of symbol error for BFSK modulation.

Digital Signal Processing Lab
Code: EC692
Contact: 3P
Credits: 2

Simulation Laboratory using standard Simulator:

1. Sampled sinusoidal signal, various sequences and different arithmetic operations.
2. Convolution of two sequences using graphical methods and using commands- verification of the properties of convolution.
3. Z-transform of various sequences – verification of the properties of Z-transform.
4. Twiddle factors – verification of the properties.
5. DFTs / IDFTs using matrix multiplication and also using commands.
6. Circular convolution of two sequences using graphical methods and using commands, differentiation between linear and circular convolutions.
7. Verifications of the different algorithms associated with filtering of long data sequences and Overlap –add and Overlap-save methods.
8. Butterworth filter design with different set of parameters.
9. FIR filter design using rectangular, Hamming and Blackman windows.

Hardware Laboratory using either 5416 or 6713 Processor and Xilinx FPGA:

1. Writing & execution of small programs related to arithmetic operations and convolution using Assembly Language of TMS320C 5416/6713 Processor, study of MAC instruction.

2. Writing of small programs in VHDL and downloading onto Xilinx FPGA.
3. Mapping of some DSP algorithms onto FPGA.

Object Oriented Programming Laboratory
EC695A
L-0, T-0, P-3;
Cr 2

1. Assignments on class, constructor, overloading, inheritance, overriding
2. Assignments on wrapper class, arrays
3. Assignments on developing interfaces- multiple inheritance, extending interfaces
4. Assignments on creating and accessing packages
5. Assignments on multithreaded programming
6. Assignments on applet programming

Note: Use Java for programming
Preferably download "**java_ee_sdk-6u4-jdk7-windows.exe**" from
http://www.oracle.com/technetwork/java/javaee/downloads/java-ee-sdk-6u3-jdk-7u1-downloads-523391.html

Programming Language Laboratory:
EC695B
l-0, t-0, p-3
Cr 3

To be uploaded later.

ELECTRONIC MEASUREMENT AND INSTRUMENTATION
Code: EC695C
Contact: 3P
Credits: 2

1. Study of Static Characteristics of a Measuring Instrument

2. Study of Dynamic Characteristics of a Measuring Instrument
3. Acquaintance with basic structure of DMM and measurement of different electrical parameters
4. Realization of Data Acquisition system
5. Wave and spectrum analysis using Q meter
6. Realization of a V-to-I & I-to-V converter.
7. Statistical analysis of errors in measurement .
8. Study of VCO (Voltage controlled oscillator) & PLL (Phase Locked Loop).

Proposed

Syllabus VIII Semester

WIRELESS COMMUNICATION AND NETWORKS EC701
Contacts: 3L Credits: 3

Theory

MODULE – I:

Cellular Mobile Wireless Networks: Systems and Design Fundamentals:

Brief introduction to mobile wireless communication and systems, Description of cellular system, Cellular Structure, Frequency Reuse, Cell clustering, Capacity enhancement techniques for cellular networks, cell splitting, antenna sectoring, Co-channel and Adjacent channel interferences, Channel assignment schemes – Fixed channel, Dynamic channel and Hybrid channel, mobility management – location management and handoff management, handoff process, different types of handoff. 6L

Characteristics of wireless channel and propagation path loss models:

Different Multi-path propagation mechanisms, Multi-path effects on mobile communication, Fading, different types of fading, small and large scale fading, slow and fast fading, narrowband and wideband fading, Inter symbol interference, fast fading model, Doppler effect due to velocity of mobiles, Rayleigh envelop, free space propagation model, two ray ground reflection model, log distance path loss model, log normal shadowing model, macro and micro cell propagation models, types of base stations and mobile station antennas. 6L

MODULE – II:

Modern Mobile Wireless Communication Systems

Evolution strategies – First Generation (1G) to Fourth Generation (4G), Personal Area Networks :PAN, Low Tier Wireless System: Cordless Telephone, Second Generation (CT2), Digital European Cordless Telecommunications (DECT), Public wide-area Wireless Networks: 1 G to 3G cellular networks 2L

Multiple Access Technologies in cellular communication

Time division multiple access (TDMA), narrowband and wideband TDMA, synchronous and asynchronous TDMA, Frequency division multiple access (FDMA), Code Division Multiple Access (CDMA), Direct-sequence CDMA, spread spectrum technique, spectral efficiency of different wireless access technologies: Spectral Efficiency in FDMA system, Spectral Efficiency in TDMA system, Spectral Efficiency for DS-CDMA system 3L

Cellular Communication Networks and Systems

Second generation (2G) Network: Global system for mobile communication (GSM): Architecture and Protocols Air Interface, GSM spectrum, GSM Multiple Access Scheme, GSM Channel Organization, Traffic Channel multi-frame, Control (Signaling) Channel Multi-frame, Frames, Multi-frames, Super- frames and

Hyper-frames, GSM Call Set up Procedure, Location Update Procedure, Routing of a call to a Mobile Subscriber 3L

The concept of packet data services The 2.5 G General Packet Radio Services: GPRS Networks Architecture, GPRS Interfaces and Reference Points, GPRS Mobility Management Procedures, GPRS Attachment and Detachment Procedures, Session Management and PDP Context, Data Transfer through GPRS Network and Routing, The IP Internetworking Model 3L

Overview of CDMA systems: IS-95 Networks and 3G – The Universal Mobile Telecommunication System (UMTS) CDMA based IS-95 Systems, forward link and reverse link for IS-95, handoff process in CDMA based IS-95 network. UMTS Network Architecture –Release 99, UMTS Interfaces, UMTS Network Evolution UMTS Release 4 and 5, UMTS FDD and TDD, UMTS Channels, Logical Channels, UMTS Time Slots 3L

MODULE – III:

Wireless Local Area Networks (WLAN): IEEE 802.11 Standards and Protocols

IEEE 802.11 standards, WLAN family, WLAN transmission technology, WLAN system architecture, Collision Sense Multiple Access with Collision Detection (CSMA/CD) and CSMA collision avoidance (CSMA/CA), Frequency Hopping Spread Spectra, 802.11 PHY and MAC layers, IEEE 802.11 Distributed Coordination function (DCF) and Point coordination function (PCF), Back off algorithm, Virtual carrier sense, MAC frame format. Security and QoS issues, WLAN applications 4L

Wireless Broadband Networks and Access

Evolution of broadband wireless, IEEE 802.16 standards : **WiMAX** , Spectrum Allocation, IEEE 802.16 Standard Architecture, Overview of WiMAX PHY, IEEE 802.16 MAC Layer, IEEE 802.16 Scheduling Services, Unsolicited Grant Service (UGS), Real-time Polling Service (rtPS), Non-real- time Polling Service (nrtPS), Best Effort (BE) Overview of 3G Long Term Evolution (3G LTE) for broadband wireless communication, Orthogonal Frequency Division Multiple Access (OFDMA) 3L

MODULE – IV:

Mobile Internet Protocol

Basic Mobile IP, Mobile IP Type-MIPV4 and MIPv6, Mobile IP: Concept, Four basic entities for MIPv4, Mobile IPv4 Operations, Registration, Tunneling, MIPv4 Reverse Tunneling, MIPv4 Triangular Routing, Configuring PDP Addresses on Mobile Station, Mobility Classification, Seamless Terminal Mobility Management, Limitations of current TCP/IP networks for mobility support, Mobility solution, Accessing External PDN through GPRS/UMTS PS Domain, Transparent Access, Use of Mobile IP for Non-transparent access, Dynamically accesses IP address from External Network. 3L

TEXT BOOKS:

1. Wireless Networks: Applications and Protocols,
   T. S. Rappaport, Pearson Education
2. Wireless Communication and Networks : 3G and Beyond,
   I. Saha Misra, TMH Education.
3. Wireless Communications : Principles and Practice,
   T.S.Rappaport, PHI Learning.
4. Wireless Communications,
   A. Goldsmith, Cambridge University Press.

REFERENCE BOOKS:

1. Lee's Essentials of Wireless Communications,
   MH Prof. Med/Tech
2. Wireless Digital Communications: Modulations and Spread Spectrum Applications,
   K. Feher, Prentice Hall.
3. Wireless Communications and Networking,
   J.W.Mark and W. Zhuang, PHI.

Microelectronics & VLSI Designs
EC702
Contacts: 3L
Credits: 3

Pre-requisite: Knowledge about MOS, MOS-Characteristics, MOS Capacitors, Short Channel MOS, CMOS inverters, MOS Gates etc done in ES201 (Basic Electronics of second semester), EC302 (solid state devices of third semester), Analog Circuit Theory and Digital Circuits done in semesters 3 & 4 respectively.

Module 1: Introduction to VLSI Design: [6L]

VLSI Design Concepts, Moor's Law, Scale of Integration (SSI, MSI, LSI, VLSI, ULSI – basic idea only), Types of VLSI Chips (Analog & Digital VLSI chips, General purpose, ASIC, PLA, FPGA)(2L), Design principles (Digital VLSI – Concept of

Regularity, Granularity etc), Design Domains (Behavioral, Structu12L);

Module 2: Micro-electronic Processes for VLSI Fabrication: **[10]**
Silicon Semiconductor Technology- An
Overview, Wafer processig (1L), Oxidation, Epitaxial deposition, Ion-implantation & Diffusion (1L),
Cleaning, Etching (1L), Photo-lithography – Positive & Negative photo-resist
(1L); Basic CMOS Technology – (Steps in fabricating CMOS (1L)), Basic n-well CMOS process, p-well CMOS process, Twin tub process (1L), Silicon on insulator
(1L); Layout Design Rule: Stick diagram with examples (2L), Layout rules (1L).

Module – 3: CMOS for Digital VLSI Circuits: [10]
Recapitulation of MOS (2L); CMOS, CMOS inverter characteristics (1L); CMOS logic circuits, NAND & NOR Gates (1L), Complex logic circuits (1L), CMOS Full Adder (1L), CMOS Transmission GATE (1L), Advanced CMOS Logic circuits; Sequential CMOS logic circuits (1L); SR Latch circuit, clocked JK Latch/ Master-Slave JK (1L), CMOS D-latch & Edge triggered flip-flop (1L);

Module – 4: Analog VLSI Circuits: [8L]
Analog VLSI design steps (1L); Basic building blocks of Analog VLSI chips (1L); MOS switch (1L); Active load / resistors; Voltage dividers (1L); CMOS Current source & sink; CMOS Voltage references/voltage dividers [Basic circuits only] (1L); CMOS Differential amplifier; Output amplifiers [Basic circuits only] (1L); CMOS OPAMP (1L); Switched capacitor filter (1L)

Text Books:
1. Digital Integrated Circuit, J.M.Rabaey, Chandrasan, Nicolic, Pearson Education.
2. CMOS Digital Integrated Circuit, S.M.Kang & Y.Leblebici, TMH.
3. Modern VLSI Design, Wayne Wolf, Pearson Education.
4. VHDL, Bhaskar, PHI.
5. Advance Digital Design Using Verilog , Michel D. Celliti, PHI

References:
1. Digital Integrated Circuits, Demassa & Ciccone, John Willey & Sons .
2. Modern VLSI Design: system on silicon, Wayne Wolf; Addison Wesley Longman Publisher
3. Basic VLSI Design, Douglas A. Pucknell & Kamran Eshranghian, PHI
4. CMOS Circuit Design, Layout & Simulation, R.J.Baker, H.W.Lee, D.E. Boyee, PHI
5. CMOS Analog Circuit Design by P.E. Allen & D.R. Holberg; OUP

RF & Microwave Engg
EC703A
Contacts: 3L
Credits: 3

Total Lectures: 39 periods (minimum) :

Module	Topics	Hours
1	**26. Introduction** RF & Microwave Spectrum, Typical applications of RF and Microwave, Safety considerations.	1
	27. Microwave Waveguide and Waveguide Resonator Rectangular Waveguide- Design consideration, TE & TM modes, TE_{10} mode analysis, cut-off frequency, propagation constant, intrinsic wave impedance, phase and group velocity, power transmission, attenuation, waveguide excitation, wall current; Introduction of circular waveguide; Rectangular waveguide resonator- Design consideration, resonant frequency, Q-factor, excitation.	6
	28. Planar Transmission line Micro-strip lines, Coplanar waveguide, Slot line-design consideration, field patterns, propagation characteristics, Comparison for different characteristics of the above mentioned lines.	3
2	**4.High frequency Circuit Elements:** Difference in High frequency and relatively low frequency behavior of Lumped circuit components. Miniaturization and Design of Lumped components at High RF. Realization of reactive elements as Waveguide and Planar Circuit components.	4

	5.Waveguide Passive Components and their S-matrix Representation N-port networks-Properties of S matrix, Transmission matrix & their relationships; Microwave passive components and their S matrix representation: Attenuators, Phase shifter, Directional coupler, Bethe-hole coupler, Magic tee, hybrid ring, Circulators, Isolators; Design procedure of filter (maximally flat and equal ripple) using insertion loss method-specification, low-pass prototype design, scaling and conversion, implementation.	**8**
3	**6.Microwave Tubes** Electron beam & Field interaction for energy exchange in resonant (two cavity klystron, Reflex Klystron, Magnetron) and non-resonant (TWT &BWO) microwave active devices: Typical characteristics & applications (only physical explanation is required, no mathematical derivation required).	**4**
	7.Semiconductor Microwave devices TED (Gunn diode) & Avalanche Transit Time (IMPATT) device, Schottky diode, PIN diode-characteristics & applications; Microwave bipolar transistor, Microwave field effect transistor(MESFET).	**5**
	8.Microwave Amplifier Design Basic consideration in the design of RF amplifier- Transistor S-parameter, Stability, matching network, noise figure; Matching network design using lumped elements and L-Section. Brief introduction to NBA, LNA.	**4**
4	**9.Typical Microwave Test Bench & measurement** VSWR meter, Tunable detector, Slotted line and Probe detector, Frequency meter, Network analyzer, Measurement of VSWR – low, medium and high, Measurement of power: low, medium and high, Frequency measurement.	**4**

Text Books:

1. Microwave Engineering, 3Rd Ed David M. Pozar, Willey & Sons Inc.
2. Microwaves, K C Gupta, New Age Publishers.
3. Microwave Engineering, A Das & S Das, TMH.
4. Microwave Devices & Circuits, SY Liao , Pearson Education /PHI

References Books:

(5) Microwave Engineering-Passive Circuits, PA Rizzi , Pearson Education.
(6) Foundation of Microwave Engineering, 2ed edition, Robert E Collin, McGraw Hill, Inc.
(7) Microwave Devices & Circuit Design , GP Srivastava & VL Gupta, PHI

Optical Communication & N/W
EC703B
Contacts: 3L
Credits: 3

Introduction to communication systems: [2]
Principles, components; Different forms of communications in brief, advantages of optical fibre communication, spectral characteristics.

Optical Fibre wave guide: [2]
Structure, Single and Multimode operation; Attenuation, Material and wave guide dispersion.

Optical Sources: [5]
Light Emitting Diode; principle, structures, power and efficiency, coupling to fibres. Laser diodes; principle, double heterostructure, gain and index guiding, distributed lasers. Quantum Well Lasers; Modes and narrow linewidth lasers.
Modulation; Bandwidth for modulation, Optical transmitters: components.

Optical Detectors: [2]
Device types, optical detection principles, efficiency, responsivity, bandwidth. Preamplifiers; noise sources, signal to noise ratio.

Point-to-point link and Wavelength Division Multiplexing: [11]
Building blocks; Multiplexing; Intensity Modulation/Direct Detection system; Principle of Regeneration; WDM link, Optical amplifiers; EDFA, SOA, Raman amplifier, Fabry-Perot filters. Dispersion compensation and management, Link analysis and Bit-Error-Rate calculation.

Optical Network: [4]
LAN, MAN, WAN; Topologies: bus, star, ring; Ethernet; FDDI; Telecom networking:SDH/SONET.
Different forms of access networks: [4]
Telephony; ISDN; Cable TV; Broadcast and Switched Networks; HFC networks; FTTC and FTTH

networks; All optical networks.

Books:

1. Optical Networks – A practical perspective : Rajiv Ramaswami, K. N. Sivarajan, Galen H. Sasaki (Morgan-Kaufman)
2. Optical Fibre Communication : John M. Senior (Pearson)
3. Optical Fibre Communication : Gerd Kaiser (TMH)
4. Optical Communication Systems : John Gawar (PHI)

Computer Networks
EC703C
Contacts: 3L
Credits: 3

Module I
Overview of Data Communication and Networking: [4L]
Introduction; Data communications: components, data representation (ASCII,ISO etc.), direction of data flow (simplex, half duplex, full duplex); network criteria, physical structure (type of connection, topology), categories of network (LAN, MAN,WAN); Internet: brief history, Protocols and standards; Reference models: OSI reference model, TCP/IP reference model, their comparative study.
Physical Level: [6L]
Overview of data(analog & digital), signal(analog & digital), transmission (analog & digital) & transmission media (guided & unguided); Circuit switching: time division & space division switch, TDM bus; Telephone Network;
Module II
Data link Layer: [5L]
Types of errors, framing(character and bit stuffing), error detection & correction methods; Flow control; Protocols: Stop & wait ARQ, Go-Back- N ARQ, Selective repeat ARQ, HDLC;
Medium Access sub layer: [5L]
Point to Point Protocol, LCP, NCP, Token Ring; Reservation, Polling, Multiple access protocols: Pure ALOHA, Slotted ALOHA, CSMA, CSMA/CD, CSMA/CA Traditional Ethernet, fast Ethernet(in brief);
Module III Network
layer: [8L]
Internetworking & devices: Repeaters, Hubs, Bridges, Switches, Router, Gateway; Addressing : IP addressing, subnetting; Routing : techniques, static vs. dynamic routing , Unicast Routing Protocols: RIP, OSPF, BGP; Other Procols: ARP, IP, ICMP, IPV6;.
Transport layer: [4L]
Process to Process delivery; UDP; TCP; Congestion Control: Open Loop, Closed Loop choke packets; Quality of service: techniques to improve QoS: Leaky bucket algorithm, Token bucket algorithm,
Module IV Application
Layer [5L]
Introduction to DNS, SMTP, SNMP, FTP, HTTP & WWW; Security: Cryptography (Public, Private Key based), Digital Signature, Firewalls.
Modern topics: [5L]
ISDN services & ATM, DSL technology, Cable Modem: Architecture & Operation in brief
Wireless LAN: IEEE 802.11, Introduction to blue-tooth.
Text Books:
1. B. A. Forouzan – "Data Communications and Networking (3rd Ed.) " – TMH
2. A. S. Tanenbaum – "Computer Networks (4th Ed.)" – Pearson Education/PHI
3. W. Stallings – "Data and Computer Communications (5th Ed.)" – PHI/ Pearson Education
4. Zheng & Akhtar, Network for Computer Scientists & Engineers, OUP
5. Black, Data & Computer Communication, PHI
6. Miller, data Communication & Network, Vikas
7. Miller, Digital & Data Communication, Jaico
8. Shay, Understanding Data Communication & Network, Vikas
Reference Books:
1. Kurose and Rose – " Computer Networking -A top down approach featuring the internet" – Pearson Education
2. Leon, Garica, Widjaja – "Communication Networks" – TMH
3. Walrand – "Communication Networks" – TMH.
4. Comer – "Internetworking with TCP/IP, vol. 1, 2, 3(4th Ed.)" – Pearson Education/PHI

FPGA & Reconfigurable Computing
EC703D
Contacts: 3L
Credits: 3

Module –I: Introduction to Reconfigurable Computing (RC)
History, State-of-the-Art and Future Trends, Computing requirements as Power, Area and VLSI scaling, Mapping of Algorithm- analysis and speed-up, RC architectures- Fine Grain and Coarse Grain, Hybrid and Embedded Architectures, Supercomputers.
5L
Module-II: Reconfigurable Logic Devices:
FPGA and its internal architecture, computing elements, LUT, BRAM, interconnects, I/O Blocks, programming of FPGA and

interfacing case study, ALU design, designing with embedded processors, introduction to Power PC and ARM processors. 6L

Module III: Hardware Description Language for RC:
Design cycle, algorithms, Hardware Description Language, VHDL, different design styles: data flow, structural and behavioral and practical logic circuit implementation example on FPGA, debugging, writing test bench, High level synthesis and Low level synthesis. 6L

Module IV: RC Configuration:
Application segmentation and Resource partitioning, spatial and temporal configuration, systolic architectures and algorithms, Bit serial, on the fly, multiplexing vs. run-time reconfiguration 4L

Module V: RC Implementation:
Virtual Hardware Components (VHC) design process, high level synthesis of VHC and optimization, VHC data-path and control unit design, simulation and verification of VHC, determination of reconfigurable scheme and associated loading mechanisms (temporal and spatial partitioning) for RC. 6L

Module VI: RC applications:
RC for DSP, DSP application building blocks, RC for Image processing, Bioinformatics and Network Security 5L

Text Books:

1. M. Gokhale and P. Graham; Reconfigurable Computing: Accelerating Computation with FPGAs, Springer, 2005
2. C. Maxfield ; The design Warrior's Guide to FPGAs: Devices, Tools and Flows, Newnes, 2004
3. C. Bobda, Introduction to Reconfigurable Computing : Architectures, Algorithm and Applications, Springer, 2005

Reference Books:

1. W. Wolf , FPGA Based Systems Design, PHI, 2004
2. P. Lysagt and W. Rosenstiel, New Algorithms, Architectures and Applications for Reconfigurable Computing, Springer, 2005

Radar Engineering
EC704A
Contacts: 3L
Credits: 3

Module –I: Introduction to Radar
Historical background, radar terminology, radar band designations, Radar block diagram, radar equation: detection of signals in noise and signal-to-noise ratio, Probabilities of detection & False alarm, integration of radar pulses, radar cross section, distributed targets, Transmitted power, pulse-repetition frequency, antenna parameters & system losses, introduction to radar clutter. 6L

Module – II: Radar Types
Pulse radars and CW radars,Advantages of coherent radar, Doppler radar and MTI: Doppler effect, delay-line cancellers, blind speeds, staggered PRFs, Digital filter bank, Moving Target Detector, limitations of MTI, tracking with radar, monopulse tracking, conical scan, limitation to tracking accuracy, 8L

Module –III: Radar signals & clutter
Basic radar measurement, theoretical accuracy of radar measurements, Range and velocity ambiguities, the ambiguity diagram, pulse compression-principles, the matched filter, chirp waveforms, Waveform design: nonlinear FM, phase codes, waveform generation and compression
Descriptions of land & sea clutter, statistical models for surface clutter, detection of targets in clutter. 10L

Module –IV: Devices and Radar Systems
Radar transmitter: Solid-state RF power source, Magnetron, other RF power sources, Radar receiver: Super heterodyne receiver, receiver noise figure, duplexers & diplexers, Receiver protectors, Applications: Electronic Warfare: ESM, ECM, ECCM; super resolution, IFM, types of jammers, Stealth and counter-stealth: stealth techniques for aircraft and other target types, low frequency and UWB radar ,System design examples 8L

Text Books :
1. Introduction to Radar Systems-3/E , M. I. Skolnik, Tata McGrawhill

2. Principles of Modern radar system , M. H. Carpentier, Artech House

Reference Books:

1. Fundamentals of radar signal processing, M. I. Richards, McGraw-Hill
2. Handbook of radar measurement , Barton, David & Ward, H. R, Artech House
3. Radar Technology , Brookner, Eli, Artech House
4. Radar Handbook , ed. M. I. Skolnik, Mc-Graw Hill, 1990
5. Skolnik, M. I, "Fifty years of Radar", Proc. IEEE, vol. 73 (Feb. 1985), pp. 182-197

Embedded Systems
EC704B
Contacts: 3L
Credits: 3

Introduction to Embedded System : Embedded system Vs General computing systems, History of Embedded systems, Purpose of Embedded systems, Microprocessor and Microcontroller, Hardware architecture of the real time systems. [5]

Devices and Communication Buses: I/o types, serial and parallel communication devices, wireless communication devices, timer and counting devices, watchdog timer, real time clock, serial bus communication protocols, parallel communication network using ISA, PCI, PCT-X, Intrnet embedded system network protocols, USB, Bluetooth. [10]

Program Modelling Concepts ; Fundamental issues in Hardware software co-design, Unified Modelling Language(UML), Hardware Software trade-offs DFG model, state machine programming model, model for multiprocessor system. [5]

Real Time Operating Systems : Operating system basics, Tasks, Process and Threads, Multiprocessing and multitasking, task communication, task synchronization, qualities of good RTOS. [8]

Examples of Embedded System : Mobile phones, RFID, WISENET, Robotics, Biomedical Applications, Brain machine interface etc. Popular microcontrollers used in embedded systems, sensors, actuators. [6]

Programming concepts and embedded programming in C, C^{++}, JAVA. [4]

Ref:

1. Introduction to Embedded Systems : Shibu K. V. (TMH)
2. Embedded System Design – A unified hardware and software introduction: F. Vahid (John Wiley)
3. Embedded Systems : Rajkamal (TMH)
4. Embedded Systems : L. B. Das (Pearson)
5. Embedded System design : S. Heath (Elsevier)
6. Embedded microcontroller and processor design: G. Osborn (Pearson)

Biomedical Instrumentation
EC704C
Contacts: 3L
Credits: 3

Module -1 (Fundamentals)

Introduction to Physiological Systems –Organism, Cardiovascular, Respiratory, Renal, Hepatic, Gastrointestinal, Endocrinal, Nervous, Muscular, Cellular [2]

Biological Signals – Bioelectric events, Biomechanical Systems, Cellular & Membrane phenomenon. The Action Potential and Propagation through Nervous System. The Peripheral Nervous Systems and sensory mechanisms. Biomaterials. [2]

Fundamentals of Electrophysiology –EKG, EEG, EMG, Evoked potentials. Quantification of Biological Signals[2]

Module 2 (Measurement & Analysis)

Biological Sensors- Bio-electrodes, Biosensors and Transducers for Cardiology, Neurology, Pulmonary, Oxygen saturation & gaseous exchange, flow measurement, goniometry, Endoscopy, Impedance Plethysmography. [3]

Biological Amplifiers –Instrumentation Amplifiers for Electrophysiology (ECG, EMG, EEG, EOG), Filters, Power Supplies. [3]

Recording and Display systems, Digital Conversion for storage, Electrical Hazards in measurements, Isolation Circuits, calibration, alarms & Multi-channel re-constitution [2]

Hospital requirements – Multi-parameter bed-side monitors, Central Nursing Stations, Defibrillators, Ventilators, Catheters, Incubators. [2]

Module - 3 (Life-Support & Treatment)

Cardiac Support: Implantable & programmable Pacemakers, External & Internal Defibrillators, Coronary Angiography.

[2]

Electro-physiotherapy : Shortwave & ultrasonic diathermy, Transcutaneous Nerve Stimulators in pain relief, Traction Systems,

Ultrasound in bone fracture regeneration, hypothermia & hyperthermia systems. [3]
3.3 Lasers in treatment and surgery : Opthalmic, Ablators, Endoscopic [2]
3.4 Assists and Artificial limbs- Orthoses , passive and powered Prostheses [2]

Module-4 (Imaging)

4.1 Fundamentals of X-Rays, Radiological Imaging, Digital Radiology, DSA. [3]
4.2 Computer Tomography, Image Processing, solid state sensors, whole-body scans. [3]
4.3 Gamma camera & radio- isotope imaging. [1]
4.5 Ultrasonography- Transducers, Signal Conditioners, 2D & 3D scans, Doppler & Colour Doppler [3]
4.6 Fundamentals of Magnetic Resonance Imaging and PET - scans [2]

Text Books:-

2) R S Khandpur:- Handbook of Biomedical Instrumentation (Tata –Mcgraw Hill Education) [Partly Downloadable]
3) M E Valentiniuzzi:- Understanding the Human Machine- A Primer for Bioengineering [Freely Downloadable in PDF] (World Scientific Publishing Co. Pte. Ltd, Singapore)
4) L Cornwell, F.J. Weibell & E.A. Pfeiffer:- Biomedical Instrumentation and Measurements(Prentice Hall/ Medical)
5) J G Webster & J W. Clark:- Medical Instrumentation – Application & Design (Houghton Miffin Pub)
6) J J Carr & JM Brown:- Introduction to Bio-medical Equipment Technology(Regents / Prentice Hall)
7) J Tompkins & J G Webster :-Design of Micro- controller based Medical Instrumentation (Prentice Hall Inc)

Reference Books:

1. W.B. Blesser :- A systems approach to Biomedicine (McGraw Hill.,NY)
2. J H U Brown, J E Jacobs & L Stark:- Biomedical Engineering (Davis Co, Philadelphia, USA)
3. L A Geddes & L E Baker :- Principles of Applied Biomedical Instrumentation (John Wiley & sons, NY)
4. J H Milsum:- Biological Control Systems(Mc Graw Hill, NY)
5. R Plonsey:- Bioelectric Phenomena (McGraw-Hill Co, NY)

Artificial Intelligence
EC705A
Contacts: 3L
Credits: 3

Introduction [2]

Overview of Artificial intelligence- Problems of AI, AI technique, Tic - Tac - Toe problem.

Intelligent Agents [2]

Agents & environment, nature of environment, structure of agents, goal based agents, utility based agents, learning agents.

Problem Solving [2]

Problems, Problem Space & search: Defining the problem as state space search, production system, problem characteristics, issues in the design of search programs.

Search techniques [5]

Solving problems by searching :problem solving agents, searching for solutions; uniform search strategies: breadth first search, depth first search, depth limited search, bidirectional search, comparing uniform search strategies.

Heuristic search strategies [5]

Greedy best-first search, A* search, memory bounded heuristic search: local search algorithms & optimization problems: Hill climbing search, simulated annealing search, local beam search, genetic algorithms; constraint satisfaction problems, local search for constraint satisfaction problems.

Adversarial search [3]

Games, optimal decisions & strategies in games, the minimax search procedure, alpha-beta pruning, additional refinements, iterative deepening.

Knowledge & reasoning [3]

Knowledge representation issues, representation & mapping, approaches to knowledge representation, issues in knowledge

representation.

Using predicate logic [2]

Representing simple fact in logic, representing instant & ISA relationship, computable functions & predicates, resolution, natural deduction.

Representing knowledge using rules [3]

Procedural verses declarative knowledge, logic programming, forward verses backward reasoning, matching, control knowledge.

Probabilistic reasoning [4]

Representing knowledge in an uncertain domain, the semantics of Bayesian networks, Dempster-Shafer theory, Fuzzy sets & fuzzy logics.

Planning [2]

Overview, components of a planning system, Goal stack planning, Hierarchical planning, other planning techniques.

Natural Language processing [2]

Introduction, Syntactic processing, semantic analysis, discourse & pragmatic processing.

Learning [2]

Forms of learning, inductive learning, learning decision trees, explanation based learning, learning using relevance information, neural net learning & genetic learning.

Expert Systems [2]

Representing and using domain knowledge, expert system shells, knowledge acquisition.

Basic knowledge of programming language like Prolog & Lisp. **[6] Books:**

1. Artificial Intelligence, Ritch & Knight, TMH

2. Artificial Intelligence A Modern Approach, Stuart Russel Peter Norvig Pearson

3. Introduction to Artificial Intelligence & Expert Systems, Patterson, PHI

4. Poole, Computational Intelligence, OUP

5. Logic & Prolog Programming, Saroj Kaushik, New Age International

6. Expert Systems, Giarranto, VIKAS

7. Artificial Intelligence, Russel, Pearson

Robotics
EC705B
Contacts: 3L
Credits: 3

Robot Anatomy Arm Geometry-Direct & Inverse Kinematics Problem.Arm Dynamics,D Alembert Equations of Motion, Synthesis of elements with movalulity constraints,manipulations-trajectory planning,joint interpolated trajectories. [15L]

Control of Robot Manipulation-computed torque technique sequencing & adaptive control, resolved motion control Moluie Robots. [6L]

Robot sensing-Range & Proximity & Higher-Level vision, illumination techniques,Imaging Geometry, Segmentation Recognition & Interpretation. [8L]

Robot Programming Language Characteristics of Robot Level & Task Level languages.Robot intelligence-State Space search, Robot

learning,Robot Task Planning,Knowledge Engineering. [10L]

References:

1. K.S Fu R.C . CSG Lee-Robotics Control,Sensing, Vision & Intelligence,McGraw-Hill.
2. M.P. Groover,M.Weins,R.N. Nagel,N.C. Odrey –Industrial Robotics,McGraw Hill
3. Andrew C.Straugard-Robotics & AI,PHI
4. S. Sitharama Iyengar,Alberto Elefes-Autonomous Mobile Robots Control,Planning & Achitecture,IEEE Computer Society Press

Database Management System
EC705C
Contacts: 3L
Credits: 3

Introduction [4L]
Concept & Overview of DBMS, Data Models, Database Languages, Database Administrator, Database Users, Three Schema architecture of DBMS.

Entity-Relationship Model [6L]
Basic concepts, Design Issues, Mapping Constraints, Keys, Entity-Relationship Diagram, Weak Entity Sets, Extended E-R features.

Relational Model [5L]
Structure of relational Databases, Relational Algebra, Relational Calculus, Extended Relational Algebra Operations, Views, Modifications Of the Database.

SQL and Integrity Constraints [8L]
Concept of DDL, DML, DCL. Basic Structure, Set operations, Aggregate Functions, Null Values, Domain Constraints, Referential Integrity Constraints, assertions, views, Nested Subqueries, Database security application development using SQL, Stored procedures and triggers.

Relational Database Design [9L]
Functional Dependency, Different anamolies in designing a Database., Normalization using funtional dependencies, Decomposition, Boyce-Codd Normal Form, 3NF, Nomalization using multi-valued depedencies, 4NF, 5NF

Internals of RDBMS [7L]
Physical data structures, Query optimization : join algorithm, statistics and cost bas optimization. Transaction processing, Concurrency control and Recovery Management : transaction model properties, state serializability, lock base protocols, two phase locking.

File Organization & Index Structures [6L]
File & Record Concept, Placing file records on Disk, Fixed and Variable sized Records, Types of Single-Level Index (primary, secondary, clustering), Multilevel Indexes, Dynamic Multilevel Indexes using B tree and B+ tree .
Text Books:

8. Henry F. Korth and Silberschatz Abraham, “Database System Concepts”, Mc.Graw Hill.
9. Elmasri Ramez and Novathe Shamkant, “Fundamentals of Database Systems”, Benjamin Cummings Publishing. Company.
10. Ramakrishnan: Database Management System , McGraw-Hill
11. Gray Jim and Reuter Address, “Transaction Processing : Concepts and Techniques”, Moragan Kauffman Publishers.
12. Jain: Advanced Database Management System CyberTech
13. Date C. J., “Introduction to Database Management”, Vol. I, II, III, Addison Wesley.
14. Ullman JD., “Principles of Database Systems”, Galgottia Publication.

Reference:

10. James Martin, “Principles of Database Management Systems”, 1985, Prentice Hall of India, New Delhi
11. “Fundamentals of Database Systems”, Ramez Elmasri, Shamkant B.Navathe, Addison Wesley Publishing Edition
12. “Database Management Systems”, Arun K.Majumdar, Pritimay Bhattacharya, Tata McGraw Hill

Power Electronics
EC705D
Contacts: 3L
Credits: 3

Module	Topic	Hrs
Module I	**A dvances in Power Electronics** Power Semiconductor Switches: Rectifier diodes, fast recovery diodes, Schottky barrier diode, Power	6

	BJT, Power MOSFET, SCR, TRIAC, IGBT and GTO. Ratings, Static and Dynamic Characteristics, Trigger, driver and switching-aid circuits and cooling. SCR turn –on and turn - off methods, Triggering circuits, SCR Commutation circuits, SCR Series and Parallel operation, Snubber Circuit.	
Module II	Rectifiers Single phase and three phase controlled Rectifiers with inductive loads, RL load Effect of source inductance- performance parameters .Dual Converters.	6
Module III	Step up and Step down choppers Time ratio control and current limit control, Buck, Boost, Buck Boost and Cuk Converters, Concept of Resonant Switching.	4
Module IV	Single phase and three phase inverters – PWM techniques, Sinusoidal PWM, modified Sinusoidal PWM - multiple PWM Voltage and harmonic Control – Series resonant inverter-Current Sources Inverter.	6
Module V	AC Voltage Controllers, Single phase and three phase Cycloconveters – Power factor control and Matrix Converters.	4
Module VI	**DC and AC Drives** DC Motor Speed control Induction Motor Speed Control Synchronous Motor Speed Control	8
	Total Lecture Hours	**34**

Books:

b) P.C. Sen, Power Electronics
c) M.H. Rashid, Power Electronics, PHI/ Pearson Education
d) C.W. Lander, Power Electronics, McGraw Hill
e) B.K.Bose, Modern Power Electronics, JAICO
f) Mohan, N Undeland, TM & Robbins, WP- Power Electronics, John Wiley & Sons

Practical

Group Discussion
HU781
Contacts: 3
Credits: 2

To be incorporated

VLSI Design Lab
EC792
Contacts: 3
Credits: 2

Laboratory 1. Familiarity with Spice simulation tool (3 Hrs.)

Laboratory 2. Spice Simulation of Inverter , NAND , NOR Gates. (3 Hrs.)

Laboratory 3 Familiarity with EDA tools for VLSI design /FPGA based system design (6 Hrs.)

Laboratory 4. Layouts ,Transistors and tools,. (3 Hrs.)

Laboratory 5. Standars cell Design (3 Hrs.)

Laboratory 6. Design of CMOS XOR/XNOR Gates. (3 Hrs.)

Laboratory 7. Design of CMOS Full adder (3 Hrs.)

Laboratory 8. Design of CMOS Flip flops (R-S ,D , J-K) (3 Hr.s)

Laboratory 10. Design of 8 bit synchronous Counter (3 Hrs.)

Laboratory 11. Design of 8 bit bi-directional register with tri-stated input/output bus (3 Hrs.)

Laboratory 12 Design of a 12 bit CPU with few instructions and implementation and validation on FPGA (15 Hrs.)

1. M.J.S Smith , Application Specific Integrated circuits ,Pearson.
2. P.J Anderson ,The designer's guide to VHDL, Morgan Kaufman , 2nd edition ,2002.
3. W.Wolf , Modern VLSI Design: Systems on silicon , Pearson
4. G.Hatchel and F.Somenzi , logic Synthesis and verification Algorithms,Kluwer,1998

References:

1. http://www-ee.eng.hawaii.edu/~msmith/ASIC/HTML/ASIC.htm#anchor935203
2. J.Bhasker ,A VHDL Primer , BS Publications/Pearson Education.

RF & Microwave Engg Lab
EC793A
Contacts: 3
Credits: 2

Experiments

1. Determination of phase and group velocities in a waveguide carrying TE_{10} Wave from Dispersion diagram [ω-β Plot].
2. Measurement of unknown impedance using shift in minima technique using a waveguide test bench/ Measurement of the susceptance of an inductive and or a capacitive window using shift in minima technique using a waveguide test bench
3. Study of the characteristics of a Reflex Klystron oscillator
4. Study of Gunn-oscillator Characteristics using X-band waveguide test bench.
5. Measurement of coupling factor, Directivity, Insertion loss and Isolation of a Directional coupler using X-band waveguide test bench set up.
6. Scattering matrix of a magic tee / E-plane tee / H-plane tee using waveguide test bench at X-band.
7. Experimental/Simulation Study of filter (LPF, HPF,BPF) response.
8. Measuring of dielectric constant of a material using waveguide test bench at X-band.

Reference Books

1. ML Sisodia & GS Raghuvanshi Basic Microwave Techniques and Laboratory Manual; Wiley Eastern Limited 1987
2. EL Gintzton Microwave Measurements, McGraw-Hill Book Co.
3. M Sucher and J Fox, Handbook of Microwave Measurements, Vol I, Wiley-Interscience Inc.

Optical Communication & N/W Lab
EC793B
Contacts: 3
Credits: 2

Experiment with Optical fibre :
To calculate attenuation constant, bending loss and numerical aperture of optical fibre.
Experiments using LED module : Study of DC characteristics.
I-V characteristics of LED (i) using optical fibre between LED and power meter and (ii) without using optical fibre. P-I characteristics of LED (i) using optical fibre between LED and power meter and (ii) without using optical fibre.
Experiment with fibre Optic analog link :
Input-output characteristics using long optical fibre. Calculation of attenuation per unit length of optical fibre.

Computer Networks lab
EC793C
Contacts: 3
Credits: 2

8) IPC (Message queue)
9) NIC Installation & Configuration (Windows/Linux)
10) Familiarization with
    11) Networking cables (CAT5, UTP)
    12) Connectors (RJ45, T-connector)

13) Hubs, Switches
14) TCP/UDP Socket Programming
15) Multicast & Broadcast Sockets
13. Implementation of a Prototype Multithreaded Server
16) Implementation of
    17) Data Link Layer Flow Control Mechanism (Stop & Wait, Sliding Window)
    18) Data Link Layer Error Detection Mechanism (Cyclic Redundancy Check)
    19) Data Link Layer Error Control Mechanism (Selective Repeat, Go Back N)

FPGA & Reconfigurable Computing
EC793D
Contacts: 3
Credits: 2

1. Implementation of basic logic gates with VHDL on FPGA using different design styles.
2. Implementation of Multiplexers, Priority Encoder, decoder, counters etc. with VHDL on FPGA using different design styles.
3. Design and implementation of 16-bit ALU with VHDL on FPGA and verification by writing a test bench.
4. a) Generation of Filter co-efficient of a LPF using Simulink FDA tool.
   b) Generation of VHDL codes for the LPF by coupling the co-efficient in "a" with Xilinx.
   c) Implementation of the LPF in FPGA using the code in "b".
   d) Testing of the LPF by using the hardware-in-the loop configuration.
5. Design and implementation of a real time user defined Traffic Light Controller using FSM method on an FPGA.
6. Interfacing of LCD display with FPGA and configuration for the scrolling display.

Artificial Intelligence Lab
EC795A
Contacts: 3
Credits: 2

Programming Languages such as PROLOG & LISP

Robotics Lab
EC795B
Contacts: 3
Credits: 2

1. Determination of link parameters of a multi-link robot using Denavit-Hartenberg scheme.
2. Inverse kinematic approach to determine required angular displacements for translation of link-end-points
3. Adaptive position control of a single/two-link robotic manipulator
4. Characterization of an ultrasonic transducer for range measurement applications
5. Segmentation of an image by histogram thresholding
6. Task-planning using pick-up and placement operations
7. Developing motion plan of a robot-cart using real-time A^* algorithm

Database management System Lb
EC795C
Contacts: 3
Credits: 2

Structured Query Language

1. Creating Database
4. Creating a Database
5. Creating a Table
6. Specifying Relational Data Types
7. Specifying Constraints
8. Creating Indexes

2. Table and Record Handling
10. INSERT statement

11. Using SELECT and INSERT together
12. DELETE, UPDATE, TRUNCATE statements
13. DROP, ALTER statements

3. Retrieving Data from a Database

7. The SELECT statement
8. Using the WHERE clause
9. Using Logical Operators in the WHERE clause
10. Using IN, BETWEEN, LIKE , ORDER BY, GROUP BY and HAVING *Clause*
11. Using Aggregate Functions
12. Combining Tables Using JOINS
13. Subqueries

4. Database Management

6. Creating Views
7. Creating Column Aliases
8. Creating Database Users
9. Using GRANT and REVOKE

Cursors in Oracle PL / SQL
Writing Oracle PL / SQL Stored Procedures

Power Electronics Lb
EC795D
Contacts: 3
Credits: 2

List of Experiments:

1. Study of the characteristics of an SCR.
2. Study of the characteristics of a Triac
3. Study of different triggering circuits of an SCR
4. Study of firing circuits suitable for triggering SCR in a single phase full controlled bridge.
5. Study of the operation of a single phase full controlled bridge converter with R and R-L load.
6. Study of performance of single phase half controlled symmetrical and asymmetrical bridge converters.
7. Study of performance of step down chopper with R and R-L load.
8. Study of performance of single phase controlled converter with and without source inductance (simulation)
9. Study of performance of step up and step down chopper with MOSFET, IGBT and GTO as switch (simulation).
10. Study of performance of single phase half controlled symmetrical and asymmetrical bridge converter.(simulation)
11. Study of performance of three phase controlled converter with R & R-L load. (simulation)
12. Study of performance of PWM bridge inverter using MOSFET as switch with R and R-L load.
13. Study of performance of three phase AC controller with R and R-L load (simulation)
14. Study of performance of a Dual converter. (simulation)
15. Study of performance of a Cycloconverter (simulation)

Institute may develop experiments based on the theory taught in addition to experiments mentioned.

. **Reference books:**

1. Fundamental of Power Electronics with MATLAB, Randall Shaffer, Cengage Learning.
2. SPICE for Power electronics and electric power, M.H. Rashid & H.M. Rashid, Taylor & Francis.
3. Power Electronics: Principles and application, Jacob, Cengage Learning
4. Power Electronics, Daniel W. Hart, Tata McGraw Hill Edition.
5. Modeling & Simulation using MATLAB-SIMILINK , S. Jain, Wiley India
6. MATLAB & SIMULINK for Engineers, A.K. Tyagi, Oxford University Press.

VIII Semester
Theory

Organisational Behaviour

HU801A
Contacts: 2L
Credits: 2

1. Organizational Behaviour: Definition, Importance, Historical Background, Fundamental Concepts of OB, Challenges and Opportunities for OB. **[2]**
2. Personality and Attitudes: Meaning of personality, Personality Determinants and Traits, Development of Personality, Types of Attitudes, Job Satisfaction. **[2]**
3. Perception: Definition, Nature and Importance, Factors influencing Perception, Perceptual Selectivity, Link between Perception and Decision Making. **[2]**
4. Motivation: Definition, Theories of Motivation - Maslow's Hierarchy of Needs Theory, McGregor's Theory X & Y, Herzberg's Motivation-Hygiene Theory, Alderfer's ERG Theory, McClelland's Theory of Needs, Vroom's Expectancy Theory. **[4]**
5. Group Behaviour: Characteristics of Group, Types of Groups, Stages of Group Development, Group Decision Making. **[2]**
6. Communication: Communication Process, Direction of Communication, Barriers to Effective Communication. **[2]**
7. Leadership: Definition, Importance, Theories of Leadership Styles. **[2]**
8. Organizational Politics: Definition, Factors contributing to Political Behaviour. **[2]**
9. Conflict Management: Traditional vis-a-vis Modern View of Conflict, Functional and Dysfunctional Conflict, Conflict Process, Negotiation – Bargaining Strategies, Negotiation Process. **[2]**
10. Organizational Design: Various Organizational Structures and their Effects on Human Behaviour, Concepts of Organizational Climate and Organizational Culture. **[4]**

References:

1. Robbins, S. P. & Judge, T.A.: Organizational Behavior, Pearson Education, 15th Edn.
2. Luthans, Fred: Organizational Behavior, McGraw Hill, 12th Edn.
3. Shukla, Madhukar: Understanding Organizations – Organizational Theory & Practice in India, PHI
4. Fincham, R. & Rhodes, P.: Principles of Organizational Behaviour, OUP, 4th Edn.
5. Hersey, P., Blanchard, K.H., Johnson, D.E.- Management of Organizational Behavior Leading Human Resources, PHI, 10th Edn.

Smart Antenna
EC801A
Contacts: 3L
Credits: 3

MODULE –I:

INTRODUCTION:

Antenna Basics, Phased array antenna, power pattern, beam steering, degree of freedom, adaptive antennas, smart antennas - key benefits of smart antenna technology, wide band smart antennas, Propagation Channels

4L

MODULE –II:

SMART ANTENNAS FOR WIRELESS COMMUNICATIONS:

Spatial Processing for Wireless Systems, Key Benefits of Smart Antenna Technology, The Vector Channel Impulse Response and the Spatial Signature, Spatial Processing Receivers, Fixed Beam forming Networks, Switched Beam Systems, Adaptive Antenna Systems, Wideband Smart Antennas, Diversity Techniques, Multiple Input - Multiple Output (MIMO) Communications Systems, MIMO for frequency selective scenarios.

10L

MODULE –III:

ADAPTIVE PROCESSING:

Sample matrix inversion algorithm, unconstrained LMS algorithm, normalized LMS algorithm, Constrained LMS algorithm, Perturbation algorithms, Neural network approach, Adaptive beam space processing, Implementation issues.

8L

MODULE –IV:

DIRECTION OF ARRIVAL ESTIMATION (DOA) METHODS:

Spectral estimation methods, linear prediction method, Maximum entropy method, Maximum likelihood method, Eigen structure methods, MUSIC algorithm – root music and cyclic music algorithm, the ESPRIT algorithm.

8L

MODULE –V:

IMPLEMENTATION OF SMART ANTENNA SYSTEM:

DOA based beam former design using simulation and hardware. Adaptive beam forming implementation using Altera Stratix® series FPGA, QRD RLS Algorithm. CORDIC algorithm.

6L

TEXT BOOKS:

1. Smart Antenna for Wireless Communication , T.S.Rappaport and J.C.Liberti, Prentice Hall, 1999
2. Smart Antennas, L.C.Godra, CRC Press, 2004
3. Adaptive Filter Theory, S. Haykin. Prentice Hall, 1985
4. Introduction to Smart Antennas, C.A.Balanis, Morgan and Claypool, 2007

Digital Image Processing
EC801B
Contacts: 3L
Credits: 3

Objective: The course provides grounding in digital filter and transforms techniques for image processing and feature extraction, and an overview of common heuristic algorithms for Image P r o c e s s i n g . The different representations of digital images, the importance of adequate sampling frequencies and the appearance of artifacts. Also how the important features in an image may be related to significant abstractions from the raw image. Prerequisite: Digital Signal Processing, Signals and Systems.

Module 1
Digital Image Processing Systems:
Introduction to structure of human eye, Image formation in the human eye, Brightness adaptation and discrimination, Image sensing and acquisition, storage, Processing, Communication, Display Image Sampling and quantization, Basic relationships between pixels. [4]

Module 2
Image Transforms (implementation):
Introduction to Fourier transform, DFT and 2-D DFT, Properties of 2-D DFT, FFT, IFFT, Walsh transform, Hadamard transform, Discrete cosine transform, Slant transform, Optimum transform: Karhunen - Loeve (Hotelling) transform. [7].

Module 3
Image Enhancement in the Spatial and Frequency Domain:
Gray level transformations, Histogram processing, Arithmetic and logic operations, Spatial filtering: Introduction, Smoothing and sharpening filters. Frequency domain filters: Homomorphic filtering. [6]

Module 4
Image Data Compression:
Fundamental s, Redundancies: Coding, Interpixel Psycho-visual, fidelity criteria, Image compression models, Error free compression, Lossy compression, Image compression standards: Binary image and Continuous tone Still Image compression standards, V ideo compression standards. [6]

Module 5
Morphological Image Processing:
Introduction, Dilation, Erosion, Opening, closing, Hit -or-miss transformation, Morphological algorithm operations on binary Images, Morphological algorithm operations on gray-scale Images. [6]

Module 6
Image Segmentation, Representation and Description: Detection of discontinuities, Edge linking and Boundary detection, Thresholding Region based segmentation, Image Representation schemes, Boundary descriptors, and Regional descriptors. [7]

Text Books:
1. R.C Gonzalez and R. Woods :-Digital Image Processing, (Indian reprint: Pearson publication, 2001)
2. Anil K. Jain :- Digital Image Processing (Prentice-Hall, India)

Reference Books:
1. W. K. Pratt :- Digital Image Processing, - 2nd Edition, (John Wiley & Sons).
2. B. Chanda & D. Dutta Majumder, Digital Image Processing and Analysis, (Prentice-Hall, India)

3. M. A. Sid-Ahmed :- Image Processing- Theory, Algorithms & Architecture, (McGraw-Hill).

Satellite Communication & Remote Sensing
EC801C
Contacts: 3L
Credits: 3

Historical background, Basic concepts, Freguency allocation for satellite services, orbital & spacecraft problems, comparision of networks and services, modulation techniques used for satellite communication.(2)
Orbits- Two body problem, orbital mechanics, geostationary orbit, change in longitude, orbital maneuvers, orbital transfer, obital perturbations. (2)
Launch Vehicles- principles of Rocket propulsion, powered flight, Lauchvehicles for communication satellite (1)
RF link- noise, the basic RF link, satellite links (up and down) , optimization RF link, intersatellite link, noise temperature, Antenna temperature, overallsystem temperature, propagation factors, rain attenuation model. Tropospheric and Ionospheric EFFECT. (5)
Multiple access- FDMA, TDMA, CDMA techniques, comperision of multiple access techniques, error connecting codes.(5)
Satellite subsystems and satellite link design- AOCS, TT&C , power system, spacecraft antenna, transponder, Friis transmission equation, G/T ratio of earth station. (6)

Remote Sensing:
1. Basic of remote sensing, Electromagnetic Radiation principles, Atmospheric window, Indian satellite sensing satellite system, Active, Passive, ground based andspace based remote sensing. (3)
2. Spatial, spectral, Radiometric and temporal resolution, satellite sensors, detectors and scanning technique, FOV and error sources, Image analysis and Interpretation weather RADAR, LIDAR, acoustic sounding systems, TRMM, AURA-MLS, Megha Tropiques Alitmeter , Scatterometer, Radiometer.(9)
3. Ground based and radio oceulation techniques, spectral response of water, Sea surface temperature, wind spced, colour monitor, clouds andacrosal, water vopor, convective system, Trace gases.(7)

Ref.: 1. Remote Sensing and GIS - B. Bhatta (oxford university press)
Remote sensing of the Environment – J.R. Jenson (Pearson)
Global Navigation satellite systems - B. S. Rao (TMH) Satellite communication – D. Roddy (TMH)
Remote Sensing - R.A. Schowengerdt)Academic press)

Neural Network & Applications
EC802A
Contacts: 3L
Credits: 3

Module-1
Introduction to neural networks: Human brain and models of a neuron, artificial neurons and activation functions; Learning processes: Introduction to Supervised, Unsupervised and Reinforcement Learning, Memory-based learning, Hebbian learning, competitive learning, Boltzman learning, Adaptive Linear Neuron (Adaline); [8L]

Module-2
Single-layer perceptrons: Unconstrained optimization, LMS algorithm, learning curves, perceptrons, convergence theorem, limitations of single-layer perceptrons; Multi-layer perceptrons: Back-propagation algorithm, XOR problem, feature detection, accelerated convergence of back-propagation algorithm, limitations; [8L]

Module-3
Radial Basis function networks: Theorems on separability of patterns, interpolation problem, regularization theory and regularization networks, generalized RBF, approximation properties of RBF, Wavelet Neural Network, comparison of RBF and back-propagation; [6L]

Module-4
Associative Memory Networks: Training Algorithm for Pattern Association-Hebb Rule, Bidirectional Associative Memory, Hopfield Networks- Continuous and Discrete, Hamming Network;
Self- Organizing maps: Feature mapping models, SOM algorithm, learning vector quantization, adaptive vector quantization; Stochastic machines: Statistical mechanics, Markov chains, Simulated annealing, Gibbs sampling, Boltzman machine, Sigmoid belief networks; [10L]

Module-5

Applications: Applications on Digital Image Processing and other related areas, Image Restoration based on Associative Memory, Data Visualization with self organizing feature MAP, Support Vector machines (SVM), SVM based learning. Introduction to MATLAB Programming. [4L]

Text Books:

1) S. N. Sivanandam, S.N. Deepa: Principles of Soft Computing (Wiley India)
2) Satish Kumar: Neural Networks – A Classroom Approach (Mc Graw Hill Ed.)
3) Mohamad H. Hassoun: Fundamentals of Artificial Neural Networks(PHI)
4) James A. Freeman, David M. Skapura: Neural Networks (Pearson)
5) Simon Heykin : Neural Networks – A Comprehensive Foundation (PHI)
6) M. Ananda Rao, J. Srinibas: Neural Networks Algorithms and Applications (Narosa Publ. House)
7) S. Rajsekaran, G.A. Vijaylakshmi Pai: Neural Networks, Fuzzy Logic and Genetic Algorithm

Reference Books:

1) Amit Konar: Artificial Intelligence and Soft Computing (CRC Press, Indian Edition Available)
2) Cloete, Zarunda: Knowledge based Neurocomputing (University Press)
3) Duda, Hart, Stork: Pattern Classification (Wiley)
4) J.S. Jang, C.T. Sun, E. Mizutani: Neuro-Fuzzy and Soft Computing (PHI)
5) Bart Kosko: Neural Network and Fuzzy Systems (PHI)
6) N. K. Bose, P. Liang : Neural Network Fundamentals with Graphs, Algorithms and Applications (TMG)
7) Dan W Patterson, PHI : Introduction to Artificial Intelligence and Expert Systems (PHI)

Material Science & Engineering
EC802B
Contacts: 3L
Credits: 3

Structure of Solids : Atoms and their binding, Bonds, Crystal Systems, Bravais LatticeMiller Indices, Crystalline, Polycrystalline and Amorphous Materials; Metals, Semiconductors and Insulators, Lattice defects-Qualitative ideas of point, line, surface and volume defects. [5]

Dielectric Propertise : Dielectric Polarization and Mechanism- Internal or local field, Dielectric Loss, Temperature and Frequency dependence of dielectric constant, Elementary ideas of Piezoelectrics, Ferroelectrics and Pyroelectric Materials and its Applications. [4]

Magnetic Properties : Elementary ideas of classification of magnetic materials – Diamagnetism, Paragnetism, Ferrognetism, Ferrimagnetism, Magnetic Domains. [2]

Superconductors : Basic concepts of superconductivity, Transition temperature, Meissner effect High-T superconductors, Haed and Soft Materials, SQUID. [3]

Optical properties : Absorption, Emission, Luminescence, Electro-optic and Acousto-optic effects, Photorefractive effects. [3]

Materials for Optical Communication : LED and Laser Materials, Optical Fibre. [3]

Materials for Data Storage : Magnetic Cores, Tapes, Disks, Hard disk, Floppy disk, Magneto-optic devices, Bubble memories, Magnetoelectronic Materials, CD, DVD, CCD. [5]

Materials for Display Devices : CRT, LED, LCD, TFT, Plasma Display. [3]

Advanced Materials : Metallic Glasses, Nanomaterials, etc. [2]

Books:

1. Electrical Engineering Materials – A. J. Dekker (PHI)
2. Material Science and Engineering–A First Course – V. Raghavan (PHI Learning Pvt. Ltd)
3. Principles of Electronic Materials and Devices – S. Kasap (McGraw-Hill)
4. An Introduction to Solid State Physics - Charles Kittel (John Wiley & sons)
5. An Introduction to Electronic Materials for Engineers – W. Kao, Z. Lee and N. Sannes (World Scientific)

Renewable Energy
EC802C
Contacts: 3L
Credits: 3

Classification of Energy Sources (2)

Syllabus for B.Tech(ECE) Second

Revised Syllabus of B.Tech ECE (for the students who were admitted in Academic Session 2010-

Advantages of Non Conventional Energy Sources over Conventional Sources Economics, Impact on Environment
Electricity Generation from Non Conventional Energy Sources:

Solar Energy: (12)
Solar radiation and its Characteristics, Solar Collector: flat Plate, focusing, Solar Energy use for water heating, Solar thermal power generation, Hybrid solar power
Principle of energy conversion in solar cells, Photovoltaics, Different types of PV Cells, Mono-poly crystalline and amorphous Silicon solar cells. Design of PV array. Efficiency and cost of PV systems.
Wind Energy: (7)
Wind as energy source, Design of Wind turbine, Selection of site of Wind farm, characteristics of different types of wind generators used with wind turbines
Hydel Energy: (2)
Electricity generation from micro hydel plants, location, auxiliaries and associated problems. Bio Energy: (4)
Resources and conversion process: bio gas conversion, bio gas plant, bio mass gasifier. co generation Bio diesel; (2)
Sources, usability and advantages over mineral product,
Tidal Energy: Principle, selection of site, Economics and future prospect (2) Wave Energy: Principle , selection of site and future prospect (2) Geo thermal Energy: Principle , location , economics and prospect (2)
Fuel Cells: (5)
Principle of fuel cells, Different types of fuel cells, advantages and limitations
Magneto hydrodynamics energy conversion: (2)
Principle, Economics and environmental aspect of MHD generation

Audio & Speech Processing
EC802D
Contacts: 3L
Credits: 3

Objective: The course p rovides fundamentals in human speech and music analysis, modeling and processing using digital filters and Pattern Recognition techniques, and an overview of Hidden Markov Models for speech encoding . The different representations of digitized human speech, the importance of adequate voiced and unvoiced speech sounds grouped into phonemes, are used along with spectrograms for speech recognition, articulation and understanding. Also covered are - how the d o m i n a n t features o f speech may be analyzed to form significant abstractions for speaker identification and speaker-independent linguistic comprehension. Prerequisites: Audio Systems, Analog Filters, Digital Signal Processing.

Module -1

Introduction : Production and transmission of acoustic signals : articulation of human speech. Acoustic-phonetic structure of Speech and Music : music synthesis and speech synthesis. A history of Voders & Vocoders and early speech recognition methods. [4]

Module -2

Acoustic-Phonetic classification : Phonemes, Auto-spectra. Review of Digital Signal Processing and FFT.
Short-term Spectral Analysis and STFT, the ARPA and DARPA projects, Pattern matching, introduction to Hidden Markov (HMM) Models. Adaptive segmentation of speech. [6]

Module -3

The stochastic parameters of human speech, Gaussian densities and statistical model training, voiced and unvoiced speech, voice-box modeling, resonance. Acoustic travelling waves. Psycho-acoustics, Physiological exploration of periodicity, audio-spectrograms and sonograms, pitch-perception models. [7]

Module -4

Physiology of the ear and hearing mechanism, the Auditory System modeled as a Filter-bank, Gamma-tone and Roex filters,
Spectrum and Complex Cepstrum analysis of speech as perceived by detectors, Automatic Speech Recognition (ASR), Linear Prediction analysis [7]

Module -5

Phonetic and phonemic alphabets, phonological models of ASR, Linear and Dynamic Time-warping, connected word recognition, Statistical sequence recognition and model training in speech pattern recognition, HMM training, Viterbi training, MLP architecture and training, [8]

Module -6

Speech Synthesis and coding, Formant synthesizers, Vocoders, Speech transformation, Speaker verification, Music synthesizers, speech-assisted applications in industry, defence and medicine. [5]

Text Books :

14. B.Gold & N.Morgan :- Speech & Audio Signal Processing -*Processing and Perception of Speech & Music* (Wiley Student edition)

15. L.R. Rabiner & B.H.Juang :- Fundamentals of Speech Recognition (Prentice-Hall Signal Processing series)
16. B.Plannerer : An Introduction to Speech Recognition [Freely downloadable e-Book]

17. F.Mihelic & J.Zibert : Speech Recognition (InTech) [Freely downloadable e-Book]
18. I. Mcloughlin :Applied Speech and Audio Processing with MATLAB examples (Cambridge University Press)

Reference Books :

viii) G. Young :-The Application of Hidden Markov Models in Speech Recognition [freely downloadable e-Book]
ix) M.Grimm & K.Kroschel :-Robust Speech Recognition & Understanding (Intech)[Freely downloadable]
x) L. R.Rabiner & R.W.Schafer : Theory and Applications of Digital Speech Processing (Hewlett-Packard Labs/Pearson Pub)
xi) C. Schmandt :- Voice Communication with Computers-Conversational Systems (Van Norstrand Reinhold Computers Series)
xii) SOUND FORGE software package (SONY) for practice sessions [freely downloadable]

Practical

Design Lab
Contacts: 6L
Credits: 4

Objective: To impart the essential knowledge of electronic circuit design and fault analysis, to enhance hands on experience and to encourage innovativeness.

Modus operandi: The subject will be a sessional subject so that students can employ all their resources in order to excel.

Total 18 designs have been indicated in the syllabus classified in 4 groups. Each student has to complete at least 8 designs in a semester taking two from each group.

At the end of the semester, the student will be interviewed by a panel of examiners, constituted by the head of the department/institution.

Guidelines: Each design given in the syllabus indicates the basis. On this basis, the teacher will prepare an exact design problem with specified parameters and assign to the student.

Objective of the job in brief is also given in the syllabus. As such the teacher can further elaborate or specialize the problem creating enough room for the student to learn and innovate.

If same job is assigned to more than one student/group, it must be with different parameter values.

The students will find their own design solutions with minimum input from the teacher. Of course there can be more than one solution but the student should ultimately know their comparative merits/demerits.

The hardware assembly and testing has to be done only during assigned class hours under general supervision of a teacher. The student must always make a comparative study between the theoretical and measured performance parameters and analyze their causes.

At the end of each job, the student will prepare a report including detail technical specification of his design, circuit diagram, design calculations, theoretical & measured values, graphs, references etc.

Scoring: The total score of 100 will be in two parts, e.g. a) continuous evaluation-60 and b) semester end viva-40.

A full mark of 10 is allotted to each job. At the end of each job, the teacher will evaluate the performance on the basis of initiative, innovativeness, speed and insight. The sum of 6 such evaluations will make the total for continuous evaluation.

At end semester, each student will be interviewed to assess his expertise in various facets of electronic design, and a score out of 40 will be allotted.

A. DISCRETE ANALOG CIRCUITS.

1. Rectifiers.
   (To design a rectifier for a given average output dc voltage and a given load resistance, compare between the theoretical values of V_{dc}, V_{rms}, RF, HD, output regulation, transformer utility factor etc. with the measured values, and thus comprehend the relevance/effect of these various parameters.)
2. DC power supplies regulation and protection circuits.

(To learn designing a series transistor based output regulation circuit, an output current limiting circuit, fold back circuit needed for a given output parameters.)

3. Single stage audio frequency voltage amplifier with BJT for a given A_v, Z_{in} and Z_{out} and maximum symmetrical out put swing.

(To learn basic design principles, different methods of biasing, bias stability, selection of transistor from data manuals and effect of ac coupling on bandwidth.)

4. Single stage audio frequency emitter follower with JFET for a given A_v, Z_{in} and Z_{out} and maximum symmetrical out put swing.

(To learn the design principles and applications of an emitter follower.)

5. Complimentary symmetry power amplifier with pre amplifier, if necessary, for a given out put power to a given load with single ended power supply.

(To learn the distinction of a power amplifier over and above a voltage or current amplifier, its design principles, issues like, efficiency, cross over distortion etc.)

6. RC phase shift Oscillator , Wien Bridge oscillator, Hartley and Colpitt oscillator

(To learn the design of oscillators and measuring the frequency and amplitude of oscillations)

B. OPAMP BASED ANALOG CIRCUITS

1. Inverting and non-inverting amplifier of given dc gain, input impedance and output impedance.

(To learn the basic design, inter relation between the dc gain and input/output impedances, offset balance and the relation between feedback and GBW.)

2. Adder and subtractor.

(To learn the basic design and function of a multi input adder/subtractor (with ac and dc inputs present simultaneously).

3. Comparator/voltage level detector for a given upper threshold level and a given lower threshold level with facility of independent adjustment of hysteresis and center point.

(To learn the design and the technique of independent adjustment of both hysteresis and center point.)

4. Active filters: LP, BP, HP, 1st order, 2nd order.

(To learn the design of a filter and it's inherent phase shifting characteristics.)

5. 555 based monostable and astable of duty cycle below and above 50%. (To learn designing 555 based timer circuits.)

DIGITAL LOGIC CIRCUITS

1. Design and implement a BCD to 7-segment decoder with basic and universal gates.

(To understand clearly the method of writing a truth table, use of K-map, simplifying a logic function and optimum design with

minimum number of ICs and inputs.)

2. Design and implement a 4-digit frequency counter with a clock generator.
(To learn designing a digital circuit using available standard gate, FF, counter and display Ics.)

3. Designing logic circuits using multiplexers, demultiplexers and gates to implement logic functions. (To learn the use multiplexers and demultiplexers)

4. Design and implement a sequence detector.
(To learn designing a sequential circuit, whose output is 1 or 0 when any input bit is preceded or succeeded by a predefined binary sequence. To define the input & output sequence from a given physical problem, to prepare a state diagram, derive a minimal state table, to find the simplified state equation, to implement the same & verify the result)

5. To design and implement a combination of a logic circuit and a RAM in order to generate a 4-bit data after simplifying a logic expression, to store the output data at a predefined location in the RAM, to retrieve the same and verify.
(To comprehend the structure and operating principle of memory devices.)

D. Power Electronics

1. Design a Single-phase full & shaft controlled converter.
2. Design of Microprocessor based Triggering socket.

Syllabus for B.Tech(Electrical Engineering) Up to Fourth

3rd Semester

Theory:

Sl. No.	CODE	Paper	Contacts periods Per weeks			Total Contact Hrs	Credits
			L	T	P		
1	M (CS) 301	Numerical Methods	2	1	0	3	2
2	M302	Mathematics-III	3	1	0	4	4
3	EC(EE)301	Analog Electronic circuits	3	0	0	3	3
4	EC(EE)302	Digital Electronic circuit	3	0	0	3	3
5	EE-301	Electric Circuit theory	3	1	0	4	4
6	EE-302	Field theory	3	1	0	4	4
						21	20

Practical / Sessional:

Sl. No.	CODE	Paper	Contacts periods Per weeks			Total Contact Hrs	Credits
			L	T	P		
1	EC(EE)391	Analog & Digital Electronic circuit	0	0	3	3	2
2	M (CS)391	Numerical Methods	0	0	2	2	1
3	EE-391	Electric Circuit Theory	0	0	3	3	2
4	HU-381	TECHNICAL REPORT WRITING & LANGUAGE LABORATORY PRACTICE	0	0	3	3	2
		Total of Practical / Sessional				11	7
TOTAL OF SEMESTER:						32	27

4th Semester

Theory:

Sl. No.	CODE	Paper	Contacts periods Per weeks			Total Contact Hrs	Credits
			L	T	P		
1	HU-401	Values and Ethics in Profession	3	0	0	3	3
2	PH(EE)-401	Physics-II	3	1	0	4	4
3	ME(EE)411	Thermal Power Engineering	3	0	0	3	3
4	CH-401	Basic Environmental Engineering & Elementary Biology	3	0	0	3	3
5	EE-401	Electric Machine-I	3	1	0	4	4
6	EE-402	Electrical & Electronic measurement	3	0	0	3	3
						20	20

Practical / Sessional:

Sl. No.	CODE	Paper	Contacts periods Per weeks			Total Contact Hrs	Credits
			L	T	P		
1	PH(EE)-491	Physics-II	0	0	3	3	2
2	ME(EE)481	Thermal power Engineering Lab	0	0	3	3	2
3	EE-491	Electric Machine-I	0	0	3	3	2
4	EE-492	Electrical & Electronic measurement	0	0	3	3	2
		Total of Practical / Sessional				12	8

TOTAL OF SEMESTER:				32	28

Syllabus for B.Tech(Electrical Engineering) Up to Fourth

Syllabus for B.Tech(Electrical Engineering) Up to Fourth

5th Semester

Theory:

Sl. No.	CODE	Paper	Contacts periods Per weeks			Total Contact Hrs	Credits
			L	T	P		
1	HU-501	Economics for Engineers	3	0	0	3	3
2	EE-501	Electric machine-II	3	1	0	4	4
3	EE-502	Power system-I	3	1	0	4	4
4	EE-503	Control system-I	3	1	0	4	4
5	EE-504	A. Data structure & algorithm B. Computer Organization C. Micro Processor & Micro controller	3	0	0	3	3
						18	18

Practical / Sessional:

Sl. No.	CODE	Paper	Contacts periods Per weeks			Total Contact Hrs	Credits
			L	T	P		
1	EE-591	Electric machine-II	0	0	3	3	2
2	EE-592	Power system-I	0	0	3	3	2
3	EE-593	Control system-I	0	0	3	3	2
4	EE-594	a. Data structure & algorithm b. Computer Organization c. Micro Processor & Microcontroller	0	0	3	3	2
5	EE-581	Seminar	0	0	3	3	2
		Total of Practical / Sessional				15	10
TOTAL OF SEMESTER:						33	28

EE 6th Semester

Theory:

Sl. No.	CODE	Paper	Contact periods Per week			Total Contact Hrs	Credits
			L	T	P		
1	HU-601	Principle of Management	2	0	0	2	2
2	EE-601	Control System-II	3	1	0	4	4
3	EE-602	Power System-II	3	1	0	4	4
4	EE-603	Power Electronics	3	1	0	4	4
5	EE-604	a. Software Engineering b. Data Base Management System c. Object Oriented Programming d. Embedded Systems.	3	0	0	3	3
6	EE-605	a. Digital Signal Processing b. Communication Engineering. c. VLSI & Microelectronics	3	0		3	3
						20	20

Practical / Sessional:

Sl. No.	CODE	Paper	Contact period Per week			Total Contact Hrs	Credits
			L	T	P		
1	EE-691	Control System-II	0	0	3	3	2
2	EE-692	Power System-II	0	0	3	3	2
3	EE-693	Power Electronics	0	0	3	3	2

4	EE-694	a. Software Engineering b. Data Base Management System c. Object Oriented Programming d. Embedded Systems	0	0	3	3	2
		Total of Practical / Sessional				12	8
TOTAL OF SEMESTER						32	28

Industrial training conducted after 6th Semester.

Syllabus for B.Tech(Electrical Engineering) Up to Fourth

7th Semester

Theory:

Sl. No.	CODE	Paper	Contacts periods Per weeks			Total Contact Hrs	Credits
			L	T	P		
1	EE-701	Electric drive	4	0	0	4	4
2	EE-702	Utilization of Electric power	3	1	0	4	4
3	EE-703	A. Power system-III B. Control system-III C. Electric Machine-III	3	0	0	3	3
4	EE-704	A. High voltage Engineering B. Power Plant Engineering C. Power generation and economics D. Renewable & Non conventional Energy	3	0	0	3	3
5	EE-705	A. Computer Network B. AI & Soft Computing C. Digital Communication D. Digital Image Processing	3	0	0	3	3
						17	17

Practical / Sessional:

Sl. No.	CODE	Paper	Contacts periods Per weeks			Total Contact Hrs	Credits
			L	T	P		
1	EE-781	Seminar on industrial training	0	0	3	3	2
2	EE-791	Electric Drive	0	0	3	3	2
3	EE-792	A. Computer Network B. AI & Soft Computing C.Digital Communication D. Digital Image Processing	0	0	3	3	2
4	EE-782	Electrical system design-I	0	0	3	3	2
5	EE-783	Project-I	0	0	3	3	2
		Total of Practical / Sessional				9	10
TOTAL OF SEMESTER:			18	02	09	29	27

8th Semester

Theory:

Sl. No.	CODE	Paper	Contacts periods Per weeks			Total Contact Hrs	Credits
			L	T	P		
1	HU-801A	Organizational Behaviour	2	0	0	2	2
2	EE-801	A. HVDC transmission B. Illumination Engineering C. Energy management & audit D. DIGITAL SPEECH SIGNAL PROCESSING	3	0	0	3	3
3	EE-802	A. Power plant instrumentation & Control B. Sensors & Transducers C. Biomedical Instrumentation D. Process control	3	0	0	3	3
		TOTAL				08	08

Practical / Sessional:

Sl. No.	CODE	Paper	Contacts periods Per weeks			Total Contact Hrs	Credits
			L	T	P		
1	EE-881	Project	0	0	12	12	6
2	EE-882	Electrical system Lab-II	0	0	6	6	4
3	EE-883	Grand Viva					3

		Total of Practical / Sessional				18	13
		TOTAL SEMESTER				26	21

Syllabus for B.Tech(Electrical Engineering) Up to Fourth

Syllabus for B.Tech(Electrical Engineering) Up to Fourth

III **Semester**

NUMERICAL METHODS
Code : M(CS) 301
Contacts : 2L+1T Credits :2

Approximation in numerical computation: Truncation and rounding errors, Fixed and floating-point arithmetic, Propagation of errors. (4)

Interpolation: Newton forward/backward interpolation, Lagrange's and Newton's divided difference Interpolation. (5)

Numerical integration: Trapezoidal rule, Simpson's 1/3 rule, Expression for corresponding error terms. (3)

Numerical solution of a system of linear equations:
Gauss elimination method, Matrix inversion, LU Factorization method, Gauss-Seidel iterative method. (6)

Numerical solution of Algebraic equation:
Bisection method, Regula-Falsi method, Newton-Raphson method.

(4)

Numerical solution of ordinary differential equation: Euler's method, Runge-Kutta methods, Predictor-Corrector methods and Finite Difference method. (6)

Text Books:

1. C.Xavier: C Language and Numerical Methods.
2. Dutta & Jana: Introductory Numerical Analysis.
3. J.B.Scarborough: Numerical Mathematical Analysis.
4. Jain, Iyengar , & Jain: Numerical Methods (Problems and Solution).

References:

1. Balagurusamy: Numerical Methods, Scitech.
2. Baburam: Numerical Methods, Pearson Education.
3. N. Dutta: Computer Programming & Numerical Analysis, Universities Press.
4. Soumen Guha & Rajesh Srivastava: Numerical Methods, OUP.
5. Srimanta Pal: Numerical Methods, OUP.

MATHEMATICS

Code: M 302 Contacts:

3L +1T = 4 Credits: 4

Note 1: The entire syllabus has been divided into four modules. Note 2:
Structure of Question Paper

There will be two groups in the paper:

Group A: Ten questions, each of 2 marks, are to be answered out of a total of 15 questions, covering the entire syllabus.

Group B: Five questions, each carrying 10 marks, are to be answered out of (at least) 8 questions. Students should answer at least one question from each module.
[At least 2 questions should be set from each of Modules II & IV.

At least 1 question should be set from each of Modules I & III. Sufficient questions should be set covering the whole syllabus for alternatives.]

Syllabus for B.Tech(Electrical Engineering) Up to Fourth

Syllabus for B.Tech(Electrical Engineering) Up to Fourth

Module I: Fourier Series & Fourier Transform [8L] Topic:
Fourier Series:
Sub-Topics: Introduction, Periodic functions: Properties, Even & Odd functions: Properties, Special wave forms: Square wave, Half wave Rectifier, Full wave Rectifier, Saw-toothed wave, Triangular wave.
(1)
Euler's Formulae for Fourier Series, Fourier Series for functions of period 2π, Fourier Series for functions of period $2l$, Dirichlet's conditions, Sum of Fourier series. Examples. (1)
Theorem for the convergence of Fourier Series (statement only). Fourier Series of a function with its periodic extension. Half Range Fourier Series: Construction of Half range Sine Series, Construction of Half range Cosine Series. Parseval's identity (statement only). Examples. (2)

Topic: Fourier Transform:
Sub-Topics: Fourier Integral Theorem (statement only), Fourier Transform of a function, Fourier Sine and Cosine Integral Theorem (statement only), Fourier Cosine & Sine Transforms. Fourier, Fourier Cosine & Sine Transforms of elementary functions. (1)

Properties of Fourier Transform: Linearity, Shifting, Change of scale, Modulation. Examples. Fourier Transform of Derivatives. Examples. (1)

Convolution Theorem (statement only), Inverse of Fourier Transform, Examples. (2)

Module II : Calculus of Complex Variable [13L]

Topic: Introduction to Functions of a Complex Variable.

Sub-Topics: Complex functions, Concept of Limit, Continuity and Differentiability. (1)

Analytic functions, Cauchy-Riemann Equations (statement only). Sufficient condition for a function to be analytic. Harmonic function and Conjugate Harmonic function, related problems. (1)

Construction of Analytic functions: Milne Thomson method, related problems. (1)

Topic: Complex Integration.

Sub-Topics: Concept of simple curve, closed curve, smooth curve & contour. Some elementary properties of complex Integrals. Line integrals along a piecewise smooth curve. Examples. (2)

Cauchy's theorem (statement only). Cauchy-Goursat theorem (statement only). Examples. (1)

Cauchy's integral formula, Cauchy's integral formula for the derivative of an analytic function, Cauchy's integral formula for the successive derivatives of an analytic function. Examples. (2)

Taylor's series, Laurent's series. Examples (1)

Topic: Zeros and Singularities of an Analytic Function & Residue Theorem.

Sub-Topics: Zero of an Analytic function, order of zero, Singularities of an analytic function. Isolated and non-isolated singularity, essential singularities. Poles: simple pole, pole of order m.

Examples on determination of singularities and their nature. (1)

Syllabus for B.Tech(Electrical Engineering) Up to Fourth

Residue, Cauchy's Residue theorem (statement only), problems on finding the residue of a given function, evaluation of definite integrals: $\int_0^{\infty} \frac{\sin x}{x}\,dx$, $\int_0^{2\pi} \frac{d\theta}{a + b\cos\theta + c\sin\theta}$, $\oint \frac{P(z)}{Q(z)}\,dz$ (elementary cases, P(z) & Q(z) are polynomials of 2nd order or less). (2)

Topic: Introduction to Conformal Mapping.

Sub-Topics: Concept of transformation from z-plane to w-plane. Concept of Conformal Mapping. Idea of some standard transformations. Bilinear Transformation and determination of its fixed point. (1)

Module III: Probability [8L] Topic:
Basic Probability Theory
Sub-Topics: Classical definition and its limitations. Axiomatic definition.
Some elementary deduction: i) P(O)=0, ii) 0≤P(A)≤1, iii) P(A')=1−P(A) etc. where the symbols have their usual meanings. Frequency interpretation of probability.
(1)

Addition rule for 2 events (proof) & its extension to more than 2 events (statement only). Related problems. Conditional probability & Independent events. Extension to more than 2 events (pairwise & mutual independence). Multiplication Rule. Examples. Baye's theorem (statement only) and related problems. (3)

Topic: Random Variable & Probability Distributions. Expectation.
Sub-Topics: Definition of random variable. Continuous and discrete random variables. Probability density function & probability mass function for single variable only. Distribution function and its properties (without proof). Examples. Definitions of Expectation & Variance, properties & examples. (2)

Some important discrete distributions: Binomial & Poisson distributions and related problems.
Some important continuous distributions: Uniform, Exponential, Normal distributions and related problems.
Determination of Mean & Variance for Binomial, Poisson & Uniform distributions only.
(2)

Module IV: Partial Differential Equation (PDE) and Series solution of Ordinary Differential Equation (ODE) [13L]

Topic: Basic concepts of PDE.
Sub-Topics: Origin of PDE, its order and degree, concept of solution in PDE. Introduction to different methods of solution: Separation of variables, Laplace & Fourier transform methods. (1)

Topic: Solution of Initial Value & Boundary Value PDE's by Separation of variables, Laplace & Fourier transform methods.

Sub-Topics: **Syllabus for B.Tech(Electrical Engineering) Up to Fourth**

PDE I: One dimensional Wave equation. (2)
PDE II: One dimensional Heat equation. (2)
PDE III: Two dimensional Laplace equation. (2)

Topic: Introduction to series solution of ODE.

Sub-Topics: Validity of the series solution of an ordinary differential equation. General method to solve $P_o y''+P_1 y'+P_2 y=0$ and related problems. (2)
Topic: Bessel's equation.

Sub-Topics: Series solution, Bessel function, recurrence relations of Bessel's Function of first kind. (2)
Topic: Legendre's equation.
Sub-Topics: Series solution, Legendre function, recurrence relations and orthogonality relation. (2)

TOTAL LECTURES : 42

Text Books:

2. Brown J.W and Churchill R.V: Complex Variables and Applications, McGraw-Hill.
3. Das N.G.: Statistical Methods, TMH.
4. Grewal B S: Higher Engineering Mathematics, Khanna Publishers.
5. James G.: Advanced Modern Engineering Mathematics, Pearson Education.
6. Lipschutz S., and Lipson M.L.: Probability (Schaum's Outline Series), TMH.

References:

1. Bhamra K. S.: Partial Differential Equations: An introductory treatment with applications, PHI
2. Dutta Debashis: Textbook of Engineering Mathematics, New Age International Publishers.
3. Kreyzig E.: Advanced Engineering Mathematics, John Wiley and Sons.
4. Potter M.C, Goldberg J.L and Aboufadel E.F.: Advanced Engineering Mathematics, OUP.
5. Ramana B.V.: Higher Engineering Mathematics, TMH.
6. Spiegel M.R. , Lipschutz S., John J.S., and Spellman D., : Complex Variables, TMH.

ANALOG ELECTRONIC CIRCUITS EC (EE)-301

Credit: 3 **Contact: 3L**

Module	Content	Hour
1	**Filters & Regulators:** Capacitor filters, π-section filter, ripple factor, series and shunt voltage regulator, percentage regulation, Concept of SMPS.	4
2	**Transistor biasing & stability:** Q point, Self Bias-CE, Compensation techniques, h-model of Transistor, Expression of voltage gain, current gain, input & output impedance, Trans-resistance & Trans-conductance, Emitter follower circuits, High frequency model of Transistor.	5
3	**Transistor amplifier:** RC coupled amplifier, Function of all components, Equivalent circuit, derivation of voltage gain, Current gain, Input impedance & output impedance, Frequency response characteristics, Lower & upper half frequencies, Bandwidth, Concept of Wide band amplifier.	5
4	**Feed back amplifier & Oscillators:** Concept of Feed back, Negative & Positive feedback, Voltage/Current, Series/Shunt feedback, Berkhausen criterion, Colpit , Hartley's, Phase shift, Wien bridge, & Crystal oscillators.	4
5	**Operational amplifier:** Ideal OPAMP, Differential amplifier, Constant current source (Current mirror etc), Level shifter, CMRR, Open & closed loop circuits, importance of feedback loop (positive & negative), inverting & non-inverting amplifiers, Voltage follower/Buffer circuits.	5

6	**Application of Operational amplifiers:** Adder, Integrator & Differentiator, Comparator, Schmitt Trigger, Instrumentation Amplifier, Log & Antilog	5

	amplifier, Trans-conductance multiplier, Precision rectifier, Voltage to current & Current to voltage converter.	
7	**Power amplifier:** Class A, B, AB, C, Conversion efficiency, Tuned amplifier.	4
8	**Multivibrator:** Monostable, Bistable multivibrator, Monostable & Astable operation using 555 timer.	2
9	**Special function circuits:** VCO & PLL	2

Text Books:

1. Microelectronic Circuits, Sedra & Smith, Oxford University Press.
2. Integrated Electronics, Milman & Halkias, Mc Graw Hill Company.
3. Electronic devices & Circuits, Balbir Kumar & Shail B. Jain, PHI.
4. Op-amps and Linear IC's, R.A. Gayakwad, PHI.

Reference Books:

1. Microelectronic Circuit- Analysis & Design, Rashid, Cenage Learning.
2. Electronic Circuits: Discrete & Integrated, 3rd Edition, Schilling & Belove, Mc Graw Hill Company.
3. Electronic principles, 6th Edition, Malvino, Mc Graw Hill Company.
4. Operational Amplifier & Linear IC's, Bell, Oxford University Press.
5. 2000 Solved Problems in Electronics, Jimmie J. Cathey, Mc Graw Hill Inc.
6. Electronic Devices -System & Application, Robert Diffenderfer, Cengage Learning.
7. Op- Amps & Linear Integrated Circuits, Ravi Raj Dudeja & Mohan Dudeja, Umesh Publication.

DIGITAL ELECTRONICS CIRCUITS EC (EE)-302

Credit: 3 **Contact: 3L**

Module	Content	Hour
1	**Data and number system:** Binary, Octal and Hexadecimal representation and their conversion, BCD, ASCII, EBDIC, Gray codes and their conversion, Signed binary numbers representation with 1's and 2's complement methods, Binary arithmetic.	5
2	**Boolean algebra:** Various logic gates and their truth tables and circuits, Representation in SOP and POS forms, Minimization of logic expressions by algebraic method, K-map method.	5
3	**Combinational circuits:** Adder and sub tractor circuit, Circuit of Encoder, Decoder, Comparator, Multiplexer, De-Multiplexer and parity Generator.	5
4	**Memory systems:** RAM, ROM, EPROM, EEROM	4
5	**Sequential circuits:** Basic memory elements, S-R, J-K, D, and T Flipflop, various types of Registers, Counters & their design, Irregular counter, State table & State transition diagram, Sequential circuit design methodology.	6
6	**Different types of A/D and D/A conversion techniques.**	4
7	**Logic families:** TTL, ECL, MOS & CMOS, their operation and specification.	5

Text Books:

1. Digital Principles & Application, 5th Edition, Leach & Malvino, Mc Graw Hill Company.
2. Modern Digital Electronics, 2nd Edition, R.P. Jain. Tata Mc Graw Hill Company Limited

3. Fundamental of Digital Circuits, A. Anand Kumar, PHI.

Reference Books:

1. Digital Logic Design, Morries Mano, PHI.

2. Digital Integrated Electronics, H. Taub & D. Shilling, Mc Graw Hill Company.
3. Digital Electronics, James W. Bignell & Robert Donovan, Thomson Delman Learning.
4. Fundamental of logic Design, Charles H. Roth, Thomson Delman Learning.

ELECTRIC CIRCUIT THEORY EE-301

Credit: 4 **Contact: 3L+1T**

Module	Content	Hour
1	**Introduction:** Continuous & Discrete, Fixed & Time varying, Linear and Nonlinear, Lumped and Distributed, Passive and Active networks and systems. Independent & Dependent sources, Step, Ramp, Impulse, Sinusoidal, Square, Saw tooth signals.	3
2	**Coupled circuits:** Magnetic coupling, Polarity of coils, Polarity of induced voltage, Concept of Self and Mutual inductance, Coefficient of coupling, Modeling of coupled circuits, Solution of problems.	3
3	**Laplace transforms:** Impulse, Step & Sinusoidal response of RL, RC, and RLC circuits. Transient analysis of different electrical circuits with and without initial conditions. Concept of Convolution theorem and its application. Solution of Problems with DC & AC sources.	8
4	**Fourier method of waveform analysis:** Fourier series and Fourier Transform (in continuous domain only). Application in circuit analysis, Solution of Problems	8
5	**Network equations**: Formulation of network equations, Source transformation, Loop variable analysis, Node variable analysis. Network theorem: Superposition, Thevenin's, Norton's & Maximum power transfer theorem. Millman's theorem and its application in three phase unbalanced circuit analysis. Solution of Problems with DC & AC sources.	6
6	**Graph theory and Networks equations:** Concept of Tree, Branch, Tree link, Incidence matrix, Tie-set matrix and loop currents, Cut set matrix and node pair potentials. Duality, Solution of Problems	4
7	**Two port networks analysis:** Open circuit Impedance & Short circuit Admittance parameter, Transmission parameters, Hybrid parameters and their inter relations. Driving point impedance & Admittance. Solution of Problems	4
8	**Filter Circuits:** Analysis and synthesis of Low pass, High pass, Band pass, Band reject, All pass filters (first and second order only) using operational amplifier. Solution of Problems	4

Text Books:

1. Networks and Systems, D. Roy Chowdhury, New Age International Publishers
2. Network Analysis and Synthesis, C.L. Wadhwa, New Age International Publishers
3. Circuit and Networks: Analysis and synthesis, A. Sudhakar & S.S. Palli 4th edition. Tata Mc Graw Hill Education Pvt. Ltd.
4. Circuit theory, Dr. Abhijit Chakrabarty, Dhanpat Rai & Co Pvt. Ltd.

Reference Books:

1. Network Analysis, M.E. Valkenburg, Pearson Education .
2. Fundamental of Electric circuit theory, D. Chattopadhay & P.C. Rakshit, S. Chand.
3. Engineering Circuit Analysis, W.H. Hyat, J.E. Kemmerly & S.M. Durbin, The Mc Graw Hill

Syllabus for B.Tech(Electrical Engineering) Up to Fourth

Company.

4. Electric Circuit, M. Nahvi & J.A. Edminister, Schum's outline series, The Mc Graw Hill Company.
5. Electric Circuit Analysis, S. Sivanagaraju, G. Kishor, C.Srinivasa Rao, Cengage Learning
6. Fundamental of Electric Circuits, Charles K. Alexander, Mathew. N.O. Sadiu, Tata Mc Graw Hill Educaton.
7. Engineering Circuit Analysis, W.H. Hayt, J.E. Kemmerly, S.M. Durbin, The Mc Graw Hill Companies
8. Introduction to Electric Circuits, Richard C. Dorf, James A. Svoboda, Wiley India Edition.
9. Electric Circuits, Syed A. Nasar, Schaum's solved problem series, Tata Mc Graw Hill Publishing Company Limited.

FIELD THEORY EE-302

Credit: 4 **Contact: 3L+1T**

Module	Content	Hour
1	**Introduction:** Co-ordinate systems and transformation, Cartesian coordinates, Circular cylindrical coordinates, Spherical coordinates & their transformation. Differential length, area and volume in different coordinate systems. Solution of problems	3
2	**Introduction to Vector calculus:** DEL operator, Gradient of a scalar, Divergence of a vector & Divergence theorem, Curl of a vector & Strokes theorem, Laplacian of a scalar, Classification of vector fields, Helmholtz's theorem. Solution of problems	3
3	**Electrostatic field:** Coulomb's law, field intensity, Gauss's law, Electric potential and Potential gradient, Relation between E and V, an Electric dipole and flux lines. Energy density in electrostatic field. Boundary conditions: Dielectric-dielectric, Conductor –dielectric, Conductor-free space. Poisson's and Laplace's equation, General procedure for solving Poisson's and Laplace's equation. Solution of problems	8
4	**Magneto static fields:** Biot- savart law, Ampere's circuit law, Magnetic flux density, Magnetic static and Vector potential, Forces due to magnetic field, Magnetic torque and moments, Magnetisation in material, Magnetic boundary condition, Inductor and Inductances, Magnetic energy, Force on magnetic material. Solution of problems	8
5	**Electromagnetic fields:** Faraday's law, Transformer and motional emf, Displacement current, Maxwell's equations, Time varying Potential, Time harmonic fields. Solution of problems	5
6	**Electromagnetic wave propagation:** Wave equation, Wave propagation in lossy dielectric, Plane waves in loss less dielectric, Plane wave in free space, Plane wave in good conductor, Skin effect, Skin depth, Power & Poynting vector, Reflection of a plane wave at normal incidence, reflection of a plane wave at oblique incidence, Polarisation. Solution of problems	6
7	**Transmission line:** Concept of lump & distributed parameters, Line parameters, Transmission line equation & solutions, Physical significance of solutions, Propagation constants, Characteristic impedance, Wavelength, Velocity of propagation. Solution of problems	4

Syllabus for B.Tech(Electrical Engineering) Up to Fourth

Text Books:

1. Elements of Electromagnetic, Mathew N.O. Sadiku, 4th edition, Oxford university press.

2. Engineering Electromagnetic, W.H. Hyat & J.A. Buck, 7th Edition, TMH
3. Theory and problems of Electromagnetic, Edminister, 2nd Edition, TMH
4. Electromagnetic field theory fundamentals, Guru & Hizroglu, 2nd edition, Cambridge University Press.

Reference Books:

1. Electromagnetic with application, Krause, 5th Edition, TMH.
2. Elements of Engineering Electromagnetic, N.N. Rao, 6th Edition, Pearson Education.

Practical

Analog & Digital Electronic Circuit EC (EE)-391

Credit: 2 **Contact: 3**

1. Study of Ripple and Regulation characteristics of full wave rectifier with and without capacitor filter.
2. Study of Zener diode as voltage regulator.
3. Construction of two stage R-C coupled amplifier & study of its gain and Bandwith.
4. Study of class A, C & Push pull amplifier.
5. Realisation V-I & I-V converter using Operational Amplifier.
6. Study of timer circuit using NE 555 and configuration of Monostable and Astable Multivibrator.
7. Study of DAC & ADC
8. Realisation of basic gates using Universal logic gates.
9. Realisation of RS-JK & D filpflop using logic gates.
10. Design of Combinational circuit for BCD to decimal conversion to drive 7-segment display using Multiplexer.
11. Realisation of Synchronous Up/Down counter.
12. Construction of simple Decoder & Multiplexer circuits using logic gates.
13. Construction of adder circuit using Shift register & Full adder.

NUMERICAL METHODS
Code : M(CS) 391
Credits :1

1. Assignments on Newton forward /backward, Lagrange's interpolation.
2. Assignments on numerical integration using Trapezoidal rule, Simpson's 1/3 rule, Weddle's rule.
3. Assignments on numerical solution of a system of linear equations using Gauss elimination and Gauss-Seidel iterations.
4. Assignments on numerical solution of Algebraic Equation by Regular-falsi and Newton Raphson methods.
5. Assignments on ordinary differential equation: Euler's and Runga-Kutta methods.
6. Introduction to Software Packages: Matlab / Scilab / Labview / Mathematica.

ELECTRIC CIRCUIT THEORY LABORATORY EE-391

Credit: 2 **Contact: 3**

1. Transient response of R-L and R-C network: simulation with PSPICE /Hardware
2. Transient response of R-L-C series and parallel circuit: Simulation with PSPICE/ Hardware

3. Determination of Impedance (Z) and Admittance (Y) parameter of two port network: Simulation / Hardware.
4. Frequency response of LP and HP filters: Simulation / Hardware.
5. Frequency response of BP and BR filters: Simulation /Hardware.
6. Generation of Periodic, Exponential, Sinusoidal, Damped Sinusoidal, Step, Impulse, Ramp signal using MATLAB in both discrete and analog form.
7. Determination of Laplace transform and Inverse Laplace transform using MATLAB.
8. Amplitude and Phase spectrum analysis of different signals using MATLAB.
9. Verification of Network theorem using SPICE

PAPER NAME : TECHNICAL REPORT WRITING & LANGUAGE LABORATORY PRACTICE
PAPER CODE: HU 381
CONTACT: 1L+2P
CREDIT : 2

Guidelines for Course Execution:
Objectives of this Course: This course has been designed:

1. **To inculcate a sense of confidence in the students.**
2. **To help them become good communicators both socially and professionally.**
3. **To assist them to enhance their power of Technical Communication.**

Detailed Course Outlines:

A. ***Technical Report Writing*** : 2L+6P

1. Report Types (Organizational / Commercial / Business / Project)
2. Report Format & Organization of Writing Materials
3. Report Writing (Practice Sessions & Workshops)

B. Language Laboratory Practice

I. Introductory Lecture to help the students get a clear idea of Technical Communication & the need of Language Laboratory
Practice Sessions 2L
2. Conversation Practice Sessions: (To be done as real life interactions) 2L+4P
a) Training the students by using Language Lab Device/Recommended Texts/cassettes /cd's to get their Listening Skill & Speaking Skill honed
b) Introducing Role Play & honing over all Communicative Competence
3. Group Discussion Sessions: 2L+6P
a) Teaching Strategies of Group Discussion
b) Introducing Different Models & Topics of Group Discussion
c) Exploring Live /Recorded GD Sessions for mending students' attitude/approach & for taking remedial measure
Interview Sessions; 2L+6P

- ***a) Training students to face Job Interviews confidently and successfully***
- ***b) Arranging Mock Interviews and Practice Sessions for integrating Listening Skill with Speaking Skill in a formal situation for effective communication***

4. Presentation: 2L+6P
a) Teaching Presentation as a skill

b) Strategies and Standard Practices of Individual /Group Presentation

c) Media & Means of Presentation: OHP/POWER POINT/ Other Audio-Visual Aids

5. Competitive Examination: 2L+2P

a) Making the students aware of Provincial /National/International Competitive Examinations

b) Strategies/Tactics for success in Competitive Examinations

c) SWOT Analysis and its Application in fixing Target

Books – Recommended:

Nira Konar: English Language Laboratory: A Comprehensive Manual PHI Learning, 2011

D. Sudharani: Advanced Manual for Communication Laboratories & Technical Report Writing Pearson Education (W.B. edition), 2011

References:

Adrian Duff et. al. (ed.): Cambridge Skills for Fluency

A) Speaking (Levels 1-4 Audio Cassettes/Handbooks)

B) Listening (Levels 1-4 Audio Cassettes/Handbooks)

Cambridge University Press 1998

Mark Hancock: English Pronunciation in Use

4 Audio Cassettes/CD'S OUP 2004

IV **Semester**

Theory

VALUES & ETHICS IN PROFESSION

HU-401
Contracts: 3L
Credits- 3

Science, Technology and Engineering as knowledge and as Social and Professional Activities

Effects of Technological Growth:

Rapid Technological growth and depletion of resources, Reports of the Club of Rome. Limits of growth: sustainable development
Energy Crisis: Renewable Energy Resources
Environmental degradation and pollution. Eco-friendly Technologies. Environmental Regulations, Environmental Ethics
Appropriate Technology Movement of Schumacher; later developments
Technology and developing notions. Problems of Technology transfer, Technology assessment impact analysis.
Human Operator in Engineering projects and industries. Problems of man, machine, interaction, Impact of assembly line and automation. Human centered Technology.

Ethics of Profession:

Engineering profession: Ethical issues in Engineering practice, Conflicts between business demands and professional ideals. Social and ethical responsibilities of Technologists. Codes of professional ethics. Whistle blowing and beyond, Case studies.

Syllabus for B.Tech(Electrical Engineering) Up to Fourth

Profession and Human Values:

Syllabus for B.Tech(Electrical Engineering) Up to Fourth

Values Crisis in contemporary society
Nature of values: Value Spectrum of a good life Psychological
values: Integrated personality; mental health
Societal values: The modern search for a good society, justice, democracy, secularism, rule of law, values in Indian Constitution.
Aesthetic values: Perception and enjoyment of beauty, simplicity, clarity
Moral and ethical values: Nature of moral judgements; canons of ethics; ethics of virtue; ethics of duty; ethics of responsibility.

Books:

1. Stephen H Unger, Controlling Technology: Ethics and the Responsible Engineers, John Wiley & Sons, New York 1994 (2nd Ed)
2. Deborah Johnson, Ethical Issues in Engineering, Prentice Hall, Englewood Cliffs, New Jersey 1991.
3. A N Tripathi, Human values in the Engineering Profession, Monograph published by IIM, Calcutta 1996.

PH (EE)-401 4: Physics
Contacts : 3L + 1T
Credits 4

Topic	No of
Module-I	
Quantum mechanics: ● Generalized co-ordinates, Lagrange's equation of motion and Lagrangian, generalized force potential, moment and energy. Hamilton's Equation of motion and Hamiltonian. Properties of Hamilton and Hamilton's equation of motion. ● Concept of probability and probability density, operator, Commutator, Formulation of quantum mechanics and Basic postulates, Operator correspondence, Time dependent Schrödinger's equation, formulation of time independent Schrödinger's equation by method of separation of variables, Physical interpretation of wave function Ψ(normalization and probability interpretation), Expectation values, Application of Schrödinger equation-Particle in an infinite square well potential (1-D and 3-D potential well), Discussion on degenerate levels.	6 10
Module-II	
Statistical ● Concept of energy levels and energy states. Microstates, Macrostates and thermodynamic probability, equilibrium macrostate. MB, FD, BE statistics (no deduction necessary), fermions, bosons (definitions in terms of spin, examples), physical significance and application, classical limits of quantum statistics. Fermi distribution at zero and non –zero	4
Module-III	
Dielectric Properties: ● Dielectric Material: Concept of Polarization, the relation between D, E and P, Polarizability, Electronic, Ionic, Orientation & Space charge polarization, behavior of Dielectric under alternating field, Dielectric losses. The Magnetic properties: ● Magnetization M, relation between B, H & M. Bohr megneton, Diamagnetism-Larmor frequency & susceptibility, Curie law, Weiss molecular field theory & Curie-Weiss law, Hysteresis loss, Antiferromagnetism, Ferromagnetism & Ferrites (analitative).	3 4

Syllabus for B.Tech(Electrical Engineering) Up to Fourth

Module-IV

Cathode ray oscilloscope (CRO): ●	3

Electronic Instruments: ●		

4

Sensors & Transducers: ●		

	3
L	

Syllabus for B.Tech(Electrical Engineering) Up to Fourth

R3
1k

1.	Introduction to Microcomputer based system. History Evolution of Microprocessor and microcontrollers and their advantages and disadvantages.	1
	Architecture of 8085 Microprocessor. Address / Data Bus multiplexing and demultiplexing. Status and Control signal generation. Instruction set of 8085 Microprocessor. Classification of instructions, addressing modes, timing diagram of the instructions. **Assembly language programming:** Addition, Multiplication, Block Transfer, Ascending order, Descending order, Finding largest & smallest number, Look-up table etc. Interrupts of 8085 processor: classification of interrupts, Programming using interrupts (programming using INTR is not required)	8
	Serial and parallel data transfer – Basic concept of serial I/O, DMA, Asynchronous and synchronous serial transmission using SID and SOD pins of 8085 Microprocessor.	2
2	**8051 architecture**: 8051 micro controller hardware, input/output pins, ports, external memory, counters and timers, instruction set, addressing modes, serial data i/o, interrupts. **Assembly language Programming using 8051** Moving data: External data moves, code memory read only data moves, PUSH and POP opcodes, data exchanges. Logical operations: Byte-level, bit-level, rotate and swap operations. Arithmetic operations: Flags, incrementing and decrementing, addition, subtraction, multiplication and division, decimal arithmetic. Jump and call instructions: Jump and call program range, jumps, calls and subroutines, interrupts and returns.	7
3	The 8086 microprocessor: Architecture, Pin details, memory segmentation, addressing modes, Familiarization of basic Instructions, Interrupts. Assembly language programming: Addition, Multiplication, Block Transfer, Ascending order, Descending order, Finding largest & smallest number etc.	7
4	Support IC chips: 8255, 8253 and 8251: Block Diagram, Pin Details, Modes of operation, control word(s) format. Interfacing of support IC chips with 8085, 8086 and 8051.	6
	Memory interfacing with 8085, 8086 & 8051. ADC / DAC interfacing with 8085, 8086 & 8051.	4
	Brief introduction to PIC microcontroller (16F877): Architecture, PIN details, memory layout etc.	1

Crystal structure	
● Crystal structure- Bravais lattice, Miller indices	1
● Crystal diffraction (qualitative), Bragg's law and reciprocal lattice,Brillouin zone. (Qualitative description)	2
● Free electron theory of metal – calculation of Fermi energy, density of states.	2
● Band theory of solids- Bloch theorem, Kronig Penny model.	3
● Electronic conduction in solids-Drude's theory, Boltzmann equation, Wiedemann Frantz law.	3
● Semiconductor-Band structure, concept of electron and holes, Fermi level, density of states.	3

Text Books:

1. Perspectives of Modern Physics: A. Baiser
2. Modern Physics and Quantum Mechanics E.E. Anderson 2.Refresher course in B.Sc. Physics (Vol. III): C.L. Arora 3.Fundamentlas of Physics (Vol. III): Haliday, Resnick & Krane
4. Engineering Physics: R.K. Kar
5. Classical Mechanics: a) A.K. Roychaudhuri
   b) R.G. Takwal & P.S. Puranic
6. Quantum Mechanics: a) Eisberg & Resnic
   b) A.K. Ghatak & S. Lokanathan
   c) S.N. Ghoshal

7. Statistical Mechanics and Thermal Physics:	a) Sears and Salinger b) Avijit Lahiri c) Evelyn Guha
8. Solid Sate Physics:	a) A.J. Dekker b) C. Kittel c) Aschroft & Mermin d) S.O. Pillai

ME(EE)411: Thermal Power Engineering
Contacts : 3L
Credits 3

Water Tube & Fire Tube boilers, Circulating Principles, Forced Circulation, Critical pressure, Superheaters, Reheaters, attemperators, induced draught, forced draught and secondary air Fans, Boiler performance analysis and heat balance. Combustion Systems, Environmental Protection – ESP, Cyclone Separator, Dust Collector etc.

Rotary Thermodynamic devices – Steam turbines & their classifications – Impulse & Reaction type Turbines, Thermodynamics of compressible fluid-flow, equation and continuity – Isentropic flow through nozzles, velocity diagram, Blade efficiency, optimum velocity ratio, multi-staging, velocity & pressure compounding, losses in turbines, erosion of turbine blades, turbine governing, performance analysis of turbine, Condensing system.
IC Engines – classification. Analysis of a standard cycle, fuel characteristic of SI & CI Engine, Combustion, Engine performance. Automotive Engine exhaust emission and their control.

Gas turbine Analysis – Regeneration - Reheating, Isentropic efficiency. Combustion efficiency.
Text:

1. P.K.Nag- Engineering Thermodynamics – TMH ,2/e
2. P K Nag- Power Plant Engg. - TMH Pub

3. P.S. Ballaney- Thermal Engineering – Khanna Pub
4. Domkundwar & Arora- Power Plant Engineering –.Dhanpat Rai & Co.

Reference:
1. Cengel --- Thermodynamics , 3/e ,TMH
2. Et-Wakil—Power Plant Engineering , MH
3. M W Zemansky & R.H.Dittman -Heat and Thermodynamics – McGraw Hill ,7/e

CH401: Basic Environmental Engineering & Elementary Biology
Contacts : 3L
Credits : 3

General

Basic ideas of environment, basic concepts, man, society & environment, their interrelationship.

1L

Mathematics of population growth and associated problems, Importance of population study in environmental engineering, definition of resource, types of resource, renewable, non-renewable, potentially renewable, effect of excessive use vis-à-vis population growth, Sustainable Development.

2L

Materials balance: Steady state conservation system, steady state system with non conservative pollutants, step function. 1L

Environmental degradation: Natural environmental Hazards like Flood, earthquake, Landslide-causes, effects and control/management; Anthropogenic degradation like Acid rain-cause, effects and control. Nature and scope of Environmental Science and Engineering.

2L

Ecology

Elements of ecology: System, open system, closed system, definition of ecology, species, population, community, definition of ecosystem- components types and function. 1L

Structure and function of the following ecosystem: Forest ecosystem, Grassland ecosystem, Desert ecosystem, Aquatic ecosystems, Mangrove ecosystem (special reference to Sundar ban); Food chain [definition and one example of each food chain], Food web. 2L

Biogeochemical Cycle- definition, significance, flow chart of different cycles with only elementary reaction [Oxygen, carbon, Nitrogen, Phosphate, Sulphur]. 1L

Biodiversity- types, importance, Endemic species, Biodiversity Hot-spot, Threats to biodiversity, Conservation of

biodiversity. 2L

Syllabus for B.Tech(Electrical Engineering) Up to Fourth

Air pollution and control

Atmospheric Composition: Troposphere, Stratosphere, Mesosphere, Thermosphere, Tropopause and Mesopause. 1L

Energy balance: Conductive and Convective heat transfer, radiation heat transfer, simple global temperature model [Earth as a black body, earth as albedo], Problems. 1L

Green house effects: Definition, impact of greenhouse gases on the global climate and consequently on sea water level, agriculture and marine food.Global warming and its consequence, Control of Global warming. Earth's heat budget. 1L

Lapse rate: Ambient lapse rate Adiabatic lapse rate, atmospheric stability, temperature inversion (radiation inversion). 2L

Atmospheric dispersion: Maximum mixing depth, ventilation coefficient, effective stack height, smokestack plumes and Gaussian plume model. 2L

Definition of pollutants and contaminants, Primary and secondary pollutants: emission standard, criteria pollutant. Sources and effect of different air pollutants- Suspended particulate matter, oxides of carbon, oxides of nitrogen, oxides of sulphur, particulate, PAN. 2L

Smog, Photochemical smog and London smog.

Depletion Ozone layer: CFC, destruction of ozone layer by CFC, impact of other green house gases, effect of ozone modification. 1L

Standards and control measures: Industrial, commercial and residential air quality standard, control measure (ESP. cyclone separator, bag house, catalytic converter, scrubber (ventury), Statement with brief reference). 1L

Water Pollution and Control

Hydrosphere, Hydrological cycle and Natural water.

Pollutants of water, their origin and effects: Oxygen demanding wastes, pathogens, nutrients, Salts, thermal application, heavy metals, pesticides, volatile organic compounds. 2L

River/Lake/ground water pollution: River: DO, 5 day BOD test, Seeded BOD test, BOD reaction rate constants, Effect of oxygen demanding wastes on river[deoxygenation, reaeration], COD, Oil, Greases, pH. 2L

Lake: Eutrophication [Definition, source and effect]. 1L

Ground water: Aquifers, hydraulic gradient, ground water flow (Definition only) 1L

Standard and control: Waste water standard [BOD, COD, Oil, Grease],

Water Treatment system [coagulation and flocculation, sedimentation and filtration, disinfection, hardness and alkalinity, softening]

Waste water treatment system, primary and secondary treatments [Trickling filters, rotating biological contractor, Activated sludge, sludge treatment, oxidation ponds] tertiary treatment definition.

2L

Water pollution due to the toxic elements and their biochemical effects: Lead, Mercury, Cadmium, and Arsenic 1L

Land Pollution

Lithosphere; Internal structure of earth, rock and soil 1L

Solid Waste: Municipal, industrial, commercial, agricultural, domestic, pathological and hazardous solid wastes; Recovery and disposal method- Open dumping, Land filling, incineration, composting, recycling. Solid waste management and control (hazardous and biomedical waste). 2L

Noise Pollution

Definition of noise, effect of noise pollution, noise classification [Transport noise, occupational noise, neighbourhood noise] 1L

Definition of noise frequency, noise pressure, noise intensity, noise threshold limit value, equivalent noise level, L_{10}(18 hr Index) , Ld_n.

Noise pollution control. 1L

Environmental Management:

Environmental impact assessment, Environmental Audit, Environmental laws and protection act of India, Different international environmental treaty/ agreement/ protocol. 2L

References/Books

1. Masters, G. M., “Introduction to Environmental Engineering and Science”, Prentice-Hall of India Pvt. Ltd., 1991.
2. De, A. K., “Environmental Chemistry”, New Age International.

ELECTRIC MACHINE-I

EE-401 Credit: 4 3L+1T

Topic	No of
Module-I	
Electromechanical Energy Conversion Principle, Singly Excited Magnetic System and Doubly Excited Magnetic system, Physical concept of torque	2

Syllabus for B.Tech(Electrical Engineering) Up to Fourth

production; Electromagnetic torque and Reluctance torque. ● Concept of General terms pertaining to Rotating Machines: Electrical & Mechanical degree, Pole pitch, Coil, Generated EMF in full pitched coil, Generated EMF in a short pitched coil, EMF polygon, ● Distribution factor, Pitch factor. MMF produced by Distributed Windings, MMF of a coil, MMF of single phase distributed Winding, MMF waveform of Commutator machines.	2 2

Module-II

DC EMF generated in the armature. Methods of Excitation, Armature reaction & its effect in the performance, Methods of decreasing the effects of Armature reaction, Effect of Brush shift. Commutation process, Resistance commutation, Delayed commutation, Voltage commutation, Improvement of Commutation. Operating Characteristics of DC Generators: Separately Excited generators, Shunt Generators, Series Generators and Compound Generators. Torque equation of D.C motor, Operating Characteristics of Shunt, Series & Compound motors. Losses and efficiency of DC machines, Hopkinson's and Swinburne's test. D.C Machine application: Generator application, Motor application	2 2 2 2 2 1

Module-III

3 Phase Induction Induction motor as a Transformer, Flux and MMF phasors in Induction motors, Equivalent circuit, Performance equations, Induction motor phasor diagram Toque-slip characteristic, Power slip characteristic, Determination of equivalent circuit parameters. Methods of starting of squirrel Cage and Wound rotor Motors. Speed control of Induction motor Polarity Test, Application of Polyphase Induction motor	1 2 2 1 2 1

Module-IV

3 Phase Determination of polarity and connections (star/star, star/delta, delta/star, star/zigzag, delta/zigzag, open delta), Phasor groups. Effect of unbalanced loading, Production of Harmonics in Transformer and its suppression, 3 phase to 2 phase transformation, Scott connection, 3 phase to 6 phase connections, Double star and Double delta, 3 winding transformer: Parameter estimation, application, Parallel operation of Transformers, Introduction to Tap changing transformer and its function. **Special Transformers:** Potential transformer, Current transformer, Pulse transformer, Audio frequency transformer, Grounding transformer, Pulse transformer	3 1 3 2 2

Numerical Problems to be solved in the tutorial classes.

Text Books:

1 Electrical Machinery, P.S. Bhimra, 6th Edition, Khanna Publishers.

2 Electric machines, D.P. Kothari & I.J Nagrath, 3rd Edition, Tata Mc Graw-Hill Publishing Company Limited.
3 Electrical Machines, P.K. Mukherjee & S. Chakrabarty, Dhanpat Rai Publication.

Reference Books:

1. Electric Machinery & Transformers, Bhag S. Guru and H.R. Hiziroglu, 3rd Edition, Oxford University press.
2. Electrical Machines, R.K. Srivastava, Cengage Learning
3. Theory of Alternating Current Machinery, Alexander S Langsdorf, Tata Mc Graw Hill Edition.
4. The performance and Design of Alternating Current Machines, M.G.Say, CBS Publishers & Distributors.
5. Electric Machinery & transformer, Irving L Koskow, 2nd Edition, Prentice Hall India

ELECTRICAL & ELECTRONIC MEASUREMENT

EE-402 Credit: 3 3L

Topic	No of

Module-I

Measurements:	
● Method of measurement, Measurement system, Classification of instruments, Definition of accuracy, Precision, Resolution, Speed of response, Error in measurement, Classification of errors, loading effect due to shunt and series connected instruments.	3
Analog meters:	
● General features, Construction, Principle of operation and torque equation of Moving coil, Moving iron, Electrodynamometer, Induction instruments	3
● Principle of operation of the Electrostatic, Thermoelectric, Rectifier type instruments, Extension of instrument ranges and multipliers.	3

Module-II

Instrument transformer:	
● Disadvantage of shunt and multipliers, Advantage of Instrument transformers, Principle of operation of Current & Potential transformer, errors.	4
Measurement of Power:	
● Principle of operation of Electrodynamic & Induction type wattmeter. Wattmeter errors.	3
Measurement of resistance:	4
● Measurement of medium, low and high resistances, Megger.	

Module-III

Syllabus for B.Tech(Electrical Engineering) Up to Fourth

Measurement of Energy: ● Construction, theory and application of AC energy meter, testing of energy meters.	3
Potentiometer: ● Principle of operation and application of Crompton's DC potentiometer, Polar and Co-ordinate type AC potentiometer. Application.	4
AC Bridges: ● Measurement of Inductance, Capacitance and frequency by AC bridges.	4

Module-IV

Numerical Problems to be solved in the tutorial classes. Text Books:

1. A course in Electrical & Electronic Measurements & Instrumentation, A.K. Sawhney, Dhanpat Rai & sons.
2. Electrical Measurement & Measuring Instruments, E.W. Golding & F.C. Wides, Wheeler Publishing.
3. Electronic Instruments, H.S. Kalsi, Tata Mc-Graw hill, 2nd Edition.

Reference Books:

1. Sensors & Transducers, D. Patranabis, PHI, 2nd edition.
2. Digital Instrumentation, A.J. Bouwens, Tata Mc-Graw hill.
3. Modern Electronic instrumentation & Measuring instruments, A.D. Heltric & W.C. Copper, Wheeler Publication.
4. Instrument transducers, H.K.P. Neubert, Oxford University press.

Practical

Physics Lab-2 Code:PH(EE)491
PH-491
Contacts: (3P)
Credit: (2)

1. Determination of dielectric constant of a given dielectric material.
2. Determination of thermo electric power at a certain temperature of a given thermocouple.
3. Determination of specific charge (e/m) of electron by J.J. Thompson's method.
4. Determination of Planck constant using photocell.
5. Determination of Lande'g factor using Electron spin resonance spectrometer.
6. Determination of Stefen's radiation constant.
7. Verification of Bohr's atomic orbital theory through Frank-Hertz experiment.
8. Determination of Rydberg constant by studying Hydrogen –Helium spectrum.
9. Determination of Hall coefficient of semiconductor.
10. Determination of Band gap of semiconductor.
11. To study current voltage characteristics, load response, areal characteristic and spectral response of a photovoltaic solar cell.

ME(EE)481: Thermal Power Engineering Lab
Contacts : 3L
Credits 3

1. Study of Cut Models – Boilers IC Engines
    - ❖ Lanchashire Boiler
    - ❖ Bahcock & Willcox Boiler
    - ❖ Cochran Boiler
    - ❖ Vertical Tubular Boiler
    - ❖ Locomotive Boiler
    - ❖ 4S Diesel Engine
    - ❖ 4S Petrol Engine
    - ❖ 2S Petrol Engine
2. Load Test on 4 Stroke Petrol Engine & Diesel Engine by Electrical Load Box.
3. Load Test on 4 Stroke Diesel Engine by Rope Brake Dynamometer.
4. Heat Balance on 4 Stroke Diesel Engine by Rope Brake Dynamometer & by Electrical Load Box.
5. Valve Timing Diagram on 4S Diesel Engine Model & 4S Petrol Engine Model.
6. To find the Calorific Value of Diesel Fuel & Coal by Bomb Calorimeter.
7. To find the Flash Point & Fire Point of Petrol & Diesel Fuel.
8. To find the Cloud Point & Pour Point of Petrol & Diesel Fuel.
9. To find Carbon Particle Percentage in Diesel Engine Exhaust Smoke by Smokemeter and trace the BHP

Vs. % Carbon Curve.

10. Measurement of the Quality of Steam – Enthalpy & Dryness fraction.

11. To find out the Boiler performance – Boiler efficiency & Steam evaporation rate.

12. To visit a Thermal Power Station & study of the followings :

a) Boiler b) Steam pipe c) Furnace
d) Economizer e) Preheater f) Steam turbines
g) Alternator h) Water treatment plant i) E. S. P.

ELECTRIC MACHINE LABORATORY-I

EE-491 Creidit: 2 3P

1. Study of the characteristics of a separately excited DC generator.
2. Study of the characteristics of a DC motor
3. Study of methods of speed control of DC motor
4. Study of the characteristics of a compound DC generator (short shunt).
5. Measurement of speed of DC series motor as a function of load torque.
6. Study of equivalent circuit of a single phase transformer.
7. Polarity test on a single phase transformer & study of different connections of three phase transformer.
8. Study of equivalent circuit of three phase Induction motor by no load and blocked rotor test.
9. Study of performance of wound rotor Induction motor under load.
10. Study of performance of three phase squirrel- cage Induction motor –determination of iron-loss, friction & windage loss.

Reference Books:

1. Laboratory experiments on Electrical machines, C.K. Chanda, A. Chakrabarty, Dhanpat Rai & Co.

ELECTRIC AND ELECTRONIC MEASUREMENT LABORATORY

EE-492 Credit: 2 3P

List of Experiments:

1. Instrument workshop- Observe the construction of PMMC, Dynamometer, Electrothermal and Rectifier type of instruments, Oscilloscope and Digital multimeter.
2. Calibrate moving iron and electrodynamometer type ammeter/voltmeter by potentiometer.
3. Calibrate dynamometer type wattmeter by potentiometer.
4. Calibrate AC energy meter.
5. Measurement of resistance using Kelvin double bridge.
6. Measurement of power using Instrument transformer.
7. Measurement of power in Polyphase circuits.
8. Measurement of frequency by Wien Bridge.
9. Measurement of Inductance by Anderson bridge
10. Measurement of capacitance by De Sauty Bridge.
11. Measurement of capacitance by Schering Bridge.

Syllabus for B.Tech(Electrical Engineering) Up to Fourth

SEMESTER – V
Theory

Economics for Engineers HU-501
Contracts: 3L
Credits- 3

1. Economic Decisions Making – Overview, Problems, Role, Decision making process.
2. Engineering Costs & Estimation – Fixed, Variable, Marginal & Average Costs, Sunk Costs, Opportunity Costs, Recurring And Nonrecurring Costs, Incremental Costs, Cash Costs vs Book Costs, Life-Cycle Costs; Types Of Estimate, Estimating Models - Per- Unit Model, Segmenting Model, Cost Indexes, Power-Sizing Model, Improvement & Learning Curve, Benefits.
3. Cash Flow, Interest and Equivalence: Cash Flow – Diagrams, Categories & Computation, Time Value Of Money, Debt repayment, Nominal & Effective Interest.
4. Present Worth Analysis : End-Of-Year Convention, Viewpoint Of Economic Analysis Studies, Borrowed Money Viewpoint, Effect Of Inflation & Deflation, Taxes, Economic Criteria, Applying Present Worth Techniques, Multiple Alternatives.
5. Cash Flow & Rate Of Return Analysis – Calculations, Treatment of Salvage Value, Annual Cash Flow Analysis, Analysis Periods; Internal Rate Of Return, Calculating Rate Of Return, Incremental Analysis; Best Alternative Choosing An Analysis Method, Future Worth Analysis, Benefit-Cost Ratio Analysis, Sensitivity And Breakeven Analysis. Economic Analysis In The Public Sector - Quantifying And Valuing Benefits & drawbacks.
6: Uncertainty In Future Events - Estimates And Their Use In Economic Analysis, Range Of Estimates, Probability, Joint Probability Distributions, Expected Value, Economic Decision Trees, Risk, Risk vs Return, Simulation, Real Options.
7. Depreciation - Basic Aspects, Deterioration & Obsolescence, Depreciation And Expenses, Types Of Property, Depreciation Calculation Fundamentals, Depreciation And Capital Allowance Methods, Straight-Line Depreciation Declining Balance Depreciation, Common Elements Of Tax Regulations For Depreciation And Capital Allowances.
8. Replacement Analysis - Replacement Analysis Decision Map, Minimum Cost Life Of A New Asset, Marginal Cost, Minimum Cost Life Problems.
9. Inflation And Price Change – Definition, Effects, Causes, Price Change With Indexes, Types of Index, Composite vs Commodity Indexes, Use of Price Indexes In Engineering Economic Analysis, Cash Flows that inflate at different Rates.
10. Accounting – Function, Balance Sheet, Income Statement, Financial Ratios Capital Transactions, Cost Accounting, Direct and Indirect Costs, Indirect Cost Allocation.

Readings

1. James L.Riggs,David D. Bedworth, Sabah U. Randhawa : Economics for Engineers 4e , Tata McGraw-Hill
2. Donald Newnan, Ted Eschembach, Jerome Lavelle : Engineering Economics Analysis, OUP
3. John A. White, Kenneth E.Case,David B.Pratt : Principle of Engineering Economic Analysis, John Wiley
4. Sullivan and Wicks: Engineering Economy, Pearson
5. R.Paneer Seelvan: Engineering Economics, PHI
6. Michael R Lindeburg : Engineering Economics Analysis, Professional Pub

ELECTRIC MACHINE-II EE-501

Credit: 4 **Contact: 3L+1T**

Module	Content	Hour
1	**Single Phase Induction Motor:** Construction, Double revolving field theory, Cross field theory, Starting methods, Speed-Torque characteristics, Phasor diagram, Condition of Maximum torque, Determination of equivalent circuit parameters, Testing of Single phase motors, Applications. Single phase AC series motor, Compensated and uncompensated motors.	10

Syllabus for B.Tech(Electrical Engineering) Up to Fourth

2	**Synchronous machines:** Construction, Types, Excitation systems, Generator & Motor modes, Armature reaction, Theory for salient pole machine, Two reaction theory, Voltage regulation (EMF, MMF, ZPF). Operating characteristics of Alternators and their rating. Power angle characteristics of Synchronous machines. Parallel operation of Alternators, Synchronous machine connected to infinite bus, effect of change of excitation and speed of prime mover. Starting of Synchronous motor, V-curve. Damper winding, Hunting. Short circuit transients. Applications.	20
	Special Electromechanical devices: Principle and construction of switched Reluctance motor,	

3	Permanent magnet machines, Brushless DC machines, Hysteresis motor, Stepper motor, Tacho generators, Synchros & resolvers. AC servo motors, Principle, construction and operational characteristics of Induction generator & linear Induction motor.	10

Numerical problems to be solved in the tutorial classes. Text Books:

1. Electrical Machinery, P.S. Bhimra, Khanna Publishers.
2. Electrical Machines, Nagrath & Kothary, TMH
3. Electrical Machines, Theory & Applications, M.N. Bandyopadhyay, PHI

Reference Books:

1. Electric Machinery & Transformer, Bhag S. Guru and H.R. Hiziroglu, 3rd Edition, Oxford University press.
2. Electric Machinery & Transformes, Irving L. Kosow, PHI
3. Electric Machinery, A.E.Fitzgerald, Charles Kingsley,Jr. & Stephen D. Umans, 6th Edition, Tata McGraw Hill Edition.
4. Electrical Machines, R.K. Srivastava, Cengage Learning
5. Theory of Alternating Current Machinery, Alexander S Langsdorf, Tata Mc Graw Hill Edition
6. The performance and Design of Alternating Current Machines, M.G.Say, CBS publishers & distributors.
7. Problems in Electrical Engineering, Parker smith, 9th Edition, CBS publishers & distributors.
8. Electric Machines, Charles A. Gross, CRC press.

ELECTRIAL MACHINES-II LABORATORY EE-591

Credit: 2 **3P**

1. Different methods of starting of a 3 phase Cage Induction Motor & their comparison [DOL, Auto transformer & Star-Delta]
2. Speed control of 3 phase squirrel cage induction motor by different methods & their comparison [voltage control & frequency control].
3. Speed control of 3 phase slip ring Induction motor by rotor resistance control.
4. Determination of regulation of Synchronous machine by

a. Potier reactance method.
b. Synchronous Impedance method.

5. Determination of equivalent circuit parameters of a single phase Induction motor.
6. Load test on single phase Induction motor to obtain the performance characteristics.
7. To determine the direct axis resistance [X_d] & quadrature reactance [X_q] of a 3 phase synchronous machine by slip test.
8. Load test on wound rotor Induction motor to obtain the performance characteristics.
9. To make connection diagram to full pitch & fractional slot winding of 18 slot squirrel cage Induction motor for 6 poles & 4 pole operation.
10. To study the performance of Induction generator.
11. Parallel operation of 3 phase Synchronous generators.
12. V-curve of Synchronous motor

POWER SYSTEM-I EE-502

Credit: 4 **Contact: 3L+1T**

Module	Content	Hour
1	**Overhead transmission line:** Choice of frequency, Choice of voltage, Types of conductors, Inductance and Capacitance of a single phase and three phase symmetrical and unsymmetrical configurations. Bundle conductors. Transposition. Concept of GMD and GMR. Influence of earth on conductor capacitance. **Overhead line construction:** Line supports, Towers, Poles, Sag, Tension and Clearance, Effect of Wind and Ice on Sag. Dampers.	12

	Insulators: Types, Voltage distribution across a suspension insulator string, String efficiency, Arching shield & rings, Methods of improving voltage distribution across Insulator strings, Electrical tests on line Insulators. **Corona:** Principle of Corona formation, Critical disruptive voltage, Visual critical corona discharge potential, Corona loss, advantages & disadvantages of Corona. Methods of reduction of Corona.	10

Syllabus for B.Tech(Electrical Engineering) Up to Fourth

2	**Cables:** Types of cables, cable components, capacitance of single core & 3 core cables, dielectric stress, optimum cable thickness, grading, dielectric loss and loss angle.	
3	**Performance of lines:** Short, medium (nominal , T) and long lines and their representation. A.B.C.D constants, Voltage regulation, Ferranti effect, Power equations and line compensation, Power Circle diagrams.	8
4	**Generation of Electric Power:** General layout of a typical coal fired power station, Hydro electric power station, Nuclear power station, their components and working principles, comparison of different methods of power generation. Introduction to Solar & Wind energy system. **Tariff:** Guiding principle of Tariff, different types of tariff. **Indian Electricity Rule-1956:** General Introduction.	10

Cathode ray oscilloscope (CRO): ● Measurement of voltage, current, frequency & phase by oscilloscope. Frequency limitation of CRO. Sampling and storage oscilloscope, Double beam CRO.	3
Electronic Instruments: ● Advantages of digital meter over analog meters, Digital voltmeter, Resolution and sensitivity of digital meters, Digital multimeter, Digital frequency meter, Signal generator.	4
Sensors & Transducers: ● Introduction to sensors & Transducers, Strain gauge, LVDT, Temperature transducers, Flow measurement using magnetic flow measurement.	3

Numerical problems to be solved in the tutorial classes.

Text Books:

1. Electrical Power System, Subir Roy, Prentice Hall
2. Power System Engineering, Nagrath & Kothery, TMH
3. Elements of power system analysis, C.L. Wodhwa, New Age International.
4. Electrical Power System, Ashfaq Hussain, CBS Publishers & Distributors

Reference Books:

1. Electric Power transmission & Distribution, S.Sivanagaraju, S.Satyanarayana, Pearson Education.
2. A Text book on Power system Engineering, Soni, Gupta, Bhatnagar & Chakrabarti, Dhanpat Rai & Co.
3. Electric Power distribution system Engineering, 2nd Edition, T. Gonen, CRC Press.
4. www.powermin.nic.in/acts_notification/pdf/ier**1956**.pdf

POWER SYSTEM-I LABORATORY EE-592

Credit: 2 **3P**

1. Determination of the generalized constants A.B, C, D of long transmission line.
2. Simulation of DC distribution by network analyzer.
3. Measurement of earth resistance by earth tester.
4. Dielectric strength test of insulating oil.
5. Determination of breakdown strength of solid insulating material.
6. Different parameter calculation by power circle diagram
7. Study of different types of insulator.
8. Active and reactive power control of alternator.
9. Study and analysis of an electrical transmission line circuit with the help of PSPICE.
10. Dielectric constant, tan delta, resistivity test of transformer oil.

CONTROL SYSTEM-I EE-503

Syllabus for B.Tech(Electrical Engineering) Up to Fourth

Credit: 4 **Contact: 3L+1T**

Module	Content	Hour
1	**Introduction to control system:** Concept of feedback and Automatic control, Effects of feedback, Objectives of control system, Definition of linear and nonlinear systems, Elementary concepts of sensitivity and robustness. Types of control systems, Servomechanisms and regulators, examples of feedback control systems. Transfer function concept. Pole and Zeroes of a transfer function. Properties of Transfer function. **Mathematical modeling of dynamic systems:** Translational systems, Rotational systems, Mechanical coupling, Liquid level systems, Electrical analogy of Spring–Mass-Dashpot system. Block diagram representation of control systems. Block diagram algebra. Signal flow graph. Mason's gain formula. **Control system components:** Potentiometer, Synchros, Resolvers, Position encoders. DC and AC tacho-generators. Actuators. Block diagram level description of feedback control systems for position control, speed control of DC motors, temperature control, liquid level control, voltage control of an Alternator.	14
	Time domain analysis: Time domain analysis of a standard second order closed loop system. Concept	

2	of undamped natural frequency, damping, overshoot, rise time and settling time. Dependence of time domain performance parameters on natural frequency and damping ratio. Step and Impulse response of first and second order systems. Effects of Pole and Zeros on transient response. Stability by pole location. Routh-Hurwitz criteria and applications. **Error Analysis:** Steady state errors in control systems due to step, ramp and parabolic inputs. Concepts of system types and error constants.	10
3	**Stability Analysis:** Root locus techniques, construction of Root Loci for simple systems. Effects of gain on the movement of Pole and Zeros. **Frequency domain analysis of linear system:** Bode plots, Polar plots, Nichols chart, Concept of resonance frequency of peak magnification. Nyquist criteria, measure of relative stability, phase and gain margin. Determination of margins in Bode plot. Nichols chart. M-circle and M-Contours in Nichols chart.	12
4	**Control System performance measure:** Improvement of system performance through compensation. Lead, Lag and Lead- lag compensation, PI, PD and PID control.	4

Numerical problems to be solved in the tutorial classes.

Text books:

1. Modern Control Engineering, K. Ogata, 4th Edition, Pearson Education.
2. Control System Engineering, I. J. Nagrath & M. Gopal. New Age International Publication.
3. Control System Engineering, D. Roy Choudhury, PHI
4. Automatic Control Systems, B.C. Kuo & F. Golnaraghi, 8th Edition, PHI

Reference Books:

1. Control Engineering Theory & Practice, Bandyopadhyaya, PHI
2. Control systems, K.R. Varmah, Mc Graw hill
3. Control System Engineering, Norman Nise, 5th Edition, John Wiley & Sons
4. Modern Control System, R.C. Dorf & R.H. Bishop, 11th Edition, Pearson Education.
5. Control System Design, C. Goodwin Graham, F. Graebe F. Stefan, Salgado. ***E.*** Mario, PHI
6. Modeling & Control of dynamic system, Macia & Thaler, Thompson
7. Modern Control Technology Components & Systems, 3rd edition, C.T Kilian, Cengage Learning.
8. Modern Control Engineering, Y. Singh & S. Janardhanan, Cengage Learning
9. Control System Engineering, R. Anandanatarajan & R. Ramesh Babu, , SCITECH
10. Automatic Control system, A. William, Wolovich, Oxford

CONTROL SYSTEM-I LABORATORY EE-593

Credit: 2 **3P**

1. Familiarization with MAT-Lab control system tool box, MAT-Lab- simulink tool box & PSPICE
2. Determination of Step response for first order & Second order system with unity feedback on CRO & calculation of control system specification like Time constant, % peak overshoot, settling time etc. from the response.
3. Simulation of Step response & Impulse response for type-0, type-1 & Type-2 system with unity feedback using MATLAB & PSPICE.
4. Determination of Root locus, Bode plot, Nyquist plot using MATLAB control system tool box for 2nd order system

& determination of different control system specification from the plot.

5. Determination of PI, PD and PID controller action of first order simulated process.
6. Determination of approximate transfer functions experimentally from Bode plot.
7. Evaluation of steady state error, setting time , percentage peak overshoot, gain margin, phase margin with addition of Lead

Syllabus for B.Tech(Electrical Engineering) Up to Fourth

Reference Books:

1. Matlab & Simulink for Engineers, Agam Kumar Tyagt, Oxford
2. Modeling & Simulatrion using Matlab-Similink, Dr. S. Jain, Wiley India
3. Matlab & its application in Engineering, Raj K Bansal, A.K. Goel & M.K. Sharma, Pearson
4. MATLAB programming for Engineers, S.J. Chapman, 3rd Edition, Cengage.

Syllabus for B.Tech(Electrical Engineering) Up to Fourth

DATA STRUCTURE & ALGORITHM EE-504A

Credit: 3 **Contact: 3L**

Module	Content	Hour
1	**Introduction:** Importance of study of Data structure**,** Concept of data structure: Data and data structure, Abstract data type and data type. Algorithm and programs, Basic idea of pseudo-code, Algorithm efficiency and analysis, time and space analysis of algorithms-order notations. Different representation: row major, column major. Sparse matrix, its implementation and usage. Array representation of polynomials. Singly linked list, circular linked list, doubly linked list, linked list representation of polynomial and applications.	08
2	**Stack & queue:** Stack and its implementation, (using array, using linked list) application. Queues, circular queue, dequeue, Implementation of queue- both linear and circular (using array, using linked list) applications. **Recursion:** Principle of recursion- use of stack, difference between recursion and iteration, tail recursion. Application-The Tower of Hanoi, Eight Queen Puzzle.	07
3	**Nonlinear data structure:** **Trees:** Basic terminologies, forest, tree representation (using array, using linked list). Basic trees, binary tree traversal (Pre-,in-,post-order), threaded binary tree(left, right, full), non recursive traversal algorithm using threaded binary tree, expression tree. Binary search tree-operations (creation, insertion, deletion, searching), Height balanced binary tree-AVL tree (insertion, deletion with examples only). B tree orations ((insertion, deletion with examples only) **Graph:** Graph definition and concept, (directed/undirected graph, weighted/un-weighted edges, sub-graph, degree, cut vertex /articulation point, pendant node, clique, complete graph, connected –strongly connected component, weakly connected component-path, shortest path, isomorphism. Graph representation/storage implementation- adjacency matrix, adjacency list, adjacency multi-list. Graph traversal and connectivity- Depth First Search (DFS), Breadth-First Search (BFS), concept of edges used in DFS and BFS (tree-edge, back-edge, cross-edge, and forward-edge, application. Minimal spanning tree-Prim's algorithm (Basic idea of greedy methods)	15
4	**Searching, Sorting:** Sorting algorithm, Bubble sort and optimization, insertion sort, shell sort, selection sort, merge sort, quick sort, heap sort (Concept, of max heap, application-priority queue, radix sort. Searching, sequential search, binary search, interpolation search. Hashing, Hashing functions, collision resolution techniques.	10

Text Books:

1. Data structure using C, Reema Thareja, Oxford.
2. Data structure, S.Lipschutz.
3. Data structure and program design in C, Robert L Krusse, B.P.Leung

Reference Books:

1. Data structure using C++, Varsha H. Patil, Oxford

DATA STRUCRURE & ALGORITHM LABORATORY EE-594A

CREDIT: 2 **3P**

1. Implementation of array operation

2. Stack and queue: adding, deleting elements. Circular Queue: adding & deleting elements, Merging problems .
3. Evaluation of expression operation on multiple stack & queues.

4. Implementation of linked lists, inserting, deleting, inverting a linked list, implementation of stacks & queue using linked list.
5. Polynomial addition, Polynomial multiplication
6. Sparse Matrices, Multiplication, addition
7. Recursive and Nonrecursive traversal of Trees
8. Threaded binery tree traversal. AVL tree implementation.
9. Application of Trees. Application of sorting and searching algorithm.
10. Hash tables implementation, searching, inserting and deleting, searching & sorting techniques.

Experiments mentioned above are not exhaustive. More experiments may be conducted.

COMPUTER ORGANIZATION EE-504B

Credit: 3 **Contact: 3L**

Module	Content	Hour
1	Basic organization of the stored program in computer and operation sequence for execution of a program. Role of operating systems and compiler/ assembler. Fetch, decode and execute cycle. Concept of operator, operand, registers and storage. Instruction format. Instruction sets and addressing modes. Commonly used number systems. Fixed and floating point representation of numbers.	10
2	Overflow and underflow. Design of address- ripple carry and carry look ahead principles. Design of ALU Fixed point multiplication-Booth's algorithm Fixed point division-Restoring and non restoring algorithms. Floating point-IEEE 754 standard.	10
3	Memory unit design with special emphasis on implementation of CPU-memory interfacing. Memory organization. Static and dynamic memory, memory hierarchy, associative memory. Cache memory. Virtual memory. Data path design for read/write access.	10
4	Design of control unit-hardwired and micro programmed control. Introduction to instruction pipelining. Introduction to RISC architecture, RISC vs. CISC architecture. I/O operations-Concepts of handshaking. Polled I/O, Interrupt and DMA.	10

Text Books:

1. Computer System architecture, M.M. Mano, PHI
2. Computer Architecture, P. Behrooz, Oxford University Press.

Reference Books:

1. Computer Architecture & Organization, J.P. Hayes, Mc Graw Hill.
2. Computer Organization, Hamacher, Mc Graw Hill.
3. Computer Organization & design, P. Pal Chaudhuri, PHI
4. Computer Organization & Architecture, P. N. Basu, Vikas Pub.

COMPUTER ORGANIZATION EE-594B

Credit: 2 **3P**

1. Familiarity with IC chips e.g.
   (a) Multiplexer
   (b) Decoder
   (c) Encoder
   (d) Comparator

   Truth table verification and clarification from Data-book.

2. Design an Adder/Sub tractor composite unit.
3. Design a BCD adder
4. Design of a Carry-Look-Ahead Adder circuit.

5. Use of a multiplexer unit to design a composite ALU.
6. Use of an ALU chip for multibit arithmetic operation.

7. Implementations of read write operation using RAM IC.
8. Cascade two RAM ICs for vertical and horizontal expansion.

MICROPROCESSOR & MICROCONTROLLER EE-504C

Credit: 3 **Contact: 3L**

Module	Content	Hour
1	**Introduction to Computer architecture:** Architecture of a typical Microprocessor**,** Bus configuration, The CPU module, ROM & RAM families, Introduction to assembly language & machine language programming, Instruction set of typical microprocessor (e.g. 8085), Subroutine & stack, Timing diagram, Memory Interfacing, Interfacing input output- port, Interrupt & interrupt handling, Serial & parallel data transfer scheme, Programmed & interrupt driven data transfer, Direct memory access, Programmable peripheral devices, Programmable interval timer, Analog input-output using AD & DA converter.	23
2	**Assembly language programme of a typical Microprocessor:** Use of compilers, assembler, linker & debugger.	5
3	**Basic 16 bit Microprocessor (e.g. 8086):** Architecture, Min-max mode.	4
4	Introduction to microcontroller: Architecture & instruction set of a typical microcontroller (e.g. PIC16F84 device), Feature of popular controller (processor 8031/8051), its programming & interfacing.	8

Text Books:

1. Microprocessor architecture, programming & application with 8085, R. Gaonker, Penram International.
2. Advanced Microprocessors and Peripheral, Ajay Kumar Ray, Koshor M Bhurchandi, Tata MC Graw hill Publishing Company.
3. Microprocessor & Interfacing, D.V. Hall, Mc Graw Hill.
4. The 8051 microcontroller, Ayala, Thomson.

Reference Books:

1. Advanced Microprocessors, Y. Rajasree, New Age international Publishers.
2. An introduction to the Intel family of Microprocessors, James L. Antonakos, Pearson Education,
3. The 8051 Microcontroller and Embedded systems, Muhammad Ali Mazidi & J. G. Mazidi, Pearson Education.
4. The 8086 Microprocessors: Programming & Interfacing the PC, K.J.Ayala, Thomson.
5. Microprocessor & Peripherals, S.P. Chowdhury & S. Chowdhury, Scitech.
6. Microchip technology data sheet, www.microchip.com

MICROPROCESSOR & MICROCONTROLER LABORATORY EE-594C

Credit: 2 **3P**

1. Familiarization with 8085 register level architecture and trainer kit components including the memory map. Familiarization with process of storing and viewing the contents of memory as well as registers.
2. (a) Study of prewritten program on trainer kit using the basic instruction set (data transfer, load/store, arithmetic, logical)
   (b) Assignment based on that.
3. (a) Familiarization with 8085 simulator on PC
   (b) Study of prewritten program using basic instruction set (data transfer, load/store, arithmetic, logical).
   (c) Assignment based on that.
4. Programming using kit/simulator.
   (a) Lookup table
   (b) Copying a block of memory

(c) Shifting a block of memory.
(d) Packing and unpacking of BCD numbers.

(e) Addition of BCD number
(f) Binary to ASCII conversion
(g) String matching

5. Program using subroutine calls and using IN/OUT instruction using 8255 PPI on the trainer kit e.g. subroutine for delay, reading switch state and glowing LEDs accordingly, finding out frequency of pulse train etc.
6. Interfacing any 8 bit latch (74LS373) with trainer kit as a peripheral mapped output port with absolute address decoding.
7. Interfacing with I/O module :
   (a) ADC
   (b) Speed control of DC motor with DAC
   (c) Keyboard
   (d) Multi digit display with multiplexing.
   (e) Stepper motor
8. Study of 8031/8051 Micro controller kit and writing program for the following task using the kit
   (a) table look up
   (b) basic arithmetic and logical operation
   (c) interfacing of keyboard and stepper motor.

SEMESTER – VI

PRINCIPLE OF MANAGEMENT HU-601

Credit: 2 **Contact: 2L**

Module	Content	Hour
1	**Basic concepts of management**: Definition – Essence, Functions, Roles, Level. **Functions of Management**: Planning – Concept, Nature, Types, Analysis, Management by objectives; Organization Structure – Concept, Structure, Principles, Centralization, Decentralization, Span of Management; Organizational Effectiveness.	05
2	**Management and Society** – Concept, External Environment, CSR, Corporate Governance, Ethical Standards. **People Management** – Overview, Job design, Recruitment & Selection, Training & Development, Stress Management. **Managerial Competencies** – Communication, Motivation, Team Effectiveness, Conflict Management, Creativity, Entrepreneurship	05
3	**Leadership:** Concept, Nature, Styles. **Decision making**: Concept, Nature, Process, Tools & techniques. **Economic, Financial & Quantitative Analysis** – Production, Markets, National Income Accounting, Financial Function & Goals, Financial Statement & Ratio Analysis, Quantitative Methods – Statistical Interference, Forecasting, Regression Analysis, Statistical Quality Control.	05
4	**Customer Management** – Market Planning & Research, Marketing Mix, Advertising & Brand Management. **Operations & Technology Management** – Production & Operations Management, Logistics & Supply Chain Management, TQM, Kaizen & Six Sigma, MIS.	05

Text Books:

1. Management: Principles, Processes & Practices – Bhat, A & Kumar, A (OUP).
2. Essentials for Management – Koontz, Revised edition, Tata McGraw Hill (TMH)
3. Management – Stoner, James A. F. (Pearson)
4. Management - Ghuman, Tata McGraw Hill(TMH)

Syllabus for B.Tech(Electrical Engineering) Up to Fourth

CONTROL SYSTEM-II EE-601

Syllabus for B.Tech(Electrical Engineering) Up to Fourth

Credit: 4 **Contact: 3L+1T**

Module	Content	Hour
1	**State variable model of continuous dynamic systems:** Converting higher order linear differential equations into State Variable (SV) form. Obtaining SV model from Transfer Function. Obtaining characteristic equation and transfer functions from SV model. Obtaining SV equation directly for R-L-C and spring-mass- dashpot systems. Concept and properties associated with state equations. Linear transformations on state variables. Canonical forms of SV equations. Companion forms. Solutions of state equations. State transition matrix, properties of state transition matrix. Controllability and Observability. Linear state variable feedback controller, the pole allocation problems. Linear system design by state variable feedback.	15
2	**Analysis of discrete time (sampled data) systems using Z-transform:** Difference equation. Inverse Z transforms. Stability and damping in Z domain. Practical sampled data systems and computer control system. Practical and theoretical samplers. Sampling as Impulse modulation. Sampled spectra and aliasing. Anti-aliasing filters. Zero order hold. Approximation of discrete (Z-domain) controllers with ZOH by Tustin transform and other methods. State variable analysis of sampled data system. Digital compensator design using frequency response.	10
3	**Introduction to nonlinear systems:** Block diagram and state variable representation of nonlinear systems. Characteristics of common nonlinearities. Phase plane analysis of linear and nonlinear second order systems. Methods of obtaining phase plane trajectories by graphical method, isoclines method. Qualitative analysis of simple control systems by phase plane methods. Describing function analysis. Limit cycles in nonlinear systems. Prediction of limit cycles using describing function technique. Stability concepts for nonlinear systems. BIBO Vs state stability. Definitions of Lyapunov functions. Lyapunov analysis of LTI systems, Asymptotic stability, Global asymptotic stability. The first and second methods of Lyapunov to analyze nonlinear systems.	15

Problems based on the topics to be solved in the tutorial classes Text Books:

1. Control System Engineering, D. Roy Chowdhuri, PHI
2. Control system Engineering, I.J. Nagrath & M. Gopal, New Age International.
3. Digital Control & State Variable Methods, M. Gopal, 2nd Edition, TMH
4. Introduction to Control Systems, D.K. Anand & R.B. Zmood , 3rd Edition, (Butterworth-Heinemann) Asian Books.

. **Reference Books:**

1. Control System Design, Goodwin, Pearson Education.
2. Nonlinear Control system, J.E. Gibson, Mc Graw Hill Book Co.
3. Control theory & Practice, M.N. Bandyopadhyaya, PHI
4. Digital Control system, B.C. Kuo, Oxford University Press.
5. Digital Control System, C.H. Houpis, Mc Graw Hill International.
6. Discrete Time control system, K. Ogata, Prentice Hall, 1995
7. Sampled Data Control system, E.I. Jury, John Wiley & Sons Inc.
8. System Dynamics and Control, Eronini Umez, Eronini, Thomson
9. Modern Control system, R.C. Dorf & R.H. Bishop, Pearson Education
10. Control Engineering, Ramakalyan, Vikas
11. Control System R\Engineering, A. Natarajan Reddy, Scitech
12. Control System Theory with Engineering Application, Lyshevski, Jaico

POWER SYSTEM-II EE-602

Syllabus for B.Tech(Electrical Engineering) Up to Fourth

Credit: 4 **Contact: 3L+1T**

Syllabus for B.Tech(Electrical Engineering) Up to Fourth

Module	Content	Hour
1	**Representation of Power system components:** Single-phase representation of balanced three phase networks, the one-line diagram and the impedance or reactance diagram, per unit (PU) system.	02
2	**Distribution substation:** Types of substations, location of substations, substation equipments and accessories, earthling (system & equipment), feeder and distributors, radial and loop systems.	06
3	**Load flow studies:** Network model formulation, formation of Y_{bus} , load flow problem, Gauss-Siedel method, Newton-Raphson method, Decoupled load flow studies, comparison of load flow methods.	08
4	**Faults in Electrical systems:** Transient on a transmission line, short circuit of a synchronous machine under no load & loaded condition. Symmetrical component transformation, sequence impedance and sequence network of power system, synchronous machine, transmission lines and transformers. Symmetrical component analysis of unsymmetrical faults, single line-to –ground fault, line-to-line fault, double line-to- ground fault.	08
5	**Power system stability:** Steady state stability, transient stability, equal area criteria, swing equation, multi machine stability concept,	04
6	**Power system protection:** Protective zones, Relaying elements and quantities. Protective relays, basic requirements and type of protection, phase and amplitude comparator, grading (time & current), classification of Electromagnetic relays, Directional relay, Distant relay, Differential relay, basic aspects of static and digital relays, relay protection scheme for transformer, feeder, generators and motors. Circuit breakers, circuit breaking transients, transient recovery voltage, current chopping and resistance switching, circuit breaker rating, arc and arc extinction, circuit breaker types, oil circuit breaker, vacuum circuit breaker, air blast circuit breaker, SF_6 circuit breaker and operating mechanism, advantages and disadvantages of different types.	16

Problems based on the topics to be solved in the tutorial classes Text Books:

1. Modern Power System Analysis, D.P. Kothari & I.J. Nagrath, 4th Edition, Tata McGraw Hill.
2. Electrical Power Systems, Subir Ray, PHI
3. Switchgear protection and power systems, Sunil S Rao, Khanna Publications.
4. A text book on Power System Engineering, M.L.Soni, P.V.Gupta, U.S. Bhatnagar & A. Chakrabarti, Dhanpat Rai & CO.

Reference Books:

1. Protection & Switchgear, B. Bhalja, R.P. Maheshwari, N.G.Chothani, Oxford.
2. Power system protection & switchgear, B.Ram & D.N. Vishwakarma, Tata McGraw Hill.
3. Handbook of Electrical Power Distribution, G. Ramamurthy, University Press
4. Electric Power Transmission and Distribution, S. Sivanagaraju, S.Satyanarayana, Pearson Education.
5. Power Systems Stability, Vol. I,II & II, E.W. Kimbark, Wiley.
6. Power Engineering, D.P Kothari & I.J. Nagrath, Tata McGraw Hill.
7. Power Systems Analysis, A. R. Bergen & V. Vittal, Pearson Education.
8. Computer Aided Power systems analysis, Dr. G. Kusic, CEC press.

POWER ELECTRONICS EE-603

Credit: 4 **Contact: 3L+1T**

Module	Content	Hour

Syllabus for B.Tech(Electrical Engineering) Up to Fourth

1	**Introduction:** Concept of power electronics, application of power electronics, uncontrolled converters, advantages and disadvantages of power electronics converters, power electronics systems, power diodes, power transistors, power MOSFETS, IGBT and GTO.	04
2	**PNPN devices:** Thyristors, brief description of members of Thyristor family with symbol, V-I characteristics and applications. Two transistor model of SCR, SCR turn on methods, switching characteristics, gate characteristics, ratings, SCR protection, series and parallel operation, gate triggering circuits, different commutation techniques of SCR.	05
3	**Phase controlled converters:** Principle of operation of single phase and three phase half wave, half controlled, full controlled converters with R, R-L and RLE loads, effects of free wheeling diodes and source inductance on the performance of converters. External performance parameters of converters, techniques of power factor improvement, single phase and three phase dual converters.	06
4	**DC-DC converters:** Principle of operation, control strategies, step up choppers, types of choppers circuits based on quadrant of operation, performance parameters, multiphase choppers and switching mode regulators.	05
5	**Inverters:** Definition, classification of inverters based on nature of input source, wave shape of output voltage, method of commutation & connections. Principle of operation of single phase and three phase bridge inverter with R and R-L loads, performance parameters of inverters, methods of voltage control and harmonic reduction of inverters. Brief idea of Resonant Pulse inverters.	10
6	**AC controllers:** Principle of on-off and phase control, single phase and three phase controllers with R and R-L loads. Principle of operation of cycloconverters, circulating and non circulating mode of operation, single phase to single phase step up and step down cycloconverters, three phase to single phase Cycloconverters, three phase to three phase Cycloconvetter.	06
7	**Applications:** Speed control of AC and DC motors. HVDC transmission. Static circuit breaker, UPS, static VAR controller.	04

Problems based on the topics to be solved in the tutorial classes Text Books:

1. Power Electronics, M.D. Singh and K.B. Khanchandani, Tata Mc Graw Hill. 2007
2. Power Electronics, V.R. Moorthi, Oxford, 2005
3. Power Electronics, M.H. Rashid, PHI, 3rd Edition
4. Power Electronics, P.S. Bhimra, Khanna Publishers, 3rd Edition.

Reference Books:

1. Modern Power Electronics & AC drives, B.K. Bose, Prentice Hall
2. Power Electronics, Mohan,Undeland & Riobbins, Wiley India
3. Element of power Electronics, Phillip T Krein, Oxford, 2007
4. Power Electronics systems, J.P. Agarwal, Pearson Education, 2006
5. Power Electronics, M.S. Jamal Asgha, PHI, 2007
6. Analysis of Thyristor power conditioned motor, S.K. Pillai, University Press.
7. Power Electronics : Principles and applications, J.M. Jacob, Thomson

SOFTWARE ENGINEERING EE-604(a)

Syllabus for B.Tech(Electrical Engineering) Up to Fourth

Credit: 3 **Contact: 3L**

Module	Content	Hour

1	**Overview of system analysis & design**: Business system concept, System development life cycle, waterfall model, Spiral Model, Feasibility Analysis, Technical feasibility, Cost- benefit Analysis, COCOMO model.	10
2	**System design:** Context diagram and DFD, Problem partitioning, Top down and bottom up design, decision tree, decision table and structured English, Functional Vs object oriented approach.	05
3	**Testing:** Levels of testing, Integration testing, Test case specification, Reliability assessment, Validation & Verification metrics, Monitoring & control	08
4	**System project management:** Project scheduling, Staffing, software configuration management, Quality assurance, Project monitoring.	07
5	**Fundamentals of Object oriented design in UML:** Static and dynamic models, necessity of modeling, UML diagrams, Class diagrams, Interaction diagrams, Collaboration diagram, Sequence diagram, State chart diagram, Activity diagram, Implementation diagram.	10

Text Books:

1. Software Engineering, R.G. Pressman, TMH
2. Software Engineering Fundamental, Behforooz, OUP
3. Software Engineering, Ghezzi, PHI

Reference Books:

1. An integrated approach to Software Engineering, Pankaj Jalote, Narosa
2. Software quality, Benmenachen, Vikas
3. IEEE standard on Software Engineering.
4. Software defect Prevention, Kane, SPD.
5. Essentials of Software Engineering, Uma, Jaico

DATA BASE MANAGEMENT SYSTEM EE-604 (b)

Credit: 3 **Contact: 3L**

Module	Content	Hour
1	**Introduction:** Concept & Overview of DBMS, Data model, Database language, Database administrator, Database users, Three Schema architecture of DBMS.	04
2	**Entity-Relationship Model:** Basic concepts, Design Issues, Mapping Constraints, Keys, Entity-Relationship Diagram, Weak Entity sets, Extended E-R features.	05
3	**Relational Model:** Structure of relational Databases, Relational Algebra, Relational; calculus, Extended Relational Algebra operations, Views, Modification of the Database.	05
4	**SQL and Integrity Constraints:** Concept of DDL, DML, DCL. Basic structure, Set operations, Aggregate functions, Null values, Domain constraints, Referential integrity, Constraints, assertions, views, Nested sub queries, Data base security application development using SQL, Stored procedures and triggers.	06

5	**Relational Database design:** Functional dependency, Different anomalies in designing a Database, Normalization using functional dependencies, Decomposition, Boyce-Codd normal form, 3NF, Normalization	09

	using multi-valued dependencies, 4NF, 5 NF.	
6	**Internal of RDBMS:** Physical data structures, Query optimization: join algorithm, statistics and cost base optimization, Transaction processing, Concurrency control and recovery management: transaction model properties, state serializability, look base protocols, two phase locking.	06
7	**File organization & index structures** File & records concepts, Placing file records on disk, Fixed and variable sized recotds, Types of single –Level index (primary. Secondary, clustering), Multilevel Indexes, Dynamic multilevel indexes using B tree and B+ tree.	05

Text Books:

1. Database System Concepts, F. Henry & Abraham Silderscharz, Mc Graw Hill.
2. Database Management system, Ramakrishnan, Mc Graw Hill.
3. Principles of Database Systems, J.D. Ullman, Galgotia Publication.

Reference Books:

1. Principles of Database Management Systems. Martin James. PHI.
2. Database management Systems, A.K. Majumder & Pritimay bhattacharjya, Tata Mc Graw Hill.

OBJECT ORIENTED PROGAMMING EE-604(c)

Credit: 3 **Contact: 3L**

Module	Content	Hour
1	**Object oriented Design:** Concept of Object oriented programming language, Major and minor elements, Object, Class, relationship among objects, aggregation, links, relationship among classes- association, aggregation using instantiation, meta-class, grouping constructs.	10
2	**Object oriented concept:** Difference between OOP and other conventional programming, advantages and disadvantages. Class, object, message passing, inheritance, encapsulation, polymorphism.	04

3	**Basic concepts of Object oriented programming using Java:** Class & Object properties: Basic concepts of Java programming-advantages of Java, byte- code & JVM, data types, access specifiers, operators, control statements & loops, array, creation of class, object, constructor, finalize and garbage collection, use of method overloading, this keyword, use of objects as parameter & methods returning objects, call by value & call by reference, static variables & methods, garbage collection, nested and inner classes, basic string handling concepts, -String (discuss char(), compare(), equals(), equalsIgnorecase(), indexOf(), length(), substring(), toCharArray(),toLowercCase(), tostring(), methods), concept of mutable and immutable string, command line arguments, basics of I/O operations-keyboard input using BufferedReader & Scanner classes. Reusability properties: Super class & subclasses including multilevel hierarchy, process of constructor calling in inheritance, use of super and final keywords with super() method, dynamic method dispatch, use of abstract classes, & methods, interfaces. Creation of packages, importing packages, member access for packages. Exception handling & Multithreading : Exception handling basics, different types of exception classes, use of try & catch with throw, throws & finally, creation of user defined exception classes. Basics of multithreading, main thread, thread life cycle, creation of multiple threads, thread synchronization, inter thread communication, deadlocks for threads, suspending & resuming threads.	26

	Applet Programming (using swing): Basics of applet programming, applet life cycle, difference between application & applet programming, parameter passing in applet in applets, concept of delegation event model and listener, I/O in applets, use of repaint(), getDocumentBase(), getCodeBase() methods, layout manager (basic concept), creation of buttons (JButton class only) & text fields.	

Text Books:

1. Object Oriented Modeling and design, James Rambaugh & Michael Blaha, PHI.
2. Object Oriented Programming with C++ and Java, D. Samanta, PHI
3. Programming with Java: A Primer, E. Balagurusamy, TMH.

Reference Books:

1. Object oriented system Development, Ali Bahrami, Mc Graw Hill.
2. The complete reference Java2, Patrick Naughton & Herbert Schildt, TMH

EMBEDDED SYSTEMS EE-604(d)

Credit: 3 **Contact: 3L**

Module	Content	Hour
1	**Introduction to Embedded systems:** Introduction – Features – Microprocessors – ALU - Von Neumann and Harvard Architecture - CISC and RISC - Instruction pipelining. Microcontroller: characteristics and Features, Overview and architectures of Atmel 89C52 and Microchip PIC16F877 and 18F452. Examples of embedded Systems: Bar-code scanner, Laser printer, Underground tank monitoring.	10
2	**PIC Microcontroller:** PIC Microcontrollers: 16F877 Architecture and Instruction Set. External Interrupts, Timers, watch-dog timer, I/O port Expansion, analog-to-digital converter, UART, I2C and SPI Bus for Peripheral Chips, Accessories and special features	08
3	**Software architecture and RTOS:** Software Architecture: Round Robin- Round Robin with interrupts -Function Queue. Scheduling Architecture RTOS: Architecture -Tasks and Task States -Tasks and Data -Semaphores and Shared Data - Message Queues -Mail Boxes and pipes -Timer Functions -Events -Memory Management Interrupt Routines	08
4	**Basic design using a real time operating system:** Overview. General principles. Design of an embedded system.	6
5	**Software development tools and debugging techniques:** Development Tool: Cross-Compiler, Cross-Assemblers, Linker/locator. PROM Programmers, ROM Emulator, In-Circuit Emulators. Debugging Techniques. Instruction set simulators. The assert macro. Testing using laboratory tools.	08

Text Books:

1. Embedded Systems Architecture, Programming and Design, Ral KamalTMH, 2008.

2. An Embedded Software Primer, D.E. Simon. Pearson Education, 1999.
3. Design with PIC Microcontrollers, J.B. Peatman,Pearson Education, 1998

Syllabus for B.Tech(Electrical Engineering) Up to Fourth

Reference Books:

1. Embedded Systems Design, Heath Steve, Second Edition-2003, Newnes,
2. Computers as Components; Principles of Embedded Computing System Design, Wayne Wolf Harcourt India, Morgan Kaufman Publishers, First Indian Reprint. 2001.
3. Embedded Systems Design – A unified Hardware /Software Introduction, Frank Vahid and Tony Givargis, John Wiley, 2002.

DIGITAL SIGNAL PROCESSING EE-605(a)

Credit: 3 **Contact: 3L**

Module	Content	Hour
1	**Discrete-time signals:** Concept of discrete-time signal, basic idea of sampling and reconstruction of signal, sampling theorem, sequences,-periodic, energy, power, unit-sample, unit step, unit ramp & complex exponentials, arithmetic operations on sequences. **LTI systems:** Definition, representation, impulse response, derivation for the output sequence, concept of convolution, graphical, analytical and overlap-add methods to compute convolution supported with examples and exercise, properties of convolution, interconnection of LTI systems with physical interpretations, stability and causality conditions, recursive and non recursive systems.	10

2	**Discrete Time Fourier Transform(DTFT):** Concept of frequency in discrete and continuous domain and their relationship (radian and radian/sec), freq. response in the discrete domain. Discrete system's response to sinusoidal/complex inputs (DTFT), Representation of LTI systems in complex frequency domain**.** **Z- Transforms:** Definition, mapping between s-plane & z-plane, unit circle, convergence and ROC, properties of Z-transform, Z-transform on sequences with examples & exercises, characteristic families of signals along with ROC, convolution, correlation and multiplication using Z- transform, initial value theorem, Perseval's relation, inverse Z- transform by contour integration, power series & partial-fraction expansions with examples and exercises. **Discrete Fourier Transform:** Concept and relations for DFT/IDFT, Relation between DTFT & DFT. Twiddle factors and their properties, computational burden on direct DFT, DFT/DFT as linear transformation, DFT/IDFT matrices, computation of DFT/IDFT by matrix method, multiplication of DFTs, circulation convolution, computation of circular convolution by graphical, DFT/IDFT and matrix methods, linear filtering using DFT, aliasing error, filtering of long data sequences-Overlap-Save and Overlap-Add methods with examples and exercises. **Fast Fourier Transforms:**	15

	Radix-2 algorithm, decimation-in-time, decimation-in-frequency algorithm, signal flow graph, Butterflies, computations in one place, bit reversal, examples for DIT & DIF FFT Butterfly computations and exercises.	
3	**Filter design:** Basic concepts of IIR and FIR filters, difference equations, design of Butterworth IIR analog filter using impulse invariant and bilinear transform, design of linear phase FIR filters no. of taps, rectangular, Hamming and Blackman windows. Effect of quantization.	07
4	**Digital Signal Processor:** Elementary idea about the architecture and important instruction sets of TMS320C 5416/6713 processor, writing of small programs in assembly Language. **FPGA:** Architecture, different sub-systems, design flow for DSP system design, mapping of DSP alrorithms onto FPGA.	08

Numerical problems to be solved

Text Books:

1. Digital Signal Processing-A computer based approach, S. Mitra, TMH
2. Digital Signal Processing: Principles, Algorithms & Application, J.C. Proakis & M.G. Manslakis, PHI
3. Fundamental of Digital Signal Processing using MATLAB , Robert J. Schilling, S.L. Harris, Cengage Learning.
4. Digital Signal Processing-implementation using DSP microprocessors with examples from TMS320C54XX, Avtar Singh & S. Srinivasan, Cengage Leasrning

Reference Books:

1. Digital Signal Processing, Chen, OUP
2. Digital Signal Processing, Johnson, PHI
3. Digital Signal Processing using MATLAB, Ingle, Vikas.
4. Digital Signal Processing, Ifeachor, Pearson Education.
5. Digital Signal Processing, A.V. Oppenhein & R.W. Shaffer, PHI
6. Theory and application of Digital Signal Processing, L.R. Rabiner & B. Gold, PHI
7. Digital Signal Processing, Ashok Ambarder, Cengage Learning.
8. Digital Signal Processing, S. Salivahanan, A. Vallavaris & C. Gnanpruja, TMH.
9. Xilinx FPGA user manual and application notes.

COMMUNICATION ENGINEERING EE-605(b)

Credit: 3 **Contact: 3L**

Module	Content	Hour

Syllabus for B.Tech(Electrical Engineering) Up to Fourth

1	**Elements of communication system:** The elements of a communication system, origin of noise and its effect, importance of SNR in system design. Basic principle of linear (AM) modulation, Generation of AM waves, Demodulation of AM wave. Basic principle of nonlinear (FM, PM) modulation. Generation of FM waves. Demodulation of FM waves. Sampling theorem, sampling rate, impulse sampling, reconstruction from samples, Aliasing. Analog pulse modulation-PAM (natural & flat topped sampling), PWM, PPM. Basic concept of Pulse code modulation, Block diagram of PCM, Multiplexing-TDM, FDM.	12
	Digital transmission: Concept of Quantization & Quantization error, Uniform quantizer, Non-uniform quantizer,	08

2	A-law and -law. Encoding, coding efficiency. Line coding & properties, NRZ & RZ, AMI, Manchester coding, PCM, DPCM. Base band pulse transmission, Matched filter, error rate due to noise, ISI, Raised cosine function, Nyquist criterion for distortion-less base band binary transmission, Eye pattern, Signal power in binary digital signal.	
3	**Digital carrier modulation & demodulation technique:** Bit rate, Baud rate, Information capacity, Shanon's limit, M-ary encoding, Introduction to the different digital modulation techniques-ASK.FSK, PSK, BPSK, QPSK, mention of 8 BPSK, 16 BPSK. Introduction to QAM, basic of 8 QAM, 16 QAM. Basic concept of Delta modulating, Adaptive delta modulation. Introduction to the concept DPCM. Basic concept of spread spectrum modulation.	12
4	**Introduction to coding theory:** Introduction, News value & Information content, Entropy, Mutual information, Information rate, Shanon-Fano algorithm for encoding, Shanon's theorem- source coding theorem, Channel coding theorem, Information capacity theorem. Basic principle of Error control & coding.	8

Numerical problems to be solved in the class. Text Books:

1. An Introduction to Analog and Digital communication, Simon Haykin, Wiely India.
2. Analog communication system, P. Chakrabarti, Dhanpat Rai & Co.
3. Principle of digital communication, P. Chakrabarti, Dhanpat Rai & Co.
4. Modern Digital and Analog Communication systems, B.P. Lathi, Oxford university press

Reference Books:

1. Digital and Analog communication Systems, Leon W Couch II, Pearson Education Asia.
2. Communication Systems, A.B. Calson, Mc Graw Hill.

VLSI & MICROELECTRONICS EE-605(c)

Credit: 3 **Contact: 3L**

Module	Content	Hour
1	**Introduction to VLSI Design**: VLSI Design Concepts, Moor's Law, Scale of Integration (SSI, MSI, LSI, VLSI, ULSI – basic idea only), Types of VLSI Chips (Analog & Digital VLSI chips, General purpose, ASIC, PLA, FPGA), Design principles (Digital VLSI – Concept of Regularity, Granularity etc), Design Domains (Behavioral, Structural, Physical), Y-Chart, Digital VLSI Design Steps.	8

2	**MOS structure**: E-MOS & D-MOS, Charge inversion in E-MOS, Threshold voltage, Flat- band voltage, Potential balance & Charge balance, Inversion, MOS capacitances. **Three Terminal MOS Structure:** Body effect. **Four Terminal MOS Transistor**: Drain current, I-V characteristics. Current-voltage equations (simple derivation). **Scaling in MOSFET**: Short Channel Effects, General scaling, Constant Voltage & Field scaling.] **CMOS**: CMOS inverter, Simple Combinational Gates - NAND gate and NOR Gate using CMOS.	12
3	**Micro-electronic Processes for VLSI Fabrication**: Silicon Semiconductor Technology- An Overview, Wafer processing, Oxidation, Epitaxial deposition, Ion-implantation & Diffusion, Cleaning, Etching, Photo-lithography – Positive & Negative photo-resist	10

	Basic CMOS Technology – (Steps in fabricating CMOS), Basic n-well CMOS process, p-well CMOS process, Twin tub process, Silicon on insulator **Layout Design Rule**: Stick diagram with examples, Layout rules.	
4	**Hardware Description Language** – VHDL or Verilog Combinational & Sequential Logic circuit Design.	10

Text Books:

1. Digital Integrated Circuit, J.M.Rabaey, Chandrasan, Nicolic, Pearson Education.
2. CMOS Digital Integrated Circuit, S.M.Kang & Y.Leblebici, TMH.
3. Modern VLSI Design, Wayne Wolf, Pearson Education.
4. VHDL, Bhaskar, PHI.
5. Advance Digital Design Using Verilog , Michel D. Celliti, PHI

References:

1. Digital Integrated Circuits, Demassa & Ciccone, John Willey & Sons .
2. Modern VLSI Design: system on silicon, Wayne Wolf; Addison Wesley Longman Publisher
3. Basic VLSI Design, Douglas A. Pucknell & Kamran Eshranghian, PHI
4. CMOS Circuit Design, Layout & Simulation, R.J.Baker, H.W.Lee, D.E. Boyee, PHI

CONTROL SYSTEM-II LABORATORY EE-691

Credit: 2 **Contact: 3P**

List of Experiments:

1. Study of a practical position control system obtaining closed step responses for gain setting corresponding to over-damped and under-damped responses. Determination of rise time and peak time using individualized components by simulation. Determination of un-damped natural frequency and damping ration from experimental data.
2. Tuning of P, PI and PID controller for first order plant with dead time using Z-N method. Process parameters (time constant and delay/lag) will be provided. The gain of the controller to be computed by using Z-N method. Steady state and transient performance of the closed loop plant to be noted with and without steady disturbances. The theoretical phase margin and gain margin to be calculated manually for each gain setting.
3. Design of Lead, Lag and Lead-Lag compensation circuit for the given plant transfer function. Analyze step response of the system by simulation.
4. Obtain Transfer Function of a given system from State Variable model and vice versa. State variable analysis of a physical system - obtain step response for the system by simulation.
5. State variable analysis using simulation tools. To obtain step response and initial condition response for a single input, two-output system in SV form by simulation.
6. Performance analysis of a discrete time system using simulation tools. Study of closed response of a continuous system with a digital controller and sample and hold circuit by simulation.
7. Study of the effects of nonlinearity in a feedback controlled system using time response. Determination of step response with a limiter nonlinearity introduced into the forward path of 2nd order unity feedback control systems. The open loop plant will have one pole at the origin and other pole will be in LHP or RHP. To verify that
   (i) with open loop stable pole, the response is slowed down for larger amplitude input
   (ii) for unstable plant, the closed loop system may become oscillatory with large input amplitude by simulation
8. Study of effect of nonlinearity in a feedback controlled system using phase plane plots. Determination of phase plane trajectory and possibility of limit cycle of common nonlinearities.

Institute may develop experiments based on the theory taught in addition to experiments mentioned.

Reference Books:

5. Matlab & Simulink for Engineers, Agam Kumar Tyagt, Oxford
6. Modeling & Simulatrion using Matlab-Similink, Dr. S. Jain, Wiley India
7. Matlab & its application in Engineering, Raj K Bansal, A.K. Goel &

Syllabus for B.Tech(Electrical Engineering) Up to Fourth

M.K. Sharma, Pearson

8. MATLAB programming for Engineers, S.J. Chapman, 3rd Edition, Cengage.

POWER SYSTEM-II LABORATORY EE-692

Credit: 2 **Contact: 3P**

List of Experiments:

1. Study of the characteristics of on delay relay and off delay relay.
2. Test to find out polarity, ratio and magnetization characteristics of CT and PT.
3. Test to find out characteristics of
   (a) under voltage relay
   (b) earth fault relay.
4. Study on DC load flow
5. Study on AC load flow using Gauss-seidel method
6. Study on AC load flow using Newton Raphson method.
7. Study on Economic load dispatch.
8. Study of different transformer protection schemes by simulation.
9. Study of different generator protection schemes by simulation.
10. Study of different motor protection schemes by simulation.
11. Study of different characteristics of over current relay.
12. Study of different protection scheme for feeder.

Institute may develop experiments based on the theory taught in addition to experiments mentioned.

POWER ELECTRONICS LABORATORY EE-693

Credit: 2 **Contact: 3P**

List of Experiments:

1. Study of the characteristics of an SCR.
2. Study of the characteristics of a Triac
3. Study of different triggering circuits of an SCR
4. Study of firing circuits suitable for triggering SCR in a single phase full controlled bridge.
5. Study of the operation of a single phase full controlled bridge converter with R and R-L load.
6. Study of performance of single phase half controlled symmetrical and asymmetrical bridge converters.
7. Study of performance of step down chopper with R and R-L load.
8. Study of performance of single phase controlled converter with and without source inductance (simulation)
9. Study of performance of step up and step down chopper with MOSFET, IGBT and GTO as switch (simulation).
10. Study of performance of single phase half controlled symmetrical and asymmetrical bridge converter.(simulation)
11. Study of performance of three phase controlled converter with R & R-L load. (simulation)
12. Study of performance of PWM bridge inverter using MOSFET as switch with R and R-L load.
13. Study of performance of three phase AC controller with R and R-L load (simulation)
14. Study of performance of a Dual converter. (simulation)
15. Study of performance of a Cycloconverter (simulation)

Institute may develop experiments based on the theory taught in addition to experiments mentioned.

. **Reference books:**

1. Fundamental of Power Electronics with MATLAB, Randall Shaffer, Cengage Learning.
2. SPICE for Power electronics and electric power, M.H. Rashid & H.M. Rashid, Taylor & Francis.
3. Power Electronics: Principles and application, Jacob, Cengage Learning
4. Power Electronics, Daniel W. Hart, Tata McGraw Hill Edition.
5. Modeling & Simulation using MATLAB-SIMILINK , S. Jain, Wiley India
6. MATLAB & SIMULINK for Engineers, A.K. Tyagi, Oxford University Press.

Syllabus for B.Tech(Electrical Engineering) Up to Fourth

SOFTWARE ENGINEERING LABORATORY

Syllabus for B.Tech(Electrical Engineering) Up to Fourth

EE-694 (a)

Credit: 2 **Contact: 3P**

Pre-requisite: For the software Engineering Lab, design a project proposal which will be used throughout the lab for performing different experiments using CASE tools.

1. Preparation of requirement document for proposed project in standard format.
2. Project schedule preparation using tools like MSP project, Generation of Gnatt and PERT chart from schedule. Prepare project management plan in standard format..
3. Draw Use case diagram, Class diagram, Sequence diagram and prepare Software design document using tools like Rational Rose.
4. Estimate project size using Function Point (FP)/Use Case Point. Use Excel/Open Office template for calculation.
5. Design Test Script/Test Plan (both Black box and White Box approach) for a small component of the proposed project. (Develop that component using programming languages like c/Java/VB etc.)
6. Generate test result and perform defect cause analysis using Pareto or Fishbone diagram.
7. Compute Process and Product Metrics (e.g. Defect Density, Defect Age, Productivity, Cost etc.)
8. Familiarization with any Version control system like CVS/VSS/PVCS etc.

Following projects can be used as dummy projects:

- Library management system
- Railway reservation system
- Employee payroll
- Online banking system
- Online Shopping Cart
- Online Examination

DATE BASE MANAGEMENT SYSTEM LABORATORY EE-694 (b)

Credit: 2 **Contact: 3P**

1. Creating Database:

- Creating a Database
- Creating a table
- Specifying Relational Data Types
- Specifying Constraints
- Creating Indexes.

2 .Table and record Handling

1. INSERT statement
2. Using SELECT and INSERT together
3. DELETE, UPDATE, TRUNCATE statements
4. DROP, ALTER statements

3. Retrieving Data from Database

- The SELECT statement
- Using the WHERE clause
- Using Logical Operators in the WHERE clause
- Using IN, BETWEEN, LIKE, ORDER,BY GROUP BY and HAVING

4. Clause

- Using AGGREGATE function
- Combining Tables using JOINS
- Sub queries

5. Database Management.

- Creating views

Syllabus for B.Tech(Electrical Engineering) Up to Fourth

- Creating Column Aliases
- Creating Database Users

- Using GRANT and REVOKE

OBJECT ORIENTED PROGRAMMING LABORATORY EE-694 (c)

Credit: 2 **Contact: 3P**

1. Assignments on class, constructor, overloading, inheritance, overriding.
2. Assignments on wrapper, class, arrays.
3. Assignments on developing interfaces-multiple inheritance, extending interfaces.
4. Assignments on creating and accessing packages.
5. Assignments on multithreaded programming.
6. Assignment on applet programming

Note: Use Java for programming

Preferably download"**java_ee_sdk-6u4-jdk7-windows.exe"** from

http://www.oracle.com/technetwork/java/javaee/downloads/java-ee-sdk-6u3-jdk-7u1-downloads-523391.html

EMBEDDED SYSTEMS LABORATORY EE-694 (d)

Credit: 2 **Contact: 3P**

1. Familiarization with a microcontroller kit (and its associated PC based development system). Entering and executing a program, interfacing a LED matrix and display a specific pattern (digit) on the matrix.
2. Key board-MCU interfacing: Interfacing a 4X4 switch matrix with Microcontroller. – detect keyboard operation through interrupt, take an input from the keyboard and display the data on an LED Matrix.
3. Generation of triangular wave analog signal by PWM, triggering through internal timer.
4. MCU-DAC interfacing and generation of triangular wave, triggering through timer (on chip timer).
5. MCU interfacing and displaying a string in an LCD Display.
6. Interfacing of an ADC and data transfer by software polling.
7. ADC triggering through timer (on chip timer), Interrupt driven data transfer from ADC
8. Stepper motor position control using a Microcontroller. Generating a periodic staircase triangular wave position pattern with a fixed time period. Recording the rotor position in a video.
9. Serial communication between Microcontroller and PC
10. Temperature control (PD and PID) using a microcontroller and PWM output.

Reference Books:

1. Stuart Ball, "Analog Interfacing to Embedded Microprocessors- Real World Design", Newnes & Butterworth–Heinemann, 2001.
2. Dogan Ibrahim,"Microcontroller Based Applied Digital Control",John Wiley & Sons Ltd, 2006
3. Rob Williams, "Real-Time Systems Development", Butterworth-Heinemann(Elsevier) 2006

Syllabus for B.Tech(Electrical Engineering) Up to Fourth

Proposed

VII Semester Theory
ELECTRIC DRIVES EE-701

Credit: 4 **Contact: 3L+1T**

Module	Content	Hour
1	**Electric Drive:** Concept, classification, parts and advantages of electrical dives. Types of Loads, Components of load toques, Fundamental torque equations, Equivalent value of drive parameters for loads with rotational and translational motion. Determination of moment of inertia, Steady state stability, Transient stability. Multiquadrant operation of drives. Load equalization.	05
2	**Motor power rating:** Thermal model of motor for heating and cooling, classes of motor duty, determination of motor rating for continuous, short time and intermittent duty, equivalent current, torque and power methods of determination of rating for fluctuating and intermittent loads. Effect of load inertia & environmental factors.	05
3	**Stating of Electric Drives**: Effect of starting on Power supply, motor and load. Methods of stating of electric motors. Acceleration time Energy relation during stating, methods to reduce the Energy loss during starting. **Braking of Electric Drives:** Types of braking, braking of DC motor, Induction motor and Synchronous motor, Energy loss during braking,	08
4	**DC motor drives:** Modeling of DC motors**,** State space modeling, block diagram & Transfer function, Single phase, three phases fully controlled and half controlled DC drives. Dual converter control of DC drives. Power factor, supply harmonics and ripple in motor current chopper controlled DC motor drives.	06
5	**Induction motor drives:** Stator voltage variation by three phase controllers, Speed control using chopper resistance in the rotor circuit, slip power recovery scheme. Pulse width modulated inverter fed and current source inverter fed induction motor drive. Volts/Hertz Control, Vector or Field oriented control.	06
6	**Synchronous motor drives:** Variable frequency control, Self Control, Voltage source inverter fed synchronous motor drive, Vector control.	05
7	Introduction to Solar and Battery Powered Drive, Stepper motor, Switched Reluctance motor drive **Industrial application:** Drive consideration for Textile mills, Steel rolling mills, Cement mills, Paper mills, Machine tools. Cranes & hoist drives.	05

Numerical problems to be solved in tutorial classes. Text Books:

1. Fundamental of Electrical Drives, G.K. Dubey, New Age International Publication.
2. Electric Drives, Vedam Subrahmanyam, TMH
3. A first course on Electrical Drives, S.K. Pillai, , New Age International Publication.

Reference Books:

1. Electric motor drives, R. Krishnan, PHI

2. Modern Power Electronics & Ac drives, B.K. Bose, Pearson Education.
3. Electric Motor & Drives. Austin Hughes, Newnes.

Syllabus for B.Tech(Electrical Engineering) Up to Fourth

UTILISATION OF ELECTRIC POWER EE-702

Credit: 4 **Contact: 3L+1T**

Module	Content	Hour
1	**Electric Traction :** Requirement of an ideal traction system, Supply system for electric traction, Train movement (speed time curve, simplified speed time curve, average speed and schedule speed), Mechanism of train movement (energy consumption, tractive effort during acceleration, tractive effort on a gradient, tractive effort for resistance, power & energy output for the driving axles, factors affecting specific energy consumption, coefficient of adhesion). Electric traction motor & their control: Parallel and series operation of Series and Shunt motor with equal and unequal wheel diameter, effect of sudden change of in supply voltage, Temporary interruption of supply, Tractive effort and horse power. Use of AC series motor and Induction motor for traction. Traction motor control: DC series motor control, Multiple unit control, Braking of electric motors, Electrolysis by current through earth, current collection in traction system, Power electronic controllers in traction system.	16
2	**Illumination:** The nature of radiation, Polar curve, Law of illumination, Photometry (Photovoltaic cell, distribution photometry, integrating sphere, brightness measurement), Types of Lamps: Conventional and energy efficient, Basic principle of light control, Different lighting scheme & their design methods, Flood and Street lighting.	08
3	**Electric Heating welding:** Types of heating, Resistance heating, Induction heating, Arc furnace, Dielectric heating, Microwave heating.	08
4	**Electrolytic processes**: Basic principles, Faraday's law of Electrolysis, Electro deposition, Extraction and refining of metals, Power supply of Electrolytic processes.	08

Numerical problems to be solved in the tutorial classes. Text Books:

1. Generation Distribution and Utilization of Electrical Energy, C.L. Wadhawa, New Age International Publishers.
2. Art and Science of Utilization of Electrical Energy, H. Partab, Dhanpat Rai & Sons.
3. Utilisation of Electric Energy, E.Openahaw Taylor, Orient Longman.

Power System III EE-703A

Credit: 4 **Contact: 3L+1T**

1. Objectives of Power System Operation **6**

Power Systems in Restructured Environment; Distributed and Dispersed Generation; Environment Aspects of Electric Power Generation.

2. Economic Operation of Energy Generation Systems **10**

Generation Cost Curves; Economic Operation of Thermal System; Plant Scheduling; Transmission Loss and Penalty Factor; Hydro-Thermal Scheduling; Concept of Reserves and Constraints; Unit Commitment.

3. Automatic Generation Control **8**

Concept of AVR and ALFC Loops, Significance of Double Loop in ALFC; Exciter and VAR Control; Single Area Load Frequency Control; Two Area Load Frequency Control; Frequency Response.

4. Compensation in Power System **8**

Reactive Power Sensitivity and Voltage Control; Load Compensation with Capacitor Banks; Line Compensation with Reactors; Shunt and Series Compensation; Fixed Series Capacitors; Thyristor Controlled Series Capacitors; Introduction to SVC and STATCOM.

5. Power System Transients **8**

Types of System Transients; Overvoltage in Transmission Lines; Propagation of Surges and Travelling Waves; Protection Against Lightning and Surges;

Text Books

1. Power System Engineering, Kothari & Nagrath, Mc Graw Hill
2. Power System Analysis, Granger and Stevension, Mc Graw Hill
3. Electric Power Genration operation and control, Wood and Woolenberg, Willey.

Reference Books:

1. Power system stability and Control, P. Kundur , Mc Graw Hill
2. Modern power system analysis, Kothari & Nagrath, Mc.Graw Hill
3. Power system Analysis, Nagsarkar & Sukhija, Pearson
4. Power system analysis, operation and control, Chakrabarti and Halder, PHI
5. Book of Elgand.

CONTROL SYSTEM-III EE-703B

Credit: 3 **Contact: 3L**

Module	Content	Hour
1	**Feedback Linearization**: Motivation, Input–Output Linearization, Full-State Linearization, State Feedback Control and Stabilization.	05
2	**Sliding Mode Control:** Overview of SMC, Motivating Examples, Stabilization of second order system; Advantages and disadvantages.	05
3	**Optimal control system:** Formulation of optimal control problem: Minimum time, minimum energy, minimum fuel problem, state regulator, output regulator & tracking problems. Calculus of variations: Constrained fixed point and variable point problems, Euler Lagrange equations. Problems with equality and inequality constraints. Engineering application, Lagrange, Mayer & Bolza problems, Pontryagin's maximum (minimum) principle. Multiple decision process in discrete and continuous time - The dynamic programming. Numerical solution of two point boundary value problems - the steepest descent method and the Fletcher - Powell Method.	20

Numerical problems to be solved in the class. Text Books:

1. Applied Nonlinear control, J.J.E. Slotine & W. Li, Prentice Hall
2. Modern Control theory, M. Gopal, 2nd Edition, New age international publishers.
3. Introduction to control system, D.K. Anand & R.B. Zmood, Asian book Pvt. Ltd.

Reference Books:

1. Adaptive control system, K.J. Astrom and B. Wittenamark, Addision Wesley

Publishing Co
2. Nonlinear control systems, Springer Verlag..

Syllabus for B.Tech(Electrical Engineering) Up to Fourth

Electric Machines III EE-703C

Credit: 3 **Contact: 3L**

(Syllabus Modified)

Module	Content	Hour
1	Generalized theory of electric machines: The Primitive machine, Voltage equations of the Primitive machine, Invariance of power, Transformation from a displaced brush axis, Transformation from three phases to two phases, Transformation from rotating axes to stationary axes, Physical concepts of Park's transformations, Transformed impedance matrix, Electrical torque, Restriction of the generalized theory of electrical machines.	10
2	Direct Current machine dynamics: Separately excited D.C. generators: steady state analysis, and transient analysis. Separately excited D.C. motor: steady state analysis, transient analysis, Transfer function & Block diagram.	4
3	Transients and dynamics of A.C Machines, Synchronous and Induction achiness: Electrical transients in Synchronous machine, Expression for reactances and time constants. Dynamics of synchronous machine, Electromechanical equation- motor operation- generator operation - small oscillations, general equation for small oscillations- representation of oscillations in state variable form. Dynamics of Induction machine, Induction machine dynamics during starting and braking, acceleration time, Induction machine dynamics during normal operation, Equation of dynamical response of Induction motor.	8
4	Space Vectors and its application to the analysis of electrical machines specially induction motors: Principle, DQ flux-linkages model, Space Phasor model derivation, Analytical solution of machine dynamics, Signal flow graph of the space modeled Induction motor, Control principle of Induction motor.	6
5	Motor behavior under asymmetrical voltage supply. Harmonic effects on Induction motor, harmonic equivalent circuit and harmonic torque.	08

Numerical problems to be solved in the class. Text Books:

1. Generalized theory of Electrical machines, P.S.Bimbhra, Khanna publishers.
2. Electrical Machinery, S.K. Sen, Khanna Publishers.
3. Electric motor drives, modeling, analysis and control, R. Krishnan, PHI

Reference Books:

1. Modern power electronics and AC drives, B.K. Bose, Pearson education.
2. Power system stability, Vol-III, E.W.Kimbar, John Wiley & Sons.
3. Electrical Machinery, A.E. Fitzgereld, C. Kingslay and S.D. Uman, Mc Graw Hills.
4. http://alexandria.tue.nl/extral/PRF14B/9702378.pdf
5. http://www.iasj.net/iasj.net/iasj?func=fulltext&ald=24742

HIGH VOLTAGE ENGINEERING EE-704A

Credit: 3 **Contact: 3L**

Module	Content	Hour

Syllabus for B.Tech(Electrical Engineering) Up to Fourth

1

Syllabus for B.Tech(Electrical Engineering) Up to Fourth

1	**Introduction:** Power and energy, sources of energy, review of thermodynamic cycles related to power plants, fuels and combustion calculations. Load estimation, load curves, various terms and factors involved in power plant calculations. Effect of variable load on power plant operation, Selection of power plant.	08

Syllabus for B.Tech(Electrical Engineering) Up to Fourth

	Power plant economics and selection: Effect of plant type on costs, rates, fixed elements, energy elements, customer elements and investor's profit; depreciation and replacement, theory of rates. Economics of plant selection, other considerations in plant selection.	
2	**Steam power plant:** General layout of steam power plant, Power plant boilers including critical and super critical boilers. Fluidized bed boilers, boilers mountings and accessories, Different systems such as coal handling system, pulverizers and coal burners, combustion system, draft, ash handling system, Dust collection system, Feed water treatment and condenser and cooling towers and cooling ponds, Turbine auxiliary systems such as governing, feed heating, reheating, flange heating and gland leakage. Operation and maintenance of steam power plant, heat balance and efficiency, Site selection of a steam power plant.	08
3	**Diesel power plant:** General layout, Components of Diesel power plant, Performance of diesel power plant, fuel system, lubrication system, air intake and admission system, supercharging system, exhaust system, diesel plant operation and efficiency, heat balance, Site selection of diesel power plant, Comparative study of diesel power plant with steam power plant. **Gas turbine power plant:** Layout of gas turbine power plant, Elements of gas turbine power plants, Gas turbine fuels, cogeneration, auxiliary systems such as fuel, controls and lubrication, operation and maintenance, Combined cycle power plants, Site selection of gas turbine power plant .	08
4	**Nuclear power plant:** Principles of nuclear energy, Lay out of nuclear power plant, Basic components of nuclear reactions, nuclear power station, Nuclear waste disposal, Site selection of nuclear power plants. Hydro electric station Hydrology, Principles of working, applications, site selection, classification and arrangements, hydro-electric plants, run off size of plant and choice of units, operation and maintenance, hydro systems, interconnected systems. Non Conventional Power Plants Introduction to non-conventional power plants (Solar, wind, geothermal, tidal)etc.	09
5	**Electrical system:** Generators and their cooling, transformers and their cooling. Instrumentation Purpose, classification, selection and application, recorders and their use, listing of various control rooms. Pollution due to power generation.	07

Numerical problems to be solved in the class. Text Books:

1. Power Plant Engineering, P.K. Nag, Tata McGraw Hill.
2. Power Plant Engineering, F.T. Morse, Affiliated East-West Press Pvt. Ltd, New Delhi/Madras
3. Power Plant Technology El-Vakil, McGraw Hill.

Reference Books:

1. Steam & Gas Turbines & Power Plant Engineering by R.Yadav, Central Pub.House.

Syllabus for B.Tech(Electrical Engineering) Up to Fourth

GENERATION ECONOMICS
EE-704C

Credit: 3 **Contact: 3L**

Syllabus for B.Tech(Electrical Engineering) Up to Fourth

Module	Content	Hour
1	**Economics of Generation :** Cost of power generation- Thermal, Hydro and Nuclear. Types of Consumers in a distribution system-Domestic, Commercial, Industrial etc. Concept of load factor, plant capacity factor, plant use factor, diversity factor, demand factor. Choice of size and number of generation units.	07
2	**Tariff-**: Block rate, flat rate, two part, maximum demand, Power factor and three part tariffs. Subsidization and Cross subsidization. Availability tariff of generation companies. Pool tariff of transmission companies. Availability based tariff (ABT).	08
3	**Unit Commitment:** Constraints in Unit Commitment, Spinning reserve, Thermal unit constraints, Hydro constraints, Must run, Fuel constraints. Unit commitment solution methods,	07
4	**Economic Dispatch**: Transmission loss formulae and its application in economic load scheduling. Computational methods in economic load scheduling. Active and reactive power optimization.	10
5	**State Estimation and load forecasting in power system:** Introduction, state estimation methods, concept of load forecasting, load forecasting technique and application in power system.	08

Numerical problems to be solved in the class.

Text Books:

1. Economic operation of Power System, L.K. Kirchmayar John Wiely, Newyork.
2. Power system Analysis, operation & control, Chakrabarty & Haldar, 2nd edition, PHI.
3. Modern power system analysis, D.P. Kothari & I.J. Nagtrath, Tata McGraw Hill.

References:

1. Power generation operation & control, A.J. Wood & B.F. Wollenberg, Wiley India.
2. Operation and control in power system, P.S.R. Murthy, BSP Publication.

RENEWABLE & NON CONVENTIONAL ENERGY EE-704 D

Credit: 3 **Contact: 3L**

Module	Content	Ho
1	**Introduction to Energy sources:** Renewable and non-renewable energy sources, energy consumption as a measure of Nation's development; strategy for meeting the future energy requirements Global and National scenarios, Prospects of renewable energy sources. Impact of renewable energy generation on environment, Kyoto Protocol.	03

Numerical problems to be solved in the class. Text Books:

4. Non conventional Energy sources, G.D. Rai, Khanna Publishers.
5. Renewable energy sources and conversion technology, Bansal Keemann, Meliss, Tata Mc Graw Hill.
6. Non conventional Energy, Ashok V. Desai, New Age International Publishers Ltd.

Reference Books:

1. Renewable energy resources and emerging technologies, D.P. Kothari, Prentice Hall of India Pvt. Ltd.

COMPUTER NETWORKS EE-705A

Credit: 3 **Contact: 3L**

Module	Content	Hour

Syllabus for B.Tech(Electrical Engineering) Up to Fourth

1	**Overview of Data Communication and Networking:** Introduction, Data communications: components, data representation (ASCII, ISO etc.), direction of data flow (simplex, half duplex, full duplex); network criteria, physical structure (type of connection, topology), categories of network (LAN, MAN,WAN); Internet: brief history, Protocols and standards; Reference models: OSI reference model, TCP/IP reference model, their comparative study. **Physical Level:**	10

Syllabus for B.Tech(Electrical Engineering) Up to Fourth

	Overview of data (analog & digital), signal (analog & digital), transmission (analog & digital) & transmission media (guided & unguided); Circuit Switching: time division & space division switch, TDM bus; Telephone Network.	
2	**Data link Layer:** Types of errors, framing (character and bit stuffing), error detection & correction methods; Flow control; Protocols: Stop & wait ARQ, Go-Back-N ARQ, Selective repeat ARQ, HDLC;] **Medium Access sub layer:** Point to Point Protocol, LCP, NCP, Token Ring; Reservation, Polling, Multiple access protocols: Pure ALOHA, Slotted ALOHA, CSMA, CSMA/CD, CSMA/CA Traditional Ethernet, fast Ethernet (in brief).	10
3	**Network layer:** Internetworking & devices: Repeaters, Hubs, Bridges, Switches, Router, Gateway; Addressing : IP addressing, sub netting; Routing : techniques, static vs. dynamic routing , Unicast Routing Protocols: RIP, OSPF, BGP; Other Procols: ARP, IP, ICMP, IPV6. **Transport layer:** Process to Process delivery; UDP; TCP; Congestion Control: Open Loop, Closed Loop choke packets; Quality of service: techniques to improve QoS: Leaky bucket algorithm, Token bucket algorithm,	12
4	**Application Layer:** Introduction to DNS, SMTP, SNMP, FTP, HTTP & WWW; Security: Cryptography (Public, Private Key based), Digital Signature, Firewalls. **Modern topics:** ISDN services & ATM, DSL technology, Cable Modem: Architecture and operation in brief. Wireless LAN: IEEE 802.11, Introduction to blue-tooth.	08

Numerical problems to be solved in the class.

Text Books:

1. Data Communications and Networking (3rd Ed.), A. Forouzan , TMH
2. Computer Networks (4th Ed.), A. S. Tanenbaum, Pearson Education/PHI
3. Data and Computer Communications (5th Ed.), W. Stallings, PHI/ Pearson Education

Reference Books:

1. Computer Networking -A top down approach featuring the internet, Kurose and Rose Pearson Education
2. Communication Networks, Leon, Garica, Widjaja, TMH
3. Communication Networks, Walrand, TMH.
4. Internetworking with TCP/IP, vol. 1, 2, 3(4th Ed.), Comer, Pearson Education/PHI

ARTIFICIAL INTELLIGENCE EE-705B

Credit: 3 **Contact: 3L**

Module	Content	Hour

Syllabus for B.Tech(Electrical Engineering) Up to Fourth

1	**Introduction:** Intelligent Agents – Agents and environments - Good behavior – The nature of environments – structure of agents - Problem Solving - problem solving agents – example problems – searching for solutions – uniformed search strategies - avoiding repeated states – searching with partial information.	06

2	**Searching techniques:** Informed search and exploration – Informed search strategies – heuristic function – local search algorithms and optimistic problems – local search in continuous spaces – online search agents and unknown environments - Constraint satisfaction problems (CSP) – Backtracking search and Local search for CSP – Structure of problems - Adversarial Search – Games – Optimal decisions in games – Alpha – Beta Pruning – imperfect real-time decision – games that include an element of chance.	09
3	**Knowledge representation:** First order logic – representation revisited – Syntax and semantics for first order logic – Using first order logic – Knowledge engineering in first order logic - Inference in First order logic – prepositional versus first order logic – unification and lifting – forward chaining – backward chaining - Resolution - Knowledge representation - Ontological Engineering - Categories and objects – Actions - Simulation and events - Mental events and mental objects.	09
4	**Learning:** Learning from observations - forms of learning - Inductive learning - Learning decision trees - Ensemble learning - Knowledge in learning – Logical formulation of learning – Explanation based learning – Learning using relevant information – Inductive logic programming - Statistical learning methods - Learning with complete data - Learning with hidden variable - EM algorithm - Instance based learning - Neural networks - Reinforcement learning – Passive reinforcement learning - Active reinforcement learning - Generalization in reinforcement learning.	09
5	**Applications:** Communication – Communication as action – Formal grammar for a fragment of English – Syntactic analysis – Augmented grammars – Semantic interpretation – Ambiguity and disambiguation – Discourse understanding – Grammar induction - Probabilistic language processing - Probabilistic language models – Information retrieval – Information Extraction – Machine translation.	07

Text Books:

1. Artificial Intelligence – A Modern Approach", Stuart Russell, Peter Norvig, 2nd Edition, Pearson Education / Prentice Hall of India, 2004.

Reference Books:

1. Artificial Intelligence: A new Synthesis, Nilsson. J. Nils , Harcourt Asia Pvt. Ltd., 2000.
2. Artificial Intelligence, Rich Elaine & Knight Kevin, 2nd Edition, Tata McGraw-Hill, 2003.
3. Artificial Intelligence-Structures and Strategies for Complex Problem Solving, Geogre ***F*. Luger, Pearson Education / PHI, 2002.**

DIGITAL COMMUNICATION EE-705C

Credit: 3 **Contact: 3L**

Module	Content	Hour

Syllabus for B.Tech(Electrical Engineering) Up to Fourth

1	**Probability Theory and Random Processes**: Conditional probability, communication example, joint probability, statistical independence, random variable-continuous and discrete, cumulative distribution function, probability density function – Gaussian, Rayleigh and Rician, mean, variance, random process, stationary and ergodic processes, correlation coefficient, covariance, auto correlation function and its properties, random binary wave, power spectral density.	06

2	**Signal Vector Representation:** Analogy between signal and vector, distinguishibility of signal, orthogonality and orthonormality, basis function, orthogonal signal space, message point, signal constellation, geometric interpretation of signals, likelihood functions, Schwartz inequality, Gram-Schmidt orthogonalization procedure, response of the noisy signal at the receiver, maximum likelihood decision rule, decision boundary, optimum correlation receiver; probability of error , error function, complementary error function, Type-I and Type-II errors	10
3	**Digital Data Transmission:** Concept of sampling, Pulse Amplitude Modulation (PAM), interlacing and multiplexing of samples, Pulse Code Modulation (PCM), quantization, uniform and non-uniform quantization, quantization noise, binary encoding, A-Law and b -law companding, differential PCM, delta modulation and adaptive delta modulation. Digital transmission components, source, multiplexer, line coder, regenerative repeater, concept of line coding –polar/unipolar/bipolar NRZ and RZ, Manchester, differential encoding and their PSDs, pulse shaping, Inter Symbol Interference. (ISI), Eye pattern, Nyquist criterion for zero ISI, equalizer, zero forcing equalizer, timing extraction.	10
4	**Digital Modulation Techniques:** Types of Digital Modulation, coherent and non-coherent Binary Modulation Techniques, basic digital carrier modulation techniques: ASK, FSK and PSK, Coherent Binary Phase Shift Keying (BPSK), geometrical representation of BPSK signal; error probability of BPSK, generation and detection of BPSK Signal, power spectrum of BPSK. Concept of M-ary Communication, M-ary phase shift keying, the average probability of symbol error for coherent M-ary PSK, power spectra of MPSK, Quadrature Phase Shift Keying (QPSK), error probability of QPSK signal, generation and detection of QPSK signals, power spectra of QPSK signals, Offset Quadrature Phase shift Queuing (OQPSK), Coherent Frequency Shift Keying (FSK), Binary FSK, error probability of BFSK signals, generation and detection of Coherent Binary FSK signals, power spectra of BFSK signal, Minimum Shift Keying (MSK), signal constellation of MSK waveforms, error probability of MSK signal, Gaussian Minimum Shift Keying: GMSK, basic concept of OFDM, constellation diagram, Some performance issues for different digital modulation techniques - Error Vector Magnitude (EVM), Eye Pattern and Relative Constellation Error (RCE), Conceptual idea for Vector Signal Analyzer (VSA).	14

Numerical problems to be solved in the class. Text Books:

1. Digital Communications, S. Haykin, Wiley India.
2. Principles of Communication Systems, H. Taub and D.L.Schilling, TMH Publishing Co.
3. Wireless Communication and Networks: 3G and Beyond, I. Saha Misra, TMH Education.
4. Digital Communications, J.G.Proakis, TMH Publishing Co.

REFERENCE BOOKS:

1. Digital Communications Fundamentals and Applications, B. Sklar and P.K.Ray, Pearson Education.
2. Modern Digital and Analog Communication Systems, B.P.Lathi and Z.Ding, Oxford University Press.
3. Digital Communication, A. Bhattacharya, TMH Publishing Co.

DIGITAL IMAGE PROCESSING EE-705D

Credit: 3 **Contact: 3L**

Module	Content	Hour

Syllabus for B.Tech(Electrical Engineering) Up to Fourth

1	**Digital Image Processing Systems**: Introduction to structure of human eye, Image formation in the human eye, Brightness adaptation and discrimination, Image sensing and acquisition, storage, Processing, Communication, Display Image Sampling and quantization, Basic relationships between pixels.	05

2	**Image Transforms (implementation):** Introduction to Fourier transform, DFT and 2-D DFT, Properties of 2-D FT, FFT, IFFT, Walsh transform, Hadamard transform, Discrete cosine transform, Slant transform, Optimum transform: Karhunen – Loeve Hotelling) transform.	07
3	**Image Enhancement in the Spatial and Frequency Domain:** Gray level transformations, Histogram processing, Arithmetic and logic operations, Spatial filtering: Introduction, Smoothing and sharpening filters. Frequency domain filters: Homomorphic filtering.	07
4	**Image Data Compression:** Fundamentals, Redundancies: Coding, Inter pixel Psycho-visual, fidelity criteria, Image compression models, Error free compression, Lossy compression, Image compression standards: Binary image and Continuous tone Still Image compression standards, Video compression standards.	07
5	**Morphological Image Processing:** Introductions, Dilation, Erosion, Opening, closing, Hit -or-miss transformation, Morphological algorithm operations on binary Images, Morphological algorithm operations on gray-scale Images.	07
7	**Image Segmentation, Representation and Description:** Detection of discontinuities, Edge linking and Boundary detection, Thresholding region based segmentation, Image Representation schemes, Boundary descriptors, and Regional descriptors.	07

Numerical problems to be solved in the class. Text Books:

1. Digital Image Processing, R.C Gonzalez and R. Woods, Pearson publication.
2. Digital Image Processing, Anil K. Jain, Prentice-Hall, India.

Reference Books:

1. Digital Image Processing, W.K. Pratt 2nd Edition, John Wiley & Sons.
2. Digital Image Processing and Analysis, B. Chanda & D. Dutta Majumder Prentice-Hall, India.
3. Image Processing- Theory, Algorithms & Architecture, M. A. Sid-Ahmed, McGraw-Hill.

Practical ELECTRICAL SYSTEMS Design-I

EE-782

Credit: 2 **Contact: 3L**

The students would INDIVIDUALLY design the equipment and systems as per specifications provided by the class teacher following established procedures.
For each student, one item from each of the three groups would be chosen.

- *For unspecified items of specification and or specifications of wires, cables etc., data should be taken by students from handbooks and Indian standard.*
- *Students should spend the allotted periods for carrying out design computations. Their attendance shall be recorded.*
- *Students should maintain a dedicated bound notebook for recording design activities like calculations, formulae used, sketches, flowcharts etc. The notebook should be regularly submitted to the class teacher for review and signature.*
- *Evaluation would be based on (i) Class attendance (20%), (ii) Design Note Book (30%) (iii) Design Report (30%) (iv) End of semester viva (20%, preferably by an external examiner)*

Syllabus for B.Tech(Electrical Engineering) Up to Fourth

Group-A	● Designing a heating element with specified wattage, voltage and ambient temperature. ● Designing an aircore grounding reactor with specified operating voltage, nominal current and fault current.
Group-B	● Designing the power distribution system for a small township.

Syllabus for B.Tech(Electrical Engineering) Up to Fourth

	• Designing a double circuit transmission line for a given voltage level and power (MVA) transfer. • Wiring and installation design of a multistoried residential building (G+4,not less than 16 dwelling flats with a lift and common pump) • Designing of a substation
Group-C	• Designing an ONAN distribution transformer. • Designing a three phase squirrel cage induction motor. • Designing a three phase wound rotor induction motor. • Designing a split phase squirrel cage induction motor for a ceiling fan or a domestic pump. • Designing a permanent magnet fractional hp servo motor .

Electric Drive Code: EE-791 **Contacts: 3P**

Credits: 2

1. Study of thysistor controlled DC Drive.
2. Study of Chopper fed DC Drive
3. Study of AC Single phase motor-speed control using TRIAC.

4. PWM Inverter fed 3 phase Induction Motor control using PSPICE / MATLAB / PSIM Software.
5. VSI / CSI fed Induction motor Drive analysis using MATLAB/DSPICE/PSIM Software.
6. Study of V/f control operation of 3Φ induction motor drive.
7. Study of permanent magnet synchronous motor drive fed by PWM Inverter using Software.
8. Regenerative / Dynamic braking operation for DC Motor - Study using software.
9. Regenerative / Dynamic braking operation of AC motor - study using software.

PC/PLC based AC/DC motor control operation.

Computer network laboratory

EE-792 (A)

Credit: 2 Contact: 3P

1. IPC (Message queue)
2. NIC Installation & Configuration (Windows/Linux)
3. Familiarization with
   - Networking cables (CAT5, UTP)
   - Connectors (RJ45, T-connector)
   - Hubs, Switches
4. TCP/UDP Socket Programming
5. Multicast & Broadcast Sockets
6. Implementation of a Prototype Multithreaded Server
7. Implementation of
   - Data Link Layer Flow Control Mechanism (Stop & Wait, Sliding Window)

- Data Link Layer Error Detection Mechanism (Cyclic Redundancy Check)
- Data Link Layer Error Control Mechanism (Selective Repeat, Go Back N)

ARTIFICIAL INTELIGENCE LABORATORY

Credit: 2 EE 792(B) Contact: 3P

Syllabus for B.Tech(Electrical Engineering) Up to Fourth

At least eight problems are to be given to students. Those are problems are to be solved with programming Languages such as PROLOG & LISP

Syllabus for B.Tech(Electrical Engineering) Up to Fourth

DIGITAL COMMUNICATION LABORATORY EE-792 (C)

Credit: 2 Contact: 3P

1. Design, implementation and study of all the properties of 7-length and 15-length pn sequences using shift register.
2. Study of PAM and demodulation.
3. Study of PCM and demodulation.
4. Study of line coders: polar/unipolar/bipolar NRZ, RZ and Manchester.
5. Study of delta modulator and demodulator.
6. Study of adaptive delta modulator and demodulator.
7. Study of BPSK modulator and demodulator.
8. Study of BFSK modulator and demodulator.
9. Study of ASK modulator and demodulator.
10. Study of QPSK modulator and demodulator.
11. Simulation study of probability of symbol error for BPSK modulation.
12. Simulation study of probability of symbol error for BFSK modulation.

DIGITAL IMAGE PROCESSING LABORATORY EE-792(D)

Credit: 2

Contact: 3P

1. Display of Grayscale Images.
2. Histogram Equalization.
3. Non-linear Filtering.
4. Edge detection using Operators.
5. 2-D DFT and DCT.
6. Filtering in frequency domain.
7. Display of color images.
8. Conversion between color spaces.
9. DWT of images.
10. Segmentation using watershed transform.

Other Practicals as in Old Syllabus

Organisational Behaviour HU801A
Contracts: 2L Credits- 2

V I I I Semes

Syllabus for B.Tech(Electrical Engineering) Up to Fourth

1. Organizational Behaviour: Definition, Importance, Historical Background, Fundamental Concepts of OB, Challenges and Opportunities for OB. **[2]**

2. Personality and Attitudes: Meaning of personality, Personality Determinants and Traits, Development of Personality, Types of Attitudes, Job Satisfaction. **[2]**
3. Perception: Definition, Nature and Importance, Factors influencing Perception, Perceptual Selectivity, Link between Perception and Decision Making. **[2]**
4. Motivation: Definition, Theories of Motivation - Maslow's Hierarchy of Needs Theory, McGregor's Theory X & Y, Herzberg's Motivation-Hygiene Theory, Alderfer's ERG Theory, McClelland's Theory of Needs, Vroom's Expectancy Theory. **[4]**
5. Group Behaviour: Characteristics of Group, Types of Groups, Stages of Group Development, Group Decision Making. **[2]**
6. Communication: Communication Process, Direction of Communication, Barriers to Effective Communication. **[2]**
7. Leadership: Definition, Importance, Theories of Leadership Styles. **[2]**
8. Organizational Politics: Definition, Factors contributing to Political Behaviour. **[2]**
9. Conflict Management: Traditional vis-a-vis Modern View of Conflict, Functional and Dysfunctional Conflict, Conflict Process, Negotiation – Bargaining Strategies, Negotiation Process. **[2]**
10. Organizational Design: Various Organizational Structures and their Effects on Human Behaviour, Concepts of Organizational Climate and Organizational Culture. **[4]**

References:

1. Robbins, S. P. & Judge, T.A.: Organizational Behavior, Pearson Education, 15th Edn.
2. Luthans, Fred: Organizational Behavior, McGraw Hill, 12th Edn.
3. Shukla, Madhukar: Understanding Organizations – Organizational Theory & Practice in India, PHI
4. Fincham, R. & Rhodes, P.: Principles of Organizational Behaviour, OUP, 4th Edn.
5. Hersey, P., Blanchard, K.H., Johnson, D.E.- Management of Organizational Behavior Leading Human Resources, PHI, 10th Edn.

HVDC TRANSMISSION EE-801A

Credit: 3 **Contact: 3L**

Module	Content	Hour
1	**Introduction:** Introduction of DC power transmission technology, comparison of AC and DC transmission, limitation of HVDC transmission, reliability of HVDC systems, application of DC transmission, description of DC transmission system, planning for HVDC transmission, modern trends in DC transmission.	04
2	**Analysis of HDVC converters:** Choice of converter configuration, simplified analysis of Graetz circuit, converter bridge characteristics, Characteristics of a twelve pulse converter, detailed analysis of converters..	06
3	**Control of HVDC converter and systems:** Necessity of control of a DC link, rectifier control, compounding of rectifiers, power reversal of DC link, voltage dependent current order limit(VDCOL) characteristics of the converter, inverter extinction angle control, pulse phase control, starting and stopping of DC link, constant power control, control scheme of HVDC converters.	08

4	**Harmonics and filters:** Generation of harmonics by converters, characteristics of harmonics on DC side, characteristics of current harmonics, characteristic variation of harmonic currents with variation of firing angle and overlap angle, effect of control mode on harmonics, noncharacteristic harmonic. Harmonic model and equivalent circuit, use of filter, filter configuration, design of band-	10

	pass and high pass filter, protection of filters, DC filters, power line communication and RI noise, filters with voltage source converter HDVC schemes.	
5	**Fault and protection schemes in HVDC systems:** Nature and types of faults, faults on AC side of the converter stations, converter faults, fault on DC side of the systems, protection against over currents and over voltages, protection of filter units.	04
6	**Multiterminal HVDC systems:** Types of multiterminal (MTDC) systems, parallel operation aspect of MTDC. Control of power in MTDC. Multilevel DC systems. Power upgrading and conversion of AC lines into DC lines, Parallel AC/DC systems, FACTS and FACTS converters.	08

Text Books:

1. HVDC Transmission, S. Kamakshaiah & V. Kamaraju, Tata McGraw hill education.
2. HVDC Power transmission system, K.R.Padiyar, Wiley Eastern Limited.

Reference Books:

1. The Performance, Operation and Control of EHV Power Transmission Systems, A. Chakraborty, D.P. Kothary, A.K. Mukhopadhyay, Wheeler Pub.

2. High Voltage Direct Current Transmission, J. Arrillaga, Peter Pregrinu.
Extra High Voltage AC Transmission Engineering, Rakosh Das Begamudre, New Age International (P) Ltd.

3. High Voltage Direct Current Power Transmission, Colin Adamson and N.G.Hingorani, Garraway Limited, London

ILLUMINATION ENGINEERING EE-801B

Credit: 3 **Contact: 3L**

Module	Content	Hour
1	**Light, sight & color:** Sources of light: Day light, artificial light sources, energy radiation, visible spectrum of radiation, black body radiation and full radiator. Incandescence, dependence of light o/p on temperature. Theory of gas discharge and production of light. Perception of light and color, optical system of human eye, eye as visual processor. Reflection, refraction and other behavior of light.	06
2	**Measurement of light:** Measurement of light - radiometric and photometric quantities, units of measurement, standardization. Measurement of light distribution, direct and diffused reflection, fundamental concepts of colourimentry and measurement of colour.	06
3	**Lamp, accessories & luminaries:** Light production by gas discharge, fluorescence, incandescence, daylight principle of operation, light efficacy, color, electrical characteristics, typical applications, dimming condition of GLS filament, tungsten halogen lamps, fluorescent tubes, compact fluorescent lamp (CFL), low and high pressure sodium lamps, high pressure mercury lamp, metal halide lamp. Functions of luminaries, classification, Materials Used in luminaries manufacturing, reflection, refraction, diffusion, polarization and optical design, photometric measurements, application data and its use.LED.	12
4	**Interior lighting:** Objectives quantity and quality of light, selection of lamps, luminaries section, placement. Design considerations for lighting of offices, conference rooms, hospitals, teaching places, house etc., design calculations.	08

5	**Lighting control:** Types of lighting controls, strategy for selection, benefits of lighting control. Electric distribution system for lighting, maintenance strategies, group replacement schedule. Techniques of achieving energy efficient lighting design, role of computers in lighting	08

	design, advantages and limitations of computer aided lighting design.	

Text Books:

1. Utilization of Electric Power, C.L. Wadha, New Age International Ltd.
2. Generation, Distribution and Utilization of electrical energy, C.L. Wadha, New Age International Ltd.
3. Art and Science of Utilization of Electrical Energy, H. Partab, Dhanpat Rai & Sons.
4. Standard Hand Book for Electrical Engineers, Fink & Beaty, McGraw Hill International.

ENERGY MANAGEMENT & AUDIT EE-801C

Credit: 3 **Contact: 3L**

Module	Content	Hour
1	Energy Management & Audit: Definition, Energy audit- need, Types of energy audit, Energy management (audit) approach-understanding energy costs, Bench marking, Energy performance, Matching energy use to requirement, Maximizing system efficiencies, Optimizing the input energy requirements, Fuel and energy substitution, Energy audit instruments and intervals of EA regulation.	06
2	Energy Scenario: Commercial and Non-Commercial Energy, Primary Energy Resources, Commercial Energy Production, Final Energy Consumption, Energy Needs of Growing Economy, Long Term Energy Scenario, Energy Pricing, Energy Sector Reforms, Concept of smart grid, Tariff.	08
3	Energy Conservation Act-2001 and related policies: Energy Conservation Act-2001 and its features, Notification Under the act, Designated agencies, Schemes of Bureau of Energy Efficiency(BEE)-ECBC, S & L, DSM, BLY, SME's, Designated Consumers, Electricity Act 2003, Integrated Energy Policy,	06
4	Energy Efficiency and Climate changes: Energy and environment, Air pollution, Climate change, United Nations Framework Convention on climate change (UNFCCC), Kyoto Protocol, Clean Development Mechanism (CDM), CDM methodology and Procedures, Sustainable development	06
5	Non-Conventional Energy Sources: Concept of renewable Energy and importance, Different types of renewable Energy, Solar energy, Wind energy, Biomass energy, Hydro-energy, Fuel cells, Energy from wastes, Wave, Tidal and geothermal. Concept of energy storing device.	06
6	Energy Efficient Technologies in Electrical Systems: Maximum demand controllers, Automatic power factor controllers, Energy efficient motors, Soft starters with energy saver, Variable speed drives, Energy efficient transformers, Electronic ballast, Occupancy sensors, Energy efficient lighting controls, Energy saving potential of each technology	06

Text Books:

1. Energy Management Supply and Conservation, Dr. Clive Beggs, Butterworth Heinemann, 2002 .
2. Handbook of Energy Engineering, Albert Thumann & Paul Mehta, The Fairmont Press, INC.
3. Plant Engineers & Manager Guide to Energy Conservation, Albert.
4. Energy Management Handbook, Wayne C, John Willey and Sons

Reference Books:

1. NPC energy audit manual and reports

2. Guide to Energy Management, Cape Hart, Turner and Kennedy
3. Cleaner Production – Energy Efficiency Manual for GERIAP, UNEP, Bangkok prepared by
National Productivity Council
4. www.bee.org

Syllabus for B.Tech(Electrical Engineering) Up to Fourth

Syllabus for B.Tech(Electrical Engineering) Up to Fourth

DIGITAL SPEECH SIGNAL PROCESSING EE-801D

Credit: 3 **Contact: 3L**

Module	Content	Hour
1	Introduction: Production and transmission of acoustic signals: articulation of human speech. Acoustic-phonetic structure of Speech ,Speaker verification and Identification, Speaker Recognition, Speech Recognition , music synthesis and speech synthesis.	04
2	Discrete time speech signal Processing ,Anatomy and Physiology of Speech production, Categorization of Speech sound: Phonemes, Vowels, nasals, fricatives, plosives and transitional sounds, Pitch and Formants Z-transform, LTI Systems in the Frequency domain ,FFT, Time-Varying Systems and Short-time Fourier Transform(STFT),Stochastic process, Review of Digital Filters , models of speech production systems	08
3	Acoustics of Speech Production. Wave Equation, Lossless case, Effects of energy loss and boundary, Tube concatenation , lattice filter	06
4	Analysis and synthesis of Pole-Zero speech Model, Autocorrelation method, Linear Predictive model, lattice filter formulation, error minimization	06
5	The stochastic parameters of human speech, Gaussian densities and statistical model training, voiced and unvoiced speech modeling, resonance. Psycho-acoustics, Physiological exploration of periodicity, audio-spectrograms and sonograms, pitch-perception models.	08
6	Physiology of the ear and hearing mechanism, the Auditory System modeled as a Filter- bank, Gamma-tone , Spectrum and Complex Cepstrum analysis of speech as perceived by detectors, Automatic Speech Recognition (ASR), Linear Prediction analysis, GMM models, Log-ratio, Speech coding, Speaker recognition and Speaker verification	08

Text Books:

5. Discrete-time Speech Signal Processing, Thomas F. Quatieri, 2000, PHI.
6. Speech Communications: Human and Machine, D. O'Shaughnessy, 2nd edition, Universities Press, 2001
7. Digital Processing of Speech Signals, L. R. Rabiner and R. W. Schafer, Prentice-Hall, Englewood Cliffs, NJ, 1978.
8. Speech & Audio Signal Processing - Processing and Perception of Speech & Music, B.Gold & N.Morgan, Wiley Student edition

Reference Books:

1. Fundamentals of Speech Recognition, L. R. Rabiner and B.H. Juang. Englewood Cliffs, NJ, Prentice Hall 1993.
2. Speech Analysis. R. W. Schafer and J. D. Markel (eds.), IEEE Press, New York, 1979.
3. Acoustic Theory of Speech Production, G. Fant Mouton, The Hague, 1970.
4. Speech Analysis, Synthesis and Perception. J. L. Flanagan 2nd ed., Springer-Verlag, New York/Berlin, 1972.

POWER PLANT INSTRUMENTATION & CONTROL EE-

802A

Credit: 3 **Contact: 3L**

Module	Content	Hour

Syllabus for B.Tech(Electrical Engineering) Up to Fourth

1	Concepts of Power plants of different types: Setups, energy conversions and measurement requirements, examples of Thermal, Hydal, and Nuclear plants. Thermal power plant and system instrumentation.	08
2	Instrumentation for : (i) Turbines (ii) Condensers (iii) Generators (iv) Coal handling (v) Water treatment (vi) Feed water, combustion air and flue gases	12
3	Control: Boiler Control - Steam pressure control, combustion control, Furnace Draft control, Steam temperature control, Feed water control, Data logger and computer control, supervisory control and monitoring system. Instrumentation for safety interlocks - protective gears, emergency measures, Alarm systems and Analysis etc. Pollution measurement, monitoring and control.	12
4	Data handling-processing, logging, acquisition, accounting, display and storage. Instrumentation for Generator and Busbar coupling. Introduction to power plant modeling/simulation	08

Text Books:

1. Principles of Industrial Instrumentation, D. Patranabis, TMH New Delhi

Reference Books:

1. Electric Power Engineering Handbook – Edited by L. L. Grigsby.
2. Instrument Engineers Handbook, B. G. Liptak, Chilton Book Co., Philadelphia

SENSORS & TRANSDUCERS EE-802B

Credit: 3 **Contact: 3L**

Module	Content	Hour
1	**Mechanical and Electromechanical sensor:** Definition, principle of sensing & transduction, classification. Resistive (potentiometric type): Forms, material, resolution, accuracy, sensitivity. □Strain gauge: Theory, type, materials, design consideration, sensitivity, gauge factor, variation with temperature, adhesive, rosettes. □Inductive sensor: common types- Reluctance change type, Mutual inductance change type, transformer action type, Magnetostrictive type, brief discussion with respect to material, construction and input output variable, Ferromagnetic plunger type, short analysis. □LVDT: Construction, material, output input relationship, I/O curve, discussion. □Proximity sensor	12
2	**Capacitive sensors:** Variable distance-parallel plate type, variable area- parallel plate, serrated plate/teeth type and cylindrical type, variable dielectric constant type, calculation of sensitivity. Stretched diaphragm type: microphone, response characteristics. Piezoelectric element: piezoelectric effect, charge and voltage co-efficient, crystal model, materials, natural & synthetic type, their comparison, force & stress sensing, ultrasonic sensors.	08

3	**Thermal sensors:** Material expansion type: solid, liquid, gas & vapor Resistance change type: RTD materials, tip sensitive & stem sensitive type, Thermister material, shape, ranges and accuracy specification.]Thermo emf sensor: types, thermoelectric power, general consideration, Junction semiconductor type IC and PTAT type. Radiation sensors: types, characteristics and comparison. Pyroelectric type.	11
4	**Magnetic sensors:** Sensor based on Villari effect for assessment of force, torque, proximity, Wiedemann effect for yoke coil sensors, Thomson effect, Hall effect, and Hall drive, performance characteristics. Radiation sensors: LDR, Photovoltaic cells, photodiodes, photo emissive cell types, materials, construction, response. Geiger counters, Scintillation detectors, Introduction to smart sensors	09

Numerical problems to be solved in the class.

Text Books:

1. Sensor & transducers, D. Patranabis, 2nd edition, PHI
2. Instrument transducers, H.K.P. Neubert, Oxford University press.
3. Measurement systems: application & design, E.A.Doebelin, Mc Graw Hill.

BIO-MEDICAL INSTRUMENTATION EE-802C

Credit: 3 **Contact: 3L**

Module	Content	Hour
1	**Fundamentals:** Introduction to Physiological Systems –Organism, Cardiovascular, Respiratory, Renal, Hepatic, Gastrointestinal, Endocrinal, Nervous, Muscular, Cellular. Biological Signals – Bioelectric events, Biomechanical Systems, Cellular & Membrane phenomenon. The Action Potential and Propagation through Nervous System. The Peripheral Nervous Systems and sensory mechanisms. Biomaterials. Fundamentals of Electrophysiology –EKG, EEG, EMG, Evoked potentials. Quantification of Biological Signals.	08
2	**Measurement & Analysis:** Biological Sensors- Bio-electrodes, Biosensors and Transducers for Cardiology, Neurology, Pulmonary, Oxygen saturation & gaseous exchange, flow measurement, goniometry, Endoscopy, Impedance Plethysmography. Biological Amplifiers –Instrumentation Amplifiers for Electrophysiology (ECG, EMG, EEG, EOG), Filters, Power Supplies. Recording and Display systems, Digital Conversion for storage, Electrical Hazards in measurements, Isolation Circuits, calibration, alarms & Multi-channel re-constitution. Hospital requirements – Multi-parameter bed-side monitors, Central Nursing Stations, Defibrillators, Ventilators, Catheters, Incubators.	10

3	**Life-Support & Treatment:** Cardiac Support: Implantable & programmable Pacemakers, External & Internal Defibrillators, Coronary Angiography. Electro-physiotherapy: Shortwave & ultrasonic diathermy, Transcutaneous. Nerve Stimulators in pain relief, Traction Systems, Ultrasound in bone fracture regeneration, hypothermia & hyperthermia systems.	10

	Lasers in treatment and surgery : Opthalmic, Ablators, Endoscopic. Assists and Artificial limbs- Orthoses , passive and powered Prostheses	
4	**Imaging:** Fundamentals of X-Rays, Radiological Imaging, Digital Radiology, DSA. Computer Tomography, Image Processing, solid state sensors, whole-body scans. Gamma camera & radio- isotope imaging. Ultrasonography- Transducers, Signal Conditioners, 2D & 3D scans, Doppler & Colour Doppler. Fundamentals of Magnetic Resonance Imaging and PET – scans.	12

Text Books:

1. Handbook of Biomedical Instrumentation , R S Khandpur, Tata –Mcgraw Hill Education [Partly Downloadable]
2. Understanding the Human Machine- A Primer for Bioengineering, M E Valentiniuzzi [Freely Downloadable in PDF], World Scientific Publishing Co.
3. Biomedical Instrumentation and Measurements, L Cornwell, F.J. Weibell & E.A. Pfeiffer, Prentice Hall.
4. Medical Instrumentation – Application & Design, J G Webster & J W. Clark , Houghton Miffin Publication.
5. Introduction to Bio-medical Equipment Technology, J J Carr & JM Brown Regents , Prentice Hall.
6. Design of Micro- controller based Medical Instrumentation, J Tompkins & J G Webster, Prentice Hall Inc

Reference Books:

1. A systems approach to Biomedicine, W.B. Blesser , McGraw Hill..
2. Biomedical Engineering, J H U Brown, J E Jacobs & L Stark, Davis Co, Philadelphia, USA.
3. Principles of Applied Biomedical Instrumentation, L A Geddes & L E Baker, John Wiley & sons.
4. Biological Control Systems, J H Milsum, Mc Graw Hill.
5. Bioelectric Phenomena, R Plonsey, McGraw-Hill.

PROCESS CONTROL EE-802D

Credit: 3 **Contact: 3L**

Module	Content	Hour
1	General review of process, Process control & automation, Servo and regulatory control, Basic process control loop block diagram. Characteristic parameter of a process, Process quality, Process potential, Process resistance, Process capacitance, Process lag, Self regulation. Process modeling, Process equations-their limitations-general approach,. Typical processes and derivation of their functions. Characteristics and functions of different modes of control actions, Schemes and analysis of On-Off, Multistep, Floating, Time proportional, PID control. Effect of disturbances and variation in set point in process control. Offset-why it appears and how it is eliminated-analysis and mathematical treatment.	10
2	Process reaction curves, Controllability-using (i) deviation reduction factors (ii) gain bandwidth product, State controllability. Tuning controllers: both closed and open loop methods (Ziegler-Nichols, Cohen, PRC method and 3-C method of parameter adjustment) Electronic PID controller design Pneumatic controllers-brief analysis.	08
3	Different control strategies-schemes, brief analysis and uses (i) Ratio control (ii) Cascade control (iii) Feed forward control (iv) Multivariable control	06

4	Final control element: actuators (Pneumatic actuators, Electrical actuators) and control valves (Globe, Ball. Butterfly, Gate, Pinch), different parts, Fail Position, Valve Characteristics, Cv, single & Double seated valves, Valve sizing, Valve selection,	

	Cavitation, Flashing, Noise. Control valve accessories- Air filter regulator, I/P converter, Pneumatic positioner, Electro Pneumatic positioner, limit switches, Motion transmitter. Brief study of safety valves and Solenoid valves.	08
5	Introduction to Programmable Logic controllers- Basic Architecture and function, Input- output modules and interfacing, CPU and memory, Relays, Timers, Counters and their uses, PLC programming and applications, Introduction to DCS	08

Numerical problems to be solved in the tutorial classes.

Text Books:

4. Principle of Process control, D. Patranabis, TMH
5. Automatic Process Control, D.P. Eckman, John Wiley.
6. Process control, P. Harriott, Mc Graw Hill

Reference Books:

7. Chemical process control, G. Stephanpoulos, PHI
8. Process control instrumentation technology, C.D. Johnson, PHI
9. Process Control-Principles and application, S. Bhanot, Oxford University press.
10. Process Control, S.K. Singh, PHI
11. Process dynamic & Control, S. Sundaram, Cengage Learning.
12. Instrument Engineers Handbook, B.G. Liptak, Chilton Book Co. Philadelphia.

Practical

ELECTRICAL SYSTEMS LABORATORY-II EE-882

Credit: 4 **Contact: 6L**

The students would INDIVIDUALLY design the equipment and systems as per specifications provided by the class teacher following established procedures.
For each student, one item from each of the four groups would be chosen.

- For unspecified items of specification and or specifications of wires, cables etc., data should be taken by students from handbooks and Indian standard.
- Students should spend the allotted periods for carrying out design computations. Their attendance shall be recorded.
- Students should maintain a dedicated bound notebook for recording design activities like calculations, formulae used, sketches, flowcharts etc. The notebook should be regularly submitted to the class teacher for review and signature.
- Evaluation would be based on (i) Class attendance (20%), (ii) Design Note Book (30%) (iii) Design Report (30%) (iv) End of semester viva (20%, preferably by an external examiner)
- Topics of group A, B & C covered in 7th semester (EE-782)` are not to be attempted in the 8th semester (EE-892)

Group-A	• Designing a heating element with specified wattage, voltage and ambient temperature. • Designing an air core grounding reactor with specified operating voltage, nominal current and fault current.

Syllabus for B.Tech(Electrical Engineering) Up to Fourth

Group-B	• Designing the power distribution system for a small township. • Designing a double circuit transmission line for a given voltage level and power (MVA) transfer. • Wiring and installation design of a multistoried residential building (G+4,not less than 16 dwelling flats with a lift and common pump) • Designing of a substation

Syllabus for B.Tech(Electrical Engineering) Up to Fourth

Group-C	• Designing an ONAN distribution transformer. • Designing a three phase squirrel cage induction motor. • Designing a three phase wound rotor induction motor. • Designing a split phase squirrel cage induction motor for a ceiling fan or a domestic pump. • Designing a permanent magnet fractional hp servo motor.
Group-D	• Design the control circuit of a Lift mechanism • Design a controller for speed control of DC machine. • Design a controller for speed control of AC machine.

Syllabus for B.Tech(Information Technology) Up to Fourth

IT

Second Year - Third Semester

A. THEORY							
Sl.No.	**Field**	**Theory**	**Contact Hours/Week**				**Cr. Points**
			L	**T**	**P**	**Total**	
1	**HU301**	Values & Ethics in Profession	3	0	0	3	3
2	**PH301**	Physics-2	3	1	0	4	4
3	**CH301**	Basic Environmental Engineering & Elementary Biology;	3	0	0	3	3
4	**CS301**	Analog & Digital Electronics	3	0	0	3	3
5	**CS302**	Data Structure & Algorithm	3	1	0	4	4
6	**CS303**	Computer Organisation	3	1	0	4	4
Total of Theory						**21**	**21**
B. PRACTICAL							
7	**PH391**	Physics-2	0	0	3	3	2
8	**CS391**	Analog & Digital Electronics	0	0	3	3	2
9	**CS392**	Data Structure & Algorithm	0	0	3	3	2
10	**CS393**	Computer Organisation	0	0	3	3	2
Total of Practical						**12**	**8**
Total of Semester						**33**	**29**

Second Year - Fourth Semester

A. THEORY							
Sl.No.	**Field**	**Theory**	**Contact Hours/Week**				**Cr. Points**
			L	**T**	**P**	**Total**	
1	**M(CS)401**	Numerical Methods	2	1	0	3	2
2	**M401**	Mathematics-3	3	1	0	4	4
3	**CS401**	Communication Engg & Coding Theory	**2**	0	0	3	3
4	**CS402**	Formal Language & Automata Theory	3	1	0	4	4
5	**IT401**	Object Oriented Programming & UML	3	1	0	4	4
Total of Theory						**18**	**17**
B. PRACTICAL							
6	**HU481**	Technical Report Writing & Language Lab Practice	0	0	3	3	2
7	**M(CS)491**	Numerical Methods	0	0	2	2	1
8	**CS491**	Communication Engg & Coding Theory	0	0	3	3	2
9	**CS492**	Software Tools	0	0	3	3	2
10	**IT491**	Object Oriented Programming & UML (IT)	0	0	3	3	2
Total of Practical						**14**	**9**
Total of Semester						**32**	**26**

Syllabus for B.Tech(Information Technology) Up to Fourth

Third Year - Fifth Semester

A. THEORY							
Sl.No	**Field**	**Theory**	**Contact Hours/Week**				**Cr. Pts**
			L	**T**	**P**	**Total**	
1	**HU501**	Economics for Engineers	3	0	0	3	3
2	**IT501**	Design & Analysis of Algorithm	3	**1**	0	4	4
3	**IT502**	Computer Architecture	3	**1**	0	4	4
4	**IT503**	Operating System	3	0	0	3	3
5	**F. E.** **IT504A** **IT504B** **IT504C** **IT504D** **IT504E** **IT504F**	Circuit Theory & Network (EE) Data Communication (ECE) Digital Signal Processing (ECE) Operation Research (M) Microprocessors & Microcontrollers(CSE) Programming Practices using C++	3	**0/1**	0	3/4	3/4
Total of Theory						**17/18**	**17-18**
B. PRACTICAL							
6	**IT591**	Algorithm Lab	0	0	3	3	2
7	**IT592**	Computer Architecture	0	0	3	3	2
8	**IT593**	Operating System Lab	0	0	3	3	2
9	**F.E.** **IT594A** **IT594B** **IT594C** **IT594D** **IT594E** **IT594F**	A. Circuit Theory & Network (EE) B. Data Communication (ECE) C. Digital Signal Processing (ECE) D. Operation Research (M) E. Microprocessors & Microcontrollers(CSE) F. Programming Practices using C++	0	0	3	3	2
Total of Practical						**12**	**8**
Total of Semester						**29/30**	**25-26**

Syllabus for B.Tech(Information Technology) Up to Fourth

Third Year - Sixth Semester

A. THEORY							
Sl.No.	**Field**	**Theory**	**Contact Hours/Week**				**Cr. Pts**
			L	**T**	**P**	**Total**	
1	**HU601**	Principles of Management	2	0	0	2	2
2	**IT.601**	Data Base Management System	3	0	0	3	3
3	**IT602**	Computer Networking	3	0	0	3	3
4	**IT603**	Software Engg	3	0	0	3	3
5	**P.E.**		3	0	0	3	3
	IT604A	Information Theory & Coding					
	IT604B	Computer Graphics					
	IT604C	Pattern Recognition					
	IT604D	ERP					
6	**F. E.**		3	0/1	0	3/4	3/4
	IT605A	Discrete Mathematics (M)					
	IT605B	Human Resource Management					
	IT605C	(HSS)					
	IT605D	Compiler Design (CSE)					
		Artificial Intelligence (CSE)					
Total of Theory						**17/18**	**17-18**
B. PRACTICAL							
7	**IT691**	Data Base Management System	0	0	3	3	2
8	**IT692**	Lab	0	0	3	3	2
9	**IT693**	Computer Networking Software Engineering	0	0	3	3	2
10	**IT681**	**Seminar**	**0**	**0**	**3**	**3**	**2**
Total of Practical						**12**	**8**
Total of Semester						**29/30**	**25-26**

Syllabus for B.Tech(Information Technology) Up to Fourth

Fourth Year - Seventh Semester

2.1.1.1.1. A. THEORY							
Sl. No.	**Field**	**Theory**	**Contact Hours/Week**				**Cr. Pts**
			L	**T**	**P**	**Total**	
1	**IT701**	Internet Technology	3	0	0	3	3
2	**IT702**	Multimedia	3	0	0	3	3
3	**IT703**	A. E-Commerce B. Soft Computing C. Image Processing	3	0	0	3	3
4	**IT704**	A. Distributed Operating System B. Cloud Computing C. Data Warehousing & Data Mining D. Sensor Networks E. Mobile Computing	3	0	0	3	3
5	**IT705**	A. Bio Informatics (BI) B. Control System (EE) C. Modelling & Simulation (M) D. Microelectronics & VLSI Design(ECE) E. Advanced Data Communication & Coding	3	0	0	3	3
Total of Theory						**15**	**15**
B. PRACTICAL							
6	**HU781**	Group Discussion	0	0	3	3	2
7	**IT791**	Internet Technology	0	0	3	3	2
8	**IT792**	Multimedia	0	0	3	3	2
9	**IT793**	A. E-Commerce B. Soft Computing C. Image Processing	0	0	3	3	2
10	**IT794**	Industrial training	4 wks during 6th -7th Sem-break				2
11	**IT795**	Project-1				3	2
Total of Practical						**15**	**12**
Total of Semester						**30**	**27**

Syllabus for B.Tech(Information Technology) Up to Fourth

Fourth Year - Eighth Semester

2.1.1.1.2. A. THEORY							
Sl. No.	**Field**	**Theory**	**Contact Hours/Week**				**Cr. Pts**
			L	**T**	**P**	**Total**	
1	**HU801A** **HU801B**	A. Organisational Behaviour B. Project Management	2	0	0	2	2
2	**IT801**	A. Advanced Computer Architecture B. Parallel Computing C. Natural Language Processing D. Cryptography & Network Security)	3	0	0	3	3
3	**IT802**	A. Technology Management (HSS) B. Cyber Law & Security Policy (HSS) C. Optical Networking (ECE) D. Low Power Circuits & Systems (ECE) E. Business Analytics(CSE) F. Robotics(EE & ME	3	0	0	3	3
Total of Theory						**8**	**8**
2.1.1.1.3. B. PRACTICAL							
4	**IT891**	Design Lab / Industrial problem related practical training	0	0	6	6	4
5	**IT892**	Project-2	0	0	12	12	6
6	**IT893**	Grand Viva					3
Total of Practical						**18**	**13**
Total of Semester						**26**	**21**

Syllabus for B.Tech(Information Technology) Up to Fourth

SEMESTER - III
Theory

VALUES & ETHICS IN PROFESSION

HU-301
Contracts:3L
Credits- 3

Science, Technology and Engineering as knowledge and as Social and Professional Activities

Effects of Technological Growth:

Rapid Technological growth and depletion of resources, Reports of the Club of Rome. Limits of growth: sustainable development
Energy Crisis: Renewable Energy Resources
Environmental degradation and pollution. Eco-friendly Technologies. Environmental Regulations, Environmental Ethics
Appropriate Technology Movement of Schumacher; later developments
Technology and developing notions. Problems of Technology transfer, Technology assessment impact analysis.
Human Operator in Engineering projects and industries. Problems of man, machine, interaction, Impact of assembly line and automation. Human centered Technology.

Ethics of Profession:

Engineering profession: Ethical issues in Engineering practice, Conflicts between business demands and professional ideals. Social and ethical responsibilities of Technologists. Codes of professional ethics. Whistle blowing and beyond, Case studies.

Profession and Human Values:

Values Crisis in contemporary society
Nature of values: Value Spectrum of a good life Psychological
values: Integrated personality; mental health
Societal values: The modern search for a good society, justice, democracy, secularism, rule of law, values in Indian Constitution.
Aesthetic values: Perception and enjoyment of beauty, simplicity, clarity
Moral and ethical values: Nature of moral judgements; canons of ethics; ethics of virtue; ethics of duty; ethics of responsibility.

Books:

1. Stephen H Unger, Controlling Technology: Ethics and the Responsible Engineers, John Wiley & Sons, New York 1994 (2nd Ed)
2. Deborah Johnson, Ethical Issues in Engineering, Prentice Hall, Englewood Cliffs, New Jersey 1991.
3. A N Tripathi, Human values in the Engineering Profession, Monograph published by IIM, Calcutta 1996.

Physics-2 Code:
PH-301
Contacts: 4L
Credit: 3+1

Module 1:

Vector Calculus:

1.1 Physical significances of grad, div, curl. Line integral, surface integral, volume integral- physical examples in the context of electricity and magnetism and statements of Stokes theorem and Gauss theorem [No Proof]. Expression of grad, div, curl and Laplacian in Spherical and Cylindrical co-ordinates. 2L

Module 2 :

Electricity

Coulumbs law in vector form. Electrostatic field and its curl. Gauss's law in integral form and conversion to differential form .

Electrostatic potential and field, Poisson's Eqn. Laplace's eqn (Application to Cartesian, Spherically and Cylindrically

symmetric systems – effective 1D problems) Electric current, drift velocity, current density, continuity equation, steady current.

5L

Dielectrics-concept of polarization, the relation D=ε0E+P, Polarizability. Electronic polarization and polarization in monoatomic and polyatomic gases. 3L

Module 3:

Magnetostatics & Time Varying Field:

3. Lorentz force, force on a small current element placed in a magnetic field. Biot-Savart law and its applications, divergence of magnetic field, vector potential, Ampere's law in integral form and conversion to differential form. Faraday's law of electro-magnetic induction in integral form and conversion to differential form. 3L

Module 4:

Electromagnetic Theory:

4.1 Concept of displacement current Maxwell's field equations, Maxwell's wave equation and its solution for free space.

E.M. wave in a charge free conducting media, Skin depth, physical significance of Skin Depth, E.M. energy flow, & Poynting Vector.

6L

Module 5:

Quantum Mechanics:

Generalised coordinates, Lagrange's Equation of motion and Lagrangian, generalised force potential, momenta and energy. Hamilton's Equation of motion and Hamiltonian. Properties of Hamilton and Hamilton's equation of motion.

4L

Course should be discussed along with physical problems of 1-D motion

Concept of probability and probability density, operators, commutator. Formulation of quantum mechanics and Basic postulates, Operator correspondence, Time dependent Schrödinger's equation, formulation of time independent Schrödinger's equation by method of separation of variables, Physical interpretation of wave function ψ (normalization and probability interpretation), Expectation values, Application of Schrödinger equation – Particle in an infinite square well potential (1-D and 3-D potential well), Discussion on degenerate levels. 9L

Module 6:

Statistical Mechanics:

Concept of energy levels and energy states. Microstates, macrostates and thermodynamic probability, equilibrium macrostate. MB, FD, BE statistics (No deduction necessary), fermions, bosons (definitions in terms of spin, examples), physical significance and application, classical limits of quantum statistics Fermi distribution at zero & non-zero temperature, Calculation of Fermi level in metals, also total energy at absolute zero of temperature and total number of particles, Bose-Einstein statistics – Planck's law of blackbody radiation..

Syllabus for B.Tech(Information Technology) Up to Fourth

7L

Syllabus for B.Tech(Information Technology) Up to Fourth

Basic Environmental Engineering & Elementary Biology
Code: CH301
Contacts: 3L = 3
Credits: 3

General

Basic ideas of environment, basic concepts, man, society & environment, their interrelationship.

1L

Mathematics of population growth and associated problems, Importance of population study in environmental engineering, definition of resource, types of resource, renewable, non-renewable, potentially renewable, effect of excessive use vis-à-vis population growth, Sustainable Development. 2L

Materials balance: Steady state conservation system, steady state system with non conservative pollutants, step function.

1L

Environmental degradation: Natural environmental Hazards like Flood, earthquake, Landslide-causes, effects and control/management; Anthropogenic degradation like Acid rain-cause, effects and control. Nature and scope of Environmental Science and Engineering.

2L

Ecology

Elements of ecology: System, open system, closed system, definition of ecology, species, population, community, definition of ecosystem- components types and function. 1L

Structure and function of the following ecosystem: Forest ecosystem, Grassland ecosystem, Desert ecosystem, Aquatic ecosystems, Mangrove ecosystem (special reference to Sundar ban); Food chain [definition and one example of each food chain], Food web.

2L

Biogeochemical Cycle- definition, significance, flow chart of different cycles with only elementary reaction [Oxygen, carbon, Nitrogen, Phosphate, Sulphur]. 1L

Biodiversity- types, importance, Endemic species, Biodiversity Hot-spot, Threats to biodiversity, Conservation of biodiversity.

2L

Air pollution and control

Atmospheric Composition: Troposphere, Stratosphere, Mesosphere, Thermosphere, Tropopause and Mesopause.

1L

Energy balance: Conductive and Convective heat transfer, radiation heat transfer, simple global temperature model [Earth as a black body, earth as albedo], Problems. 1L

Green house effects: Definition, impact of greenhouse gases on the global climate and consequently on sea water level, agriculture and marine food.Global warming and its consequence, Control of Global warming. Earth's heat budget. 1L

Lapse rate: Ambient lapse rate Adiabatic lapse rate, atmospheric stability, temperature inversion (radiation inversion).

Syllabus for B.Tech(Information Technology) Up to Fourth

2L

Atmospheric dispersion: Maximum mixing depth, ventilation coefficient, effective stack height, smokestack plumes and Gaussian plume model. 2L

Definition of pollutants and contaminants, Primary and secondary pollutants: emission standard, criteria pollutant.

Sources and effect of different air pollutants- Suspended particulate matter, oxides of carbon, oxides of nitrogen, oxides of sulphur, particulate, PAN. 2L

Smog, Photochemical smog and London smog.

Depletion Ozone layer: CFC, destruction of ozone layer by CFC, impact of other green house gases, effect of ozone modification. 1L

Standards and control measures: Industrial, commercial and residential air quality standard, control measure (ESP. cyclone separator, bag house, catalytic converter, scrubber (ventury), Statement with brief reference). 1L

Water Pollution and Control

Hydrosphere, Hydrological cycle and Natural water.

Pollutants of water, their origin and effects: Oxygen demanding wastes, pathogens, nutrients, Salts, thermal application, heavy metals, pesticides, volatile organic compounds. 2L

River/Lake/ground water pollution: River: DO, 5 day BOD test, Seeded BOD test, BOD reaction rate constants, Effect of oxygen demanding wastes on river[deoxygenation, reaeration], COD, Oil, Greases, pH. 2L

Lake: Eutrophication [Definition, source and effect]. 1L

Ground water: Aquifers, hydraulic gradient, ground water flow (Definition only) 1L

Standard and control: Waste water standard [BOD, COD, Oil, Grease],

Water Treatment system [coagulation and flocculation, sedimentation and filtration, disinfection, hardness and alkalinity, softening]

Waste water treatment system, primary and secondary treatments [Trickling filters, rotating biological contractor, Activated sludge, sludge treatment, oxidation ponds] tertiary treatment definition. 2L

Water pollution due to the toxic elements and their biochemical effects: Lead, Mercury, Cadmium, and Arsenic 1L

Land Pollution

Lithosphere; Internal structure of earth, rock and soil 1L

Solid Waste: Municipal, industrial, commercial, agricultural, domestic, pathological and hazardous solid wastes; Recovery and disposal method- Open dumping, Land filling, incineration, composting, recycling.

Solid waste management and control (hazardous and biomedical waste). 2L

Noise Pollution

Definition of noise, effect of noise pollution, noise classification [Transport noise, occupational noise, neighbourhood noise] 1L

Definition of noise frequency, noise pressure, noise intensity, noise threshold limit value, equivalent noise level, L_{10} (18 hr Index) , Ld_n .

Noise pollution control. 1L

Syllabus for B.Tech(Information Technology) Up to Fourth

Environmental Management:

Environmental impact assessment, Environmental Audit, Environmental laws and protection act of India, Different international environmental treaty/ agreement/ protocol. 2L

References/Books

1. Masters, G. M., "Introduction to Environmental Engineering and Science", Prentice-Hall of India Pvt. Ltd., 1991.
2. De, A. K., "Environmental Chemistry", New Age International.

Analog & Digital Electronics
Code: CS301
Contact: 3L Cr:
3

Pre-requisite of Analog Electronics: Basic Electronics Parts I & II learned in the First year, semesters 1 & 2. Basic concept of the working of P-N diodes, Schottky diodes, Basic BJTs, Basic FETs and OPAMP as a basic circuit component. Concept of Feedback.

Module -1: [9L]

3. Different Classes of Amplifiers - (Class-A, B, AB and C - basic concepts, power, efficiency [2L]; Recapitulation of basic concepts of Feedback and Oscillation [1L], Phase Shift, Wein Bridge oscillators [2L]. (5L)
4. Astable & Monostable Multivibrators [1L]; Schimtt Trigger circuits [1L], 555 Timer [2L]. (4L)

[***Learning Outcome***: The learner will be trained to compare the merits and demerits of the different amplifiers and must be able to bias the transistors accordingly; the student must be able to design multivibrator circuits using 555 timers]

Pre-requisite of Digital Electronics: Binary numbers & Basic Boolean algebra – already covered in First year; Logic gates, Truth Tables and function realization – already covered in First year upto minimisation of Logic expressions by algebraic method, K-map,

Module – 2: [11 L]

1. Binary Number System & Boolean Algebra (recapitulation) [1L]; BCD, ASCII, EBDIC, Gray codes and their conversions [1L]; Signed binary number representation with 1's and 2's complement methods [1L], Binary arithmetic, Venn diagram, Boolean algebra (recapitulation) [1L]; Representation in SOP and POS forms [1L]; Minimization of logic expressions by algebraic method. [2L] (7L)
2. Combinational circuits - Adder and Subtractor circuits (half & full adder & subtractor) [2L]; Encoder, Decoder, Comparator, Multiplexer, De-Multiplexer and Parity Generator [2L]. (4L)

Module - 3: [10L]

a) Sequential Circuits - Basic Flip-flop & Latch [1L], Flip-flops -SR, JK, D, T and JK Master-slave Flip Flops [3L], (4L)

b) Registers (SISO,SIPO,PIPO,PISO) [2L], Ring counter, Johnson counter [1L], Basic concept of Synchronous and Asynchronous counters (detail design of circuits excluded), [2L], Design of Mod N Counter [2L] (6L)

Module – 4: [6L]

1. A/D and D/A conversion techniques – Basic concepts (D/A :R-2-R only [2L] A/D: successive approximation [2L]) (4L)
2. Logic families- TTL, ECL, MOS and CMOS - basic concepts. (2L)

[***Learning Outcome***: The student must be able to convert from one number system to another, work out problems related to Boolean algebra, minimisation problems etc. The student must also learn to differentiate between the combinational and sequential circuits and design simple circuits)

Total: 36 hours

Textbooks:

Microelectronics Engineering - Sedra & Smith-Oxford.
Principles of Electronic Devices & circuits—B L Thereja & Sedha—S Chand

Syllabus for B.Tech(Information Technology) Up to Fourth

Digital Electronics – Kharate – Oxford
Digital Electronics – Logic & Systems by J.Bigmell & R.Donovan; Cambridge Learning.
Digital Logic and State Machine Design (3rd Edition) – D.J.Comer, OUP

Reference:

Electronic Devices & Circuit Theory – Boyelstad & Nashelsky - PHI
Bell-Linear IC & OP AMP—Oxford
P.Raja- Digital Electronics- Scitech Publications
Morries Mano- Digital Logic Design- PHI
R.P.Jain—Modern Digital Electronics, 2/e , Mc Graw Hill
H.Taub & D.Shilling, Digital Integrated Electronics- Mc Graw Hill. D.Ray
Chaudhuri- Digital Circuits-Vol-I & II, 2/e- Platinum Publishers Tocci,
Widmer, Moss- Digital Systems,9/e- Pearson
J.Bignell & R.Donovan-Digital Electronics-5/e- Cenage Learning. Leach &
Malvino—Digital Principles & Application, 5/e, Mc Graw Hill Floyed &
Jain- Digital Fundamentals-Pearson.

Data Structure & Algorithm
Code: CS302
Contacts: 3L +1T
Credits: 4

Pre-requisites: CS 201 (Basic Computation and Principles of C), M101 & M201 (Mathematics), basics of set theory

Module -I. [8L] Linear Data Structure Introduction
(2L):
Why we need data structure?
Concepts of data structures: a) Data and data structure b) Abstract Data Type and Data Type.
Algorithms and programs, basic idea of pseudo-code.
Algorithm efficiency and analysis, time and space analysis of algorithms – order notations.
Array (2L):
Different representations – row major, column major.
Sparse matrix - its implementation and usage. Array representation of polynomials.
Linked List (4L):
Singly linked list, circular linked list, doubly linked list, linked list representation of polynomial and applications.

Module -II: [7L] Linear Data Structure
[Stack and Queue (5L):
Stack and its implementations (using array, using linked list), applications.
Queue, circular queue, dequeue. Implementation of queue- both linear and circular (using array, using linked list), applications.
Recursion (2L):
Principles of recursion – use of stack, differences between recursion and iteration, tail recursion.
Applications - The Tower of Hanoi, Eight Queens Puzzle.

Module -III. [15L] Nonlinear Data structures
Trees (9L):
Basic terminologies, forest, tree representation (using array, using linked list).
Binary trees - binary tree traversal (pre-, in-, post- order), threaded binary tree (left, right, full) - non-recursive traversal algorithms using threaded binary tree, expression tree.
Binary search tree- operations (creation, insertion, deletion, searching).
Height balanced binary tree – AVL tree (insertion, deletion with examples only). B-
Trees – operations (insertion, deletion with examples only).
Graphs (6L):
Graph definitions and concepts (directed/undirected graph, weighted/un-weighted edges, sub-graph, degree, cut-vertex/articulation point, pendant node, clique, complete graph, connected components – strongly connected component, weakly connected component, path, shortest path, isomorphism).
Graph representations/storage implementations – adjacency matrix, adjacency list, adjacency multi-list.
Graph traversal and connectivity – Depth-first search (DFS), Breadth-first search (BFS) – concepts of edges used in DFS and BFS (tree-edge, back-edge, cross-edge, forward-edge), applications.
Minimal spanning tree – Prim's algorithm (basic idea of greedy methods).

Module - IV. Searching, Sorting (10L):

Sorting Algorithms (5L): Bubble sort and its optimizations, insertion sort, shell sort, selection sort, merge sort, quick sort, heap sort (concept of max heap, application – priority queue), radix sort.
Searching (2L): Sequential search, binary search, interpolation search.
Hashing (3L): Hashing functions, collision resolution techniques.

Recommended books:

1. "Data Structures And Program Design In C", 2/E by Robert L. Kruse, Bruce P. Leung.
2. "Fundamentals of Data Structures of C" by Ellis Horowitz, Sartaj Sahni, Susan Anderson-freed.
3. "Data Structures in C" by Aaron M. Tenenbaum.
4. "Data Structures" by S. Lipschutz.
5. "Data Structures Using C" by Reema Thareja.
6. "Data Structure Using C", 2/e by A.K. Rath, A. K. Jagadev.
7. "Introduction to Algorithms" by Thomas H. Cormen, Charles E. Leiserson, Ronald L. Rivest, Clifford Stein.

Learning outcome:

Ideally this course should act as a primer/pre-requisite for CS 503 (Design and Analysis of Algorithms). On completion of this course, students are expected to be capable of understanding the data structures, their advantages and drawbacks, **how to implement them in C**, how their drawbacks can be overcome and **what the applications are** and **where they can be used**. Students should be able to learn about the data structures/ methods/algorithms mentioned in the course with a comparative perspective so as to make use of the most appropriate data structure/ method/algorithm in a program to enhance the efficiency (i.e. reduce the run-time) or for better memory utilization, based on the priority of the implementation. Detailed time analysis of the graph algorithms and sorting methods are expected to be covered in CS 503 but it is expected that the students will be able to understand at least the efficiency aspects of the graph and sorting algorithms covered in this course. The students should be able to convert an inefficient program into an efficient one using the knowledge gathered from this course.

Computer organization
Code: CS303
Contacts: 3L +1T
Credits: 4

Pre-requisite: Concept of basic components of a digital computer, Basic concept of Fundamentals & Programme structures. Basic number systems, Binary numbers, representation of signed and unsigned numbers, Binary Arithmetic as covered in Basic Computation & Principles of Computer Programming Second semester, first year. Boolean Algebra, Karnaugh Maps, Logic Gates – covered in Basic Electronics in First year

Module – 1: [8L]
Basic organization of the stored program computer and operation sequence for execution of a program. Role of operating systems and compiler/assembler.
Fetch, decode and execute cycle, Concept of operator, operand, registers and storage, Instruction format.
Instruction sets and addressing modes. [7L]

Commonly used number systems. Fixed and floating point representation of numbers. [1L]

Module – 2: [8L] Overflow and underflow.
Design of adders - ripple carry and carry look ahead principles. [3L]

Design of ALU. [1L]
Fixed point multiplication -Booth's algorithm. [1L]
Fixed point division - Restoring and non-restoring algorithms. [2L]
Floating point - IEEE 754 standard. [1L]

Module – 3: [10L]
Memory unit design with special emphasis on implementation of CPU-memory interfacing. [2L]
Memory organization, static and dynamic memory, memory hierarchy, associative memory. [3L]
Cache memory, Virtual memory. Data path design for read/write access. [5L]

Module – 4: [10L]
Design of control unit - hardwired and microprogrammed control. [3L]
Introduction to instruction pipelining. [2L]
Introduction to RISC architectures. RISC vs CISC architectures. [2L]
I/O operations - Concept of handshaking, Polled I/O, interrupt and DMA. [3L]

Syllabus for B.Tech(Information Technology) Up to Fourth

Learning Outcome:

Additional Tutorial Hours will be planned to meet the following learning outcome.

Through this course, the students will be exposed to extensive development and use of computer organization based concepts for the future knowledge outcome of Advanced Computer Architecture offered in subsequent semester. The students will be able to understand different instruction formats, instruction sets, I/O mechanism. Hardware details, memory technology, interfacing between the CPU and peripherals will be transparent to the students. Students will be able to design hypothetical arithmetic logic unit.

Text Book:
1. Mano, M.M., "Computer System Architecture", PHI.
2. Behrooz Parhami " Computer Architecture", Oxford University Press

Reference Book:
1. Hayes J. P., "Computer Architecture & Organisation", McGraw Hill,
2. Hamacher, "Computer Organisation", McGraw Hill,
3. N. senthil Kumar, M. Saravanan, S. Jeevananthan, "Microprocessors and Microcontrollers" OUP
4. Chaudhuri P. Pal, "Computer Organisation & Design", PHI,
5. P N Basu- "Computer Organization & Architecture" , Vikas Pub

Practical

Physics Lab-2
Code: PH-391
Contacts: (3P)
Credit: (2)

Group 1: Experiments on Electricity and Mangentism

1. Determination of dielectric constant of a given dielectric material.
3. Determination of resistance of ballistic galvanometer by half deflection method and study of variation of logarithmic decrement with series resistance.
4. Determination of the thermo-electric power at a certain temperature of the given thermocouple.
5. Determination of specific charge (e/m) of electron by J.J. Thomson's method.

Group 2: Quantum Physics
6. Determination of Planck's constant using photocell.
7. Determination of Lande'g factor using Electron spin resonance spetrometer.
8. Determination of Stefan's radiation constant
9. Verification of Bohr's atomic orbital theory through Frank-Hertz experiment.
10. Determination of Rydberg constant by studying Hydrogen/ Helium spectrum

Group 3: Modern Physics
11. Determination of Hall co-efficient of semiconductors.
12. Determination of band gap of semiconductors.

13. To study current-voltage characteristics, load response, areal characteristics and spectral response of photo voltaic solar cells.

a) A candidate is required to perform 3 experiments taking one from each group. Initiative should be taken so that most of the Experiments are covered in a college in the distribution mentioned above. Emphasis should be given on the estimation of error in the data taken.

b) In addition a student should perform one more experiments where he/she will have to transduce the output of any of the above experiments or the experiment mentioned in c] into electrical voltage and collect the data in a computer using phoenix or similar interface.

c) Innovative experiment: One more experiment designed by the student or the concerned teacher or both.

Note:

i. Failure to perform each experiment mentioned in b] and c] should be compensated by two experiments mentioned in the above list.
ii. At the end of the semester report should sent to the board of studies regarding experiments, actually performed by the college, mentioned in b] and c]
iii. Experiment in b] and c] can be coupled and parts of a single experiment.

Recommended Text Books and Reference Books:
For Both Physics I and II
1. B. Dutta Roy (Basic Physics)
2. R.K. Kar (Engineering Physics)
3. Mani and Meheta (Modern Physics)
4.. Arthur Baiser (Perspective & Concept of Modern Physics)

Physics I (PH101/201)
Vibration and Waves
5. Kingsler and Frey
6. D.P. Roychaudhury
7. N.K. Bajaj (Waves and Oscillations)
8. K. Bhattacharya
9. R.P. Singh (Physics of Oscillations and Waves)
10. A.B. Gupta (College Physics Vol.II)
11. Chattopadhya and Rakshit (Vibration, Waves and Acoustics)

Optics
1. Möler (Physical Optics)
2. A.K. Ghatak
3. E. Hecht (Optics)
4. E. Hecht (Schaum Series)
5. F.A. Jenkins and H.E. White
6. 6. Chita Ranjan Dasgupta (Degree Physics Vol 3)

Quantum Physics
1. Eisberg and Resnick
2. A.K. Ghatak and S. Lokenathan
3. S.N. Ghoshal (Introductory Quantum Mechanics)
4. E.E. Anderson (Modern Physics)
5. Haliday, Resnick and Crane (Physics vol.III)
6. Binayak Dutta Roy [Elements of Quantum Mechanics]

Crystallography
1. S.O. Pillai (a. Solid state physics b. Problem in Solid state physics)
2. A.J. Dekker
3. Aschroft and Mermin
4. Ali Omar
5. R.L. Singhal
6. Jak Tareen and Trn Kutty (Basic course in Crystallography

Laser and Holography
1. A.K. Ghatak and Thyagarajan (Laser)
2. Tarasov (Laser)
3. P.K. Chakraborty (Optics)
4. B. Ghosh and K.G. Majumder (Optics)
5. B.B. Laud (Laser and Non-linear Optics)
6. Bhattacharyya [Engineering Physics] Oxford

Physics II(PH 301)

Classical Mechanics (For Module 5.1 in PH 301)
H. Goldstein
A.K. Roychaudhuri
R.G. Takwal and P.S. Puranik
Rana and Joag
M. Speigel (Schaum Series)
J.C. Upadhya (Mechanics)

Electricity and Magnetism
3. Reitz, Milford and Christy
4. David J. Griffith
5. D. Chattopadhyay and P.C. Rakshit
6. Shadowitz (The Electromagnetic Field)

Quantum Mechanics
7. Eisberg and Resnick
8. A.K. Ghatak and S. Lokenathan
9. S.N. Ghoshal (Introductory Quantum Mechanics)
10. E.E. Anderson (Modern Physics)
11. Haliday, Resnick and Crane (Physics vol.III)
12. Binayak Dutta Roy [Elements of Quantum Mechanics]

Statistical Mechanics
8. Sears and Sallinger (Kinetic Theory, Thermodynamics and Statistical Thermodynamics)
9. Mondal (Statistical Physics)
10. S.N. Ghoshal (Atomic and Nuclear Physics)
11. Singh and Singh
12. B.B. Laud (Statistical Mechanics)
13. F. Reif (Statistical Mechanics)

Dilectrics
7. Bhattacharyya [Engineering Physics] Oxford

Analog & Digital Electronics
Code: CS391
Contact: 3
Cr: 2

ANALOG: At least any two of the following

1. Design a Class A amplifier
2. Design a Phase-Shift Oscillator
3. Design of a Schmitt Trigger using 555 timer.

DIGITAL : At least any five of the following

3. Design a Full Adder using basic gates and verify its output / Design a Full Subtractor circuit using basic gates and verify its output.
4. Construction of simple Decoder & Multiplexer circuits using logic gates.
5. Realization of RS / JK / D flip flops using logic gates.
6. Design of Shift Register using J-K / D Flip Flop.
7. Realization of Synchronous Up/Down counter.
8. Design of MOD- N Counter
9. Study of DAC .

Any one experiment specially designed by the college.

(Detailed instructions for Laboratory Manual to follow for further guidance. The details will be uploaded in the website from time to time)

Data Structure & Algorithm
Code: CS392
Contacts: 3
Credits: 2

Experiments should include but not limited to :
Implementation of array operations:
Stacks and Queues: adding, deleting elements Circular Queue: Adding & deleting elements Merging Problem :
Evaluation of expressions operations on Multiple stacks & queues :
Implementation of linked lists: inserting, deleting, inverting a linked list. Implementation of stacks & queues using linked lists:

Polynomial addition, Polynomial multiplication
Sparse Matrices : Multiplication, addition.
Recursive and Nonrecursive traversal of Trees
Threaded binary tree traversal. AVL tree implementation
Application of Trees. Application of sorting and searching algorithms
Hash tables implementation: searching, inserting and deleting, searching & sorting techniques.

(Detailed instructions for Laboratory Manual to follow for further guidance. The details will be uploaded in the website from time to time)

Computer organization
Code: CS393
Contacts: 3
Credits: 2

1. Familiarity with IC-chips, e.g.
a) Multiplexer , b) Decoder, c) Encoder b) Comparator Truth Table verification and clarification from Data-book.
2. Design an Adder/Subtractor composite unit .
3. Design a BCD adder.
4. Design of a 'Carry-Look-Ahead' Adder circuit.
5. Use a multiplexer unit to design a composite ALU .
6. Use ALU chip for multibit arithmetic operation.
7. Implement read write operation using RAM IC.
8. (a) & (b) Cascade two RAM ICs for vertical and horizontal expansion.

(Detailed instructions for Laboratory Manual to follow for further guidance. The details will be uploaded in the website from time to time)

SEMESTER - IV

Theory

NUMERICAL METHODS
Code: M (CS) 401
Contacts: 2L+1T
Credits: 2

Approximation in numerical computation: Truncation and rounding errors, Fixed and floating-point arithmetic, Propagation of errors. (4)

Interpolation: Newton forward/backward interpolation, Lagrange's and Newton's divided difference Interpolation. (5)

Numerical integration: Trapezoidal rule, Simpson's 1/3 rule, Expression for corresponding error terms. (3)

Numerical solution of a system of linear equations:
Gauss elimination method, Matrix inversion, LU Factorization method, Gauss-Seidel iterative method. (6)

Numerical solution of Algebraic equation:
Bisection method, Regula-Falsi method, Newton-Raphson method.

(4)

Numerical solution of ordinary differential equation: Euler's method, Runge-Kutta methods, Predictor-Corrector methods and Finite Difference method. (6)

Text Books:

1. C.Xavier: C Language and Numerical Methods.
2. Dutta & Jana: Introductory Numerical Analysis.
3. J.B.Scarborough: Numerical Mathematical Analysis.
4. Jain, Iyengar , & Jain: Numerical Methods (Problems and Solution).

References:

1. Balagurusamy: Numerical Methods, Scitech.
2. Baburam: Numerical Methods, Pearson Education.

3. N. Dutta: Computer Programming & Numerical Analysis, Universities Press.

Syllabus for B.Tech(Information Technology) Up to Fourth

4. Soumen Guha & Rajesh Srivastava: Numerical Methods, OUP.
Srimanta Pal: Numerical Methods, OUP

Subject Name: MATHEMATICS

Code: M 401

Contacts: 3L +1T = 4

Credits: 4

Note 1: The whole syllabus has been divided into five modules. Note 2:

Structure of the question paper

There will be three groups in the question paper. In Group A, there will be one set of multiple choice type questions spreading the entire syllabus from which 10 questions (each carrying one mark) are to be answered. From Group B, three questions (each carrying 5 marks) are to be answered out of a set of questions covering all the five modules. Three questions (each carrying 15 marks) are to be answered from Group C. Each question of Group C will have two or three parts covering not more than two modules. Sufficient questions should to be set covering the whole syllabus for alternatives.

Module I

Theory of Probability: Axiomatic definition of probability. Conditional probability. Independent events and related problems. Bayes theorem (Statement only) & its application. One dimensional random variable. Probability distributions- discrete and continuous. Expectation. Binomial, Poisson, Uniform, Exponential, Normal distributions and related problems. t, χ^2 and F-distribution (Definition only). Transformation of random variables. Central Limit Theorem, Law of large numbers (statement only) and their applications. Tchebychev inequalities (statement only) and its application. **(14L)**

Module II

Sampling theory: Random sampling. Parameter, Statistic and its Sampling distribution. Standard error of statistic. Sampling distribution of sample mean and variance in random sampling from a normal distribution (statement only) and related problems.

Estimation of parameters: Unbiased and consistent estimators. Point estimation. Interval estimation. Maximum likelihood estimation of parameters (Binomial, Poisson and Normal). Confidence intervals and related problems. **(7L)**

Module III

Testing of Hypothesis: Simple and Composite hypothesis. Critical region. Level of significance. Type I and Type II errors. One sample and two sample tests for means and proportions. χ^2 - test for goodness of fit. (**5L)**

Module IV

Advanced Graph Theory: Planar and Dual Graphs. Kuratowski's graphs. Homeomorphic graphs. Eulers formula (n - e + r = 2) for connected planar graph and its generalisation for graphs with connected components. Detection of planarity. Graph colouring. Chromatic numbers of C_n, K_n , $K_{m,n}$ and other simple graphs. Simple applications of chromatic numbers. Upper bounds of chromatic numbers (Statements only). Chromatic polynomial. Statement of four and five colour theorems. **(10L)**

Module V

Algebraic Structures**:** Group, Subgroup, Cyclic group, Permutation group, Symmetric group (S_3), Coset, Normal subgroup, Quotient group, Homomorphism & Isomorphism (

Elementary properties only).

Definition of Ring, Field, Integral Domain and simple related problems. **(12L)**

Text Books:

1. Banerjee A., De S.K. and Sen S.: Mathematical Probability, U.N. Dhur & Sons.
2. Gupta S. C and Kapoor V K: Fundamentals of Mathematical Statistics, Sultan Chand & Sons.
3. Mapa S.K. :Higher Algebra (Abstract & Linear), Sarat Book Distributors.
4. Sen M.K., Ghosh S. and Mukhopadhyay P.: Topics in Abstract Algebra, University Press.

5. West D.B.: Introduction to Graph Theory, Prentice Hall.

References:

1. Babu Ram: Discrete Mathematics, Pearson Education.
2. Balakrishnan: Graph Theory (Schaum's Outline Series), TMH.
3. Chakraborty S.K and Sarkar B.K.: Discrete Mathematics, OUP.
4. Das N.G.: Statistical Methods, TMH.
5. Deo N: Graph Theory with Applications to Engineering and Computer Science, Prentice Hall.
6. Khanna V.K and Bhambri S.K. : A Course in Abstract Algebra, Vikas Publishing House.
7. Spiegel M R., Schiller J.J. and Srinivasan R.A. : Probability and Statistics (Schaum's Outline Series), TMH.
8. Wilson: Introduction to graph theory, Pearson Edication.

Communication Engineering & Coding Theory
Code: CS401
Contacts: 2L
Credits: 3

Module - 1**:** ***Elements of Communication system, Analog Modulation & Demodulation, Noise, SNR*** **Analog-to-Digital Conversion**. (Basic ideas in brief) [8]
[Details: Introduction to Base Band transmission & Modulation (basic concept) ***(1L);*** Elements of Communication systems (mention of transmitter, receiver and channel); origin of noise and its effect, Importance of SNR in system design ***(1L);*** Basic principles of Linear Modulation (Amplitude Modulation) ***(1L);*** Basic principles of Non-linear modulation (Angle Modulation - FM, PM) ***(1L);*** Sampling theorem, Sampling rate, Impulse sampling, Reconstruction from samples, Aliasing ***(1L);*** Analog Pulse Modulation - PAM (Natural & flat topped sampling), PWM, PPM ***(1L);*** Basic concept of Pulse Code Modulation, Block diagram of PCM ***(1L);*** Multiplexing - TDM, FDM ***(1L);***

Module - 2**: Digital Transmission:** [8]
[Details: Concept of Quantisation & Quantisation error, Uniform Quantiser ***(1L);*** Non-uniform Quantiser, A-law & □□law companding (mention only) ***(1L);*** Encoding, Coding efficiency ***(1L);*** Line coding & properties, NRZ & RZ, AMI, Manchester coding PCM, DPCM ***(1L);*** Baseband Pulse Transmission, Matched filter (mention of its importance and basic concept only), Error rate due to noise ***(2L);*** ISI, Raised cosine function, Nyquist criterion for distortion-less base-band binary transmission, Eye pattern, Signal power in binary digital signals ***(2L);***

Module - 3**: Digital Carrier Modulation & Demodulation Techniques:** [8]
[Details: Bit rate, Baud rate ***(1L);*** Information capacity, Shanon's limit ***(1L);*** M-ary encoding, Introduction to the different digital modulation techniques - ASK, FSK, PSK, BPSK, QPSK, mention of 8 BPSK, 16 BPSK ***(2L);*** Introduction to QAM, mention of 8QAM, 16 QAM without elaboration ***(1L);*** Delta modulation, Adaptive delta modulation (basic concept and importance only, no details ***(1L);*** introduction to the concept of DPCM, Delta Modulation, Adaptive Delta modulation and their relevance ***(1L);*** Spread Spectrum Modulation - concept only. ***(1L)***.

Module - 4**: Information Theory & Coding**: [8]
[Details: Introduction, News value & Information content ***(1L);***, Entropy ***(1L);***, Mutual information ***(1L);***, Information rate ***(1L);***, Shanon-Fano algorithm for encoding ***(1L);***, Shannon's Theorem - Source Coding Theorem ***(1L);***, Channel Coding Theorem, Information Capacity Theorem (basic understanding only) ***(1L);***; Error Control & Coding - basic principle only. ***(1L);***

Text Books:
An Introduction to Analog and Digital Communications by Simon Haykin; Published by Wiley India.
Data Communication and Networking by Behrouz A. Forouzan, Published by Tata McGraw-Hill

References:

7. Communication Systems 4th Edition by Simon Haykin; Published by Wiley India (Student Edition)
8. Principles and Analog and Digital Communication by Jerry D Gibson, Published by MacMillan.
9. Communication Systems by A. B. Carlson, Published by McGraw-Hill.
10. Understanding Signals and Systems by Jack Golten, Published by McGraw Hill.

Learning Outcome: [These are the minimum competence to be developed; the students will be encouraged to learn more and acquire better understanding.]
Module -1: The student will be able to differentiate between base-band transmission and modulation and **compute antenna size** from knowledge of carrier frequency; (Tutorial: To identify different communication processes based on these two

methods and appreciate their relative merit and demerit); The learner will be able to **determine the carrier and message frequencies** from the expression for AM signals and Angle modulated signals. Given an expression for a modulated signal, the student must be able to **recognize the type of modulation**. The ability to explain each and every block of the PCM system must be acquired.

Module -2: The student must be able to appreciate the importance of digital modulation over analog modulation in respect of noise immunity (concept); The student will be able to compute the coding efficiency of binary and decimal coding systems; The relative merits and demerits of the different digital modulation techniques to be understood clearly; (Tutorial: Students should be encouraged to find out where these different modulation techniques are used in everyday life); Capability to calculate signal power in digital systems to be mastered.

Module -3: Ability to compute bit rate and baud rate for different signals to be developed; the student must be able to compare between the channel capacity in case of channels of varying band-width and SNR value and predict the maximum data rate possible; The learner must be able to compare the merits and short comings of the basic digital modulation techniques. (Tutorial: Find out the area of application for each with reason for such application)

Module -4: Student will be able to calculate the information content, entropy and information rate for given situations; He/she will be able to appreciate the importance of the different line coding and error coding techniques. (Tutorial: Find out the range of applicability).

Formal Language & Automata Theory
Code: CS402
Contacts: 3L +1T
Credits: 4

Prerequisites of Formal Language & Automata Theory:
Elementary discrete mathematics including the notion of set,function,relation,product,partial order,equivalence relation,graph& tree. They should have a thorough understanding of the principle of mathematical induction.

Module-1: [**13 L**]
Fundamentals: Basic definition of sequential circuit, block diagram, mathematical representation, concept of transition table and transition diagram (Relating of Automata concept to sequential circuit concept) Design of sequence detector, Introduction to finite state model [2L]
Finite state machine: Definitions, capability & state equivalent, kth- equivalent concept [1L] Merger graph, Merger table, Compatibility graph [1L]
Finite memory definiteness, testing table & testing graph. [1L]
Deterministic finite automaton and non deterministic finite automaton. [1L] Transition diagrams and Language recognizers. [1L]
Finite Automata: NFA with Î transitions - Significance, acceptance of languages. [1L]
Conversions and Equivalence: Equivalence between NFA with and without Î transitions. NFA to DFA conversion. [2L]
Minimization of FSM, Equivalence between two FSM's , Limitations of FSM [1L]
Application of finite automata, Finite Automata with output- Moore & Melay machine. [2L]

Learning outcome of Finite Automata:
The student will be able to define a system and recognize the behavior of a system. They will be able to minimize a system and compare different systems.

Module-2: **[8 L]**
Regular Languages : Regular sets. [1L]
Regular expressions, identity rules. Arden's theorem state and prove [1L]
Constructing finite Automata for a given regular expressions, Regular string accepted by NFA/DFA [1L] Pumping lemma of regular sets. Closure properties of regular sets (proofs not required). [1L]
Grammar Formalism: Regular grammars-right linear and left linear grammars. [1L]
Equivalence between regular linear grammar and FA. [1L]
Inter conversion, Context free grammar. [1L]
Derivation trees, sentential forms. Right most and leftmost derivation of strings. (Concept only) [1L]

Learning outcome of Regular Languages and Grammar:
Student will convert Finite Automata to regular expression. Students will be able to check equivalence between regular linear grammar and FA.

Module-3: **[9L]**

Syllabus for B.Tech(Information Technology) Up to Fourth

Context Free Grammars, Ambiguity in context free grammars. [1L]

Minimization of Context Free Grammars. [1L] Chomsky
normal form and Greibach normal form. [1L] Pumping
Lemma for Context Free Languages. [1L]
Enumeration of properties of CFL (proofs omitted). Closure property of CFL, Ogden's lemma & its applications [1L]
Push Down Automata: Push down automata, definition. [1L]
Acceptance of CFL, Acceptance by final state and acceptance by empty state and its equivalence. [1L] Equivalence of CFL and PDA, interconversion. (Proofs not required).[1L]
Introduction to DCFL and DPDA. [1L]

Learning outcome of PDA and context free grammar:
Students will be able to minimize context free grammar. Student will be able to check equivalence of CFL and PDA. They will be able to design Turing Machine.

Module-4: [6L]
Turing Machine : Turing Machine, definition, model [1L]
Design of TM, Computable functions [1L]
Church's hypothesis, counter machine [1L]
Types of Turing machines (proofs not required) [1 L]
Universal Turing Machine, Halting problem [2L]

Learning outcome of Turing Machine :
Students will be able to design Turing machine.

TEXT BOOKS:

"Introduction to Automata Theory Language and Computation", Hopcroft H.E. and Ullman J. D., Pearson education.
"Theory of Computer Science ", Automata Languages and computation", Mishra and Chandrashekaran, 2nd edition, PHI.
"Formal Languages and Automata Theory", C.K.Nagpal, Oxford

REFERENCES:

"Switching & Finite Automata", ZVI Kohavi, 2nd Edn., Tata McGraw Hill
"Introduction to Computer Theory", Daniel I.A. Cohen, John Wiley
"Introduction to languages and the Theory of Computation", John C Martin, TMH
"Elements of Theory of Computation", Lewis H.P. & Papadimitrou C.H. Pearson, PHI.

Object Oriented Programming & UML(Contents Modified) Code:
IT401
Contacts: 3L+1T
Credits: 4

Prerequisites of Object Oriented Programming & UML:

The fundamental point in learning programming is to develop the critical skills of formulating programmatic solutions for real problems. It will be based on basic knowledge of algorithms and procedural programming language. Once the basic skill of writing programs using loop, methods and arrays will be clear then the student can develop object oriented software using class encapsulation and inheritance.

Object oriented design [10 L]
Concepts of object oriented programming language, Major and minor elements, Object, Class, relationships among objects, aggregation, links, relationships among classes-association, aggregation, using, instantiation, meta-class, grouping constructs.
Object oriented concepts [4 L]
Difference between OOP and other conventional programming – advantages and disadvantages. Class, object, message passing, inheritance, encapsulation, polymorphism
Basic concepts of object oriented programming using Java [22 L]
Implementation of Object oriented concepts using Java.

Language features to be covered:
Class & Object proprieties [6L]
Basic concepts of java programming – advantages of java, byte-code & JVM, data types, access specifiers, operators, control statements & loops, array, creation of class, object, constructor, finalize and garbage collection, use of method overloading, this keyword, use of objects as parameter & methods returning objects, call by value & call by reference, static variables & methods, garbage collection, nested & inner classes, basic string handling concepts- String (discuss charAt() , compareTo(), equals(), equalsIgnoreCase(), indexOf(), length() , substring(), toCharArray() , toLowerCase(), toString(), toUpperCase() ,

trim() , valueOf() methods) & StringBuffer classes (discuss append(), capacity(), charAt(), delete(), deleteCharAt(), ensureCapacity(), getChars(), indexOf(), insert(), length(), setCharAt(), setLength(), substring(), toString() methods), concept of mutable and immutable string, command line arguments, basics of I/O operations – keyboard input using BufferedReader & Scanner classes.

Reusability properties[6L] – Super class & subclasses including multilevel hierarchy, process of constructor calling in inheritance, use of super and final keywords with super() method, dynamic method dispatch, use of abstract classes & methods, interfaces. Creation of packages, importing packages, member access for packages.

Exception handling & Multithreading [6L] – Exception handling basics, different types of exception classes, use of try & catch with throw, throws & finally, creation of user defined exception classes.

Basics of multithreading, main thread, thread life cycle, creation of multiple threads, thread priorities, thread synchronization, inter-thread communication, deadlocks for threads, suspending & resuming threads.

Applet Programming (using swing) [4L] – Basics of applet programming, applet life cycle, difference between application & applet programming, parameter passing in applets, concept of delegation event model and listener, I/O in applets, use of repaint(), getDocumentBase(), getCodeBase() methods, layout manager (basic concept), creation of buttons (JButton class only) & text fields.

Textbooks/References:

1. Rambaugh, James Michael, Blaha – "Object Oriented Modelling and Design" – Prentice Hall, India
2. Ali Bahrami – "Object Oriented System Development" – Mc Graw Hill
3. Patrick Naughton, Herbert Schildt – "The complete reference-Java2" – TMH
4. R.K Das – "Core Java For Beginners" – VIKAS PUBLISHING
5. Deitel and Deitel – "Java How to Program" – 6th Ed. – Pearson
6. Ivor Horton's Beginning Java 2 SDK – Wrox
7. E. Balagurusamy – " Programming With Java: A Primer" – 3rd Ed. – TMH

Practical

Communication Skill & Report Writing
Code: HU481
Cr-2
Guidelines for Course Execution:

Objectives of this Course: This course has been designed:

1. **To inculcate a sense of confidence in the students.**
2. **To help them become good communicators both socially and professionally.**
3. **To assist them to enhance their power of Technical Communication.**

Detailed Course Outlines:

A. ***Technical Report Writing*** : 2L+6P

1. Report Types (Organizational / Commercial / Business / Project)
2. Report Format & Organization of Writing Materials
3. Report Writing (Practice Sessions & Workshops)

B. Language Laboratory Practice

I. Introductory Lecture to help the students get a clear idea of Technical Communication & the need of Language Laboratory

Practice Sessions 2L

2. Conversation Practice Sessions: (To be done as real life interactions) 2L+4P

a) Training the students by using Language Lab Device/Recommended Texts/cassettes /cd's to get their Listening Skill & Speaking Skill honed

b) Introducing Role Play & honing over all Communicative Competence

3. Group Discussion Sessions: 2L+6P

a) Teaching Strategies of Group Discussion

b) Introducing Different Models & Topics of Group Discussion

c) Exploring Live /Recorded GD Sessions for mending students' attitude/approach & for taking remedial measure

Interview Sessions; 2L+6P

- ***a) Training students to face Job Interviews confidently and successfully***
- ***b) Arranging Mock Interviews and Practice Sessions for integrating Listening Skill with Speaking Skill in a formal situation for effective communication***

4. Presentation: 2L+6P

a) Teaching Presentation as a skill
b) Strategies and Standard Practices of Individual /Group Presentation
c) Media & Means of Presentation: OHP/POWER POINT/ Other Audio-Visual Aids

5. Competitive Examination: 2L+2P

a) Making the students aware of Provincial /National/International Competitive Examinations
b) Strategies/Tactics for success in Competitive Examinations
c) SWOT Analysis and its Application in fixing Target

Books – Recommended:

Nira Konar: English Language Laboratory: A Comprehensive Manual PHI Learning, 2011

D. Sudharani: Advanced Manual for Communication Laboratories & Technical Report Writing Pearson Education (W.B. edition), 2011

References:

Adrian Duff et. al. (ed.): Cambridge Skills for Fluency
A) Speaking (Levels 1-4 Audio Cassettes/Handbooks)
B) Listening (Levels 1-4 Audio Cassettes/Handbooks)
Cambridge University Press 1998

Mark Hancock: English Pronunciation in Use
4 Audio Cassettes/CD'S OUP 2004

NUMERICAL METHODS
Code : M(CS) 491
Contacts : 2L
Credits :1

1. Assignments on Newton forward /backward, Lagrange's interpolation.
2. Assignments on numerical integration using Trapezoidal rule, Simpson's 1/3 rule, Weddle's rule.
3. Assignments on numerical solution of a system of linear equations using Gauss elimination and Gauss-Seidel iterations.
4. Assignments on numerical solution of Algebraic Equation by Regular-falsi and Newton Raphson methods.
5. Assignments on ordinary differential equation: Euler's and Runga-Kutta methods.
6. Introduction to Software Packages: Matlab / Scilab / Labview / Mathematica.

Communication Engineering & Coding Theory
Code : CS 491
Contacts : 3L
Credits :2

Practical Designs & Experiments:
Module - 1: Generation of Amplitude Modulation (Design using transistor or Balanced Modulator Chip (to view the wave shapes)
Module - 2: Generation of FM using VCO chip (to view the wave shapes)
Module - 3: Generation of PAM
Module - 4: Generation of PWM & PPM (using IC 555 Timer)

Software Tools
Code : CS 492
Contacts : 3L
Credits :2

8. Introduction to Visual Basic & difference with BASIC. Concept about form Project, Application, Tools, Toolbox,
i. Controls & Properties. Idea about Labels, Buttons,

Syllabus for B.Tech(Information Technology) Up to Fourth

Text Boxes.

ii. Data Basics, Different Type Variables & their use in VB,

iii. Sub-functions & Procedure details, Input box () & Msgbox ().

iv. Making decisions, looping
v. List boxes & Data lists, List Box control, Combo Boxes, data Arrays.
vi. Frames, buttons, check boxes, timer control,
vii. Programming with data, ODBC data base connectivity.
viii. Data form Wizard, query, and menus in VB Applications,
ix. Graphics.

9. Case studies using any of the following items including relevant form design with the help of visual programming aids.
   a) Payroll accounting system.
   b) Library circulation management system.
   c) Inventory control system.
   d) University examination & grading system.
   e) Patient information system.
   f) Tourist information system.
   g) Judiciary information system.
   h) Flight reservation system.
   i) Bookshop automation software.
   j) Time management software.

Object Oriented Programming & UML(Contents Modified) Code: IT491
Contacts: 3
Credits: 2

1. Assignments on class, constructor, overloading, inheritance, overriding
2. Assignments on wrapper class, arrays
3. Assignments on developing interfaces- multiple inheritance, extending interfaces
4. Assignments on creating and accessing packages
5. Assignments on multithreaded programming
6. Assignments on applet programming

Note: Use Java for programming
Preferably download "**java_ee_sdk-6u4-jdk7-windows.exe**" from **http://www.oracle.com/technetwork/java/javaee/downloads/java-ee-sdk-6u3-jdk-7u1-downloads-523391.html** Since UML is removed from CS504D/IT401 and introduced in CS602/IT602, syllabus of CS602/IT602 needs to be re- modeled. New CS602/IT602 syllabus is as follows:

Syllabus for B.Tech(Information Technology) Up to Fourth

SEMESTER – V
Theory

Economics for Engineers
HU-501
Contracts: 3L
Credits- 3

Module-I
1. Economic Decisions Making – Overview, Problems, Role, Decision making process.
2. Engineering Costs & Estimation – Fixed, Variable, Marginal & Average Costs, Sunk Costs, Opportunity Costs, Recurring And Nonrecurring Costs, Incremental Costs, Cash Costs vs Book Costs, Life-Cycle Costs; Types Of Estimate, Estimating Models - Per-Unit Model, Segmenting Model, Cost Indexes, Power-Sizing Model, Improvement & Learning Curve, Benefits.

Module-II
3. Cash Flow, Interest and Equivalence: Cash Flow – Diagrams, Categories & Computation, Time Value of Money, Debt repayment, Nominal & Effective Interest.
4. Cash Flow & Rate Of Return Analysis – Calculations, Treatment of Salvage Value, Annual Cash Flow Analysis, Analysis Periods; Internal Rate Of Return, Calculating Rate of Return, Incremental Analysis; Best Alternative Choosing An Analysis Method, Future Worth Analysis, Benefit-Cost Ratio Analysis, Sensitivity And Breakeven Analysis. Economic Analysis In The Public Sector - Quantifying And Valuing Benefits & drawbacks.

Module-III
5. Inflation And Price Change – Definition, Effects, Causes, Price Change with Indexes, Types of Index, Composite vs Commodity Indexes, Use of Price Indexes In Engineering Economic Analysis, Cash Flows that inflate at different Rates.
6. Present Worth Analysis: End-Of-Year Convention, Viewpoint Of Economic Analysis Studies, Borrowed Money Viewpoint, Effect Of Inflation & Deflation, Taxes, Economic Criteria, Applying Present Worth Techniques, Multiple Alternatives.
7. Uncertainty In Future Events - Estimates and Their Use in Economic Analysis, Range Of Estimates, Probability, Joint Probability Distributions, Expected Value, Economic Decision Trees, Risk, Risk vs Return, Simulation, Real Options.

Module-IV
8. Depreciation - Basic Aspects, Deterioration & Obsolescence, Depreciation And Expenses, Types Of Property, Depreciation Calculation Fundamentals, Depreciation And Capital Allowance Methods, Straight-Line Depreciation Declining Balance Depreciation, Common Elements Of Tax Regulations For Depreciation And Capital Allowances.
9. Replacement Analysis - Replacement Analysis Decision Map, Minimum Cost Life of a New Asset, Marginal Cost, Minimum Cost Life Problems.
10. Accounting – Function, Balance Sheet, Income Statement, Financial Ratios Capital Transactions, Cost Accounting, Direct and Indirect Costs, Indirect Cost Allocation.

Readings

1. James L.Riggs,David D. Bedworth, Sabah U. Randhawa : Economics for Engineers 4e , Tata McGraw-Hill
2. Donald Newnan, Ted Eschembach, Jerome Lavelle : Engineering Economics Analysis, OUP
3. John A. White, Kenneth E.Case,David B.Pratt : Principle of Engineering Economic Analysis, John Wiley
4. Sullivan and Wicks: Engineering Economy, Pearson
5. R.Paneer Seelvan: Engineering Economics, PHI
6. Michael R Lindeburg : Engineering Economics Analysis, Professional Pub

Design & Analysis of Algorithm
Code: IT501
Contact: 3L + 1T
Credits: 4

Complexity Analysis:[2L]
Time and Space Complexity, Different Asymptotic notations – their mathematical significance

Algortihm Design Techniques:
Divide and Conquer: [3L]
Basic method, use, Examples – Binary Search, Merge Sort, Quick Sort and their complexity Heap Sort and its complexity [1L]
Dynamic Programming: [3L]
Basic method, use, Examples – Matrix Chain Manipulation, All pair shortest paths, single source shortest path.
Backtracking: [2L]

Basic method, use, Examples – 8 queens problem, Graph coloring problem. Greedy Method: [3L]

Basic method, use, Examples – Knapsack problem, Job sequencing with deadlines, Minimum cost spanning tree by Prim's and Kruskal's algorithm.

Lower Bound Theory: [1L]
O(nlgn) bound for comparison sort

Disjoint set manipulation: [2L]
Set manipulation algorithm like UNION-FIND, union by rank.

Graph traversal algorithm: Recapitulation [1L]
Breadth First Search(BFS) and Depth First Search(DFS) – Classification of edges - tree, forward, back and cross edges – complexity and comparison

String matching problem: [3L]
Different techniques – Naive algorithm, string matching using finite automata, and Knuth, Morris, Pratt (KMP) algorithm with their complexities.

Amortized Analysis: [3L]
Aggregate, Accounting, and Potential Method.

Network Flow: [3L]
Ford Fulkerson algorithm, Max-Flow Min-Cut theorem (Statement and Illustration)

Matrix Manipulation Algorithm: [3L]
Strassen's matrix manipulation algorithm; application of matrix multiplication to solution of simultaneous linear equations using LUP decomposition, Inversion of matrix and Boolean matrix multiplication

Notion of NP-completeness: [3L]
P class, NP class, NP hard class, NP complete class – their interrelationship, Satisfiability problem, Cook's theorem (Statement only), Clique decision problem

Approximation Algorithms: [3L]
Necessity of approximation scheme, performance guarantee, polynomial time approximation schemes, vertex cover problem, travelling salesman problem.

Text Book:

7. T. H. Cormen, C. E. Leiserson, R. L. Rivest and C. Stein, "Introduction to Algorithms"

8. A. Aho, J.Hopcroft and J.Ullman "The Design and Analysis of Algorithms"

D.E.Knuth "The Art of Computer Programming", Vol. 3

Jon Kleiberg and Eva Tardos, "Algorithm Design" Reference:
K.Mehlhorn , "Data Structures and Algorithms" - Vol. I & Vol. 2.
S.Baase "Computer Algorithms"
E.Horowitz and Shani "Fundamentals of Computer Algorithms"
E.M.Reingold, J.Nievergelt and N.Deo- "Combinational Algorithms- Theory and Practice", Prentice Hall, 1997

Computer Architecture
Code: IT502
Contact: 3L + 1T
Credits: 4

Pre-requisite: Basic Electronics in First year, Introduction to Computing in second semester, Analog & Digital Electronics and Computer Organisation in Third semester.

Module – 1: [12 L]

Syllabus for B.Tech(Information Technology) Up to Fourth

Introduction: Review of basic computer architecture (Revisited), Quantitative techniques in computer design, measuring and reporting performance. (3L)
Pipelining: Basic concepts, instruction and arithmetic pipeline, data hazards, control hazards and structural hazards, techniques for handling hazards. Exception handling. Pipeline optimization techniques; Compiler techniques for improving performance. (9L)

Module – 2: [8L]
Hierarchical memory technology: Inclusion, Coherence and locality properties; Cache memory organizations, Techniques for reducing cache misses; Virtual memory organization, mapping and management techniques, memory replacement policies. (8L)

Module – 3: [6L]
Instruction-level parallelism: basic concepts, techniques for increasing ILP, superscalar, superpipelined and VLIW processor architectures. Array and vector processors. (6L)

Module – 4: [12 L]
Multiprocessor architecture: taxonomy of parallel architectures; Centralized shared- memory architecture: synchronization, memory consistency, interconnection networks. Distributed shared-memory architecture. Cluster computers. (8L)
Non von Neumann architectures: data flow computers, reduction computer architectures, systolic architectures. (4L)
Learning Outcome:
This course is a formidable prerequisite for the course Operating System to be offered in the subsequent semester.

Text books:
[To be detailed]

Operating System
Code: IT502 Contact:
3L Credits: 3

Introduction [4L]
Introduction to OS. Operating system functions, evaluation of O.S., Different types of O.S.: batch, multi-programmed, time-sharing, real-time, distributed, parallel.

System Structure[3L]
Computer system operation, I/O structure, storage structure, storage hierarchy, different types of protections, operating system structure (simple, layered, virtual machine), O/S services, system calls.

Process Management [17L]

Processes [3L]: Concept of processes, process scheduling, operations on processes, co-operating processes, inter- process communication.

Threads [2L]: overview, benefits of threads, user and kernel threads.

CPU scheduling [3L]: scheduling criteria, preemptive & non-preemptive scheduling, scheduling algorithms (FCFS, SJF, RR, priority), algorithm evaluation, multi-processor scheduling.

Process Synchronization [5L]: background, critical section problem, critical region, synchronization hardware, classical problems of synchronization, semaphores.
Deadlocks [4L]: system model, deadlock characterization, methods for handling deadlocks, deadlock prevention, deadlock avoidance, deadlock detection, recovery from deadlock.

Storage Management [19L]

Memory Management [5L]: background, logical vs. physical address space, swapping, contiguous memory allocation, paging, segmentation, segmentation with paging.

Virtual Memory [3L]: background, demand paging, performance, page replacement, page replacement algorithms (FCFS, LRU), allocation of frames, thrashing.

File Systems [4L]: file concept, access methods, directory structure, file system structure, allocation methods (contiguous, linked, indexed), free-space management (bit vector, linked list, grouping), directory implementation (linear list, hash table), efficiency & performance.

I/O Management [4L]: I/O hardware, polling, interrupts, DMA, application I/O interface (block and character devices, network devices, clocks and timers, blocking and nonblocking I/O), kernel I/O subsystem (scheduling, buffering, caching, spooling and device reservation, error handling), performance.

Disk Management [3L]: disk structure, disk scheduling (FCFS, SSTF, SCAN,C-SCAN) , disk reliability, disk formatting, boot block, bad blocks.

Protection & Security [4L]

Goals of protection, domain of protection, security problem, authentication, one time password, program threats, system threats, threat monitoring, encryption.

***Text Books / References* :**

1. Milenkovie M., "Operating System : Concept & Design", McGraw Hill.
2. Tanenbaum A.S., "Operating System Design & Implementation", Practice Hall NJ.
3. Silbersehatz A. and Peterson J. L., "Operating System Concepts", Wiley.
4. Dhamdhere: Operating System TMH
5. Stalling, William, "Operating Systems", Maxwell McMillan International Editions, 1992.
6. Dietel H. N., "An Introduction to Operating Systems", Addison Wesley.

Free Elective

Circuit Theory & Network
Code: IT504A
Contact: 3L+1T
Credits: 4

Module	Content	Hrs
1.	**a) *Resonant Circuits***: Series and Parallel resonance [1L], (*) ***Impedance and Admittance Characteristics, Quality Factor, Half Power Points, Bandwidth [2L], Phasor diagrams, Transform diagrams [1L], Practical resonant and series circuits, Solution of Problems [Tutorial - 1L]***. **b) Mesh Current Network Analysis**: Kirchoff's Voltage law, Formulation of mesh equations [1L], Solution of mesh equations by Cramer's rule and matrix method [2L], Driving point impedance, Transfer impedance [1L], Solution of problems with DC and AC sources [1L].	4 6
2.	**a) Node Voltage Network Analysis**: Kirchoff's Current law, Formulation of Node equations and solutions [2L], driving point admittance, transfer Admittance [1L], Solution of problems with DC and AC sources [1L]. **b) Network Theorems**: Definition and Implication of Superposition Theorem [1L], Thevenin's theorem, Norton's theorem [1L], Reciprocity theorem, Compensation theorem [1L], maximum Power Transfer theorem [1L], Millman's theorem, Star delta transformations [1L], Solutions and problems with DC and AC sources [1L].	4 6
3.	***Graph of Network***: Concept of Tree and Branch [1L], tree link, junctions, ***(*) Incident matrix, Tie set matrix [2L], Determination of loop current and node voltages [2L]***. **Coupled Circuits**: Magnetic coupling, polarity of coils, polarity of induced voltage, concept of Self and mutual inductance, Coefficient of coupling, Solution of Problems. **Circuit transients**: DC transients in R-L and R-C Circuits with and without initial charge, ***(*) R-L-C Circuits, AC Transients in sinusoidal R-L, R-C and R-L-C Circuits, Solution of Problems [2L].***	4 4 2
4.	**Laplace transform**: Concept of Complex frequency [1L], transform of f(t) into F(s) [1L], transform of step, exponential, over damped surge, critically damped surge, damped and un-damped sine functions [2L], properties of Laplace transform [1L], linearity, real differentiation, real integration, initial value theorem and final value theorem [1L], inverse Laplace transform [1L], application in circuit analysis, Partial fraction expansion, Heaviside's expansion theorem, Solution of problems [1L]. ***(*) Laplace transform and Inverse Laplace transform [2L]***. **Two Port Networks**: Relationship of Two port network variables, short circuit admittance parameters, open circuit impedance parameters, transmission parameters, relationship between parameter sets, network functions for ladder network and general network.	8 4

Old module 9 viz. SPICE deleted for consideration in Sessional Subject.

Problems for Module 1a:

Ex. 1. A parallel RLC Circuit has R= 100 K Ohms, L= 10 mH, C= 10 nF. Find resonant frequency, bandwidth and Quality factor.
Ex. 2. Two coils one of R= 0.51 Ohms,L= 32 mH, other of R= 1.3 Ohms, L= 15 mH, and two capacitors of 25 micro F and 62 micro F are in series with a resistance of 0.24 Ohms. Determine resonance frequency and Q of each coil.
Ex. 3. In a series circuit with R= 50 Ohms, l= 0.05 Ohms and C= 20 micro F, frequency of the source is varied till the voltage across the capacitor is maximum. If the applied voltage is 100 V, find the maximum voltage across the capacitor and the frequency

at which this occurs. Repeat the problem with R= 10 Ohms.

Syllabus for B.Tech(Information Technology) Up to Fourth

Problems for Module 1b and 2:
Examples for mesh current in networks like T, π, bridged T and combination of T and π.

See Annexure-1 for the figures

Problems for Module- 2a:
Ex.1. The network of Fig.1 – Mod.4 is in the zero state until t= 0when switch is closed. Find the current i1(t) in the resistor R3.
Hints: the Fig.1 – Mod.4 shows the same network in terms of transform impedance with the Thevenin equivalent network.
.
Ex.2. Find the Norton's equivalent circuit for the circuit Fig.2 – Mod.4.
Hints: As a 1st. step, short the terminals ab. This results in the Circuit of Fig.2.(a). By applying KCL at node a, we have, (0-24)/4+ isc = 0; i.e isc= 9 A. To find out the equivalent Norton's impedance RN, deactivate all the independent sources, resulting in a circuit of Fig.2.(b), RN= (4x12)/(4+12) = 3 Ohms. Thus we obtain Norton equivalent circuit of Fig.2 (c).

Problems for Module – 2b:
Ex.1. Draw the graph, one tree and its co tree for the circuit shown in Fig.1 – mod.5.
Hints: In the circuit there are four nodes (N= 4) and seven branches (B= 7). The graph is so drawn and appears as in Fig. 1 (a). Fig.1(b) shows one tree of graph shown in Fig. 1(a). The tree is made up of branches 2, 5 and 6. The co tree for the tree of Fig.1 (b) is shown in Fig. 1(c). The co tree has L= B-N+1 = 7-4+1 = 4 Links.
Ex.2. (a). For the circuit shown in Fig.2- Mod.5, construct a tree so that i1 is a link current. Assign a complete set of link currents and find i1 (t).
(b). Construct another tree in which v1 is a tree branch voltage. Assign a complete set of tree branch voltages and v1 (t). Take i(t) = 25 sin 1000t A, v(t)= 15 cos 1000t.

Tutorials: (*):Bold and Italics. Text

Books:

1. Valkenburg M. E. Van, "Network Analysis", Prentice Hall./Pearson Education
2. Hayt "Engg Circuit Analysis" 6/e Tata McGraw-Hill
3. D.A.Bell- Electrical Circuits- Oxford

Reference Books:

1. A.B.Carlson-Circuits- Cenage Learning
2. John Bird- Electrical Circuit Theory and Technology- 3/e- Elsevier (Indian Reprint)
3. Skilling H.H.: "Electrical Engineering Circuits", John Wiley & Sons.
4. Edminister J.A.: "Theory & Problems of Electric Circuits", McGraw-Hill Co.
5. Kuo F. F., "Network Analysis & Synthesis", John Wiley & Sons.
6. R.A.DeCarlo & P.M.Lin- Linear Circuit Analysis- Oxford
7. P.Ramesh Babu- Electrical Circuit Analysis- Scitech
8. Sudhakar: "Circuits & Networks:Analysis & Synthesis" 2/e TMH
9. M.S.Sukhija & T.K.NagSarkar- Circuits and Networks-Oxford
10. Sivandam- "Electric Circuits and Analysis", Vikas
11. V.K. Chandna, "A Text Book of Network Theory & Circuit Analysis",Cyber Tech
12. Reza F. M. and Seely S., "Modern Network Analysis", Mc.Graw Hill .
13. M. H. Rashid: "Introduction to PSpice using OrCAD for circuits and electronics", Pearson/PHI
14. Roy Choudhury D., "Networks and Systems", New Age International Publishers.
15. D.Chattopadhyay and P.C.Rakshit: "Electrical Circuits" New Age

Syllabus for B.Tech(Information Technology) Up to Fourth

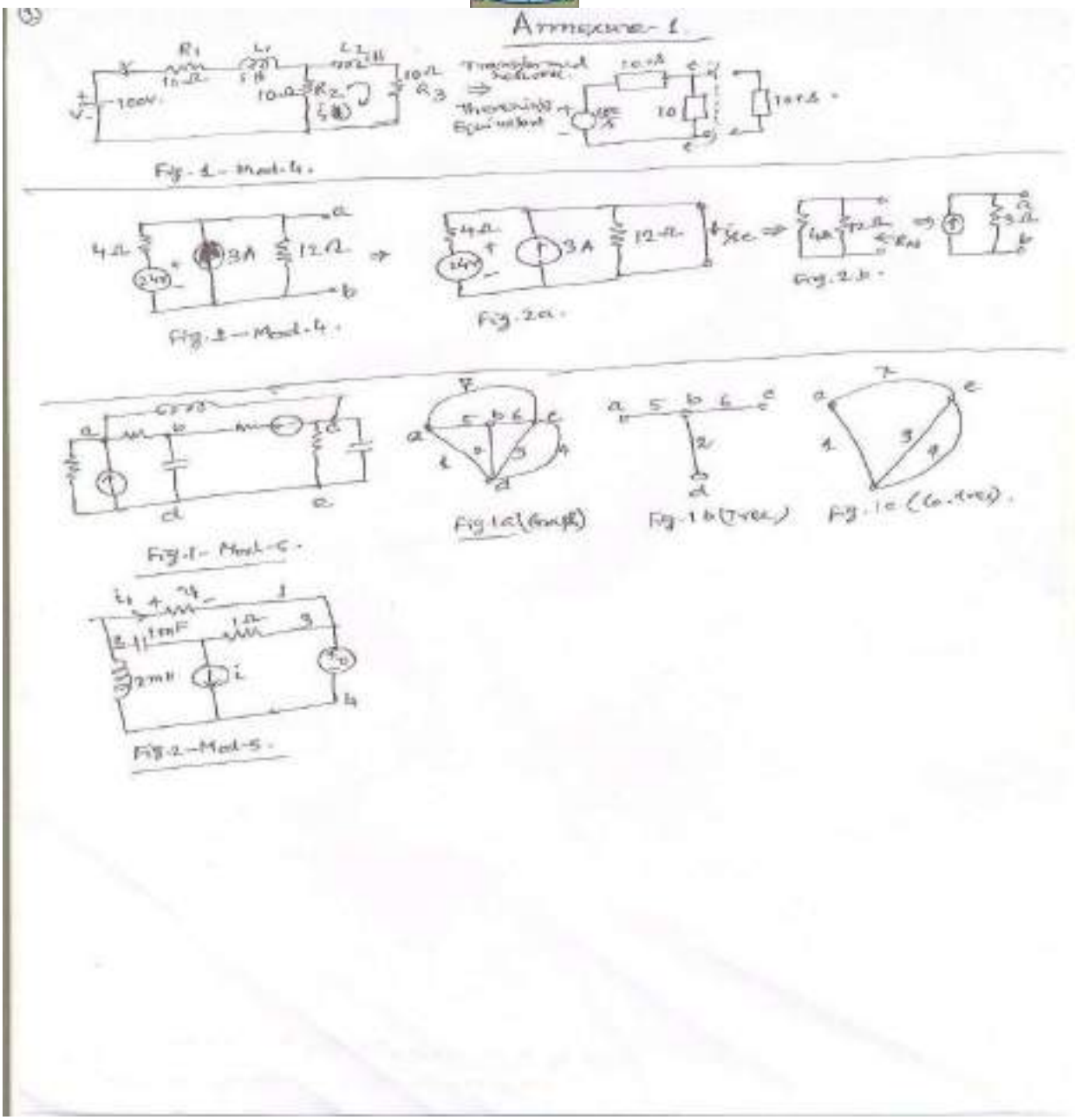

Data Communication
Code: IT504B
Contact: 3L + 1T
Credits: 4

Module I:
Data Communication Fundamentals: Layered Network Architecture; Mode of communication, topology, Data and Signal; Transmission Media: Guided, Unguided; Transmission Impairments and Channel Capacity; Transmission of Digital Data: Interfaces-DTE-DCE, MODEM, Cable MODEM; The telephone network system and DSL technology; **[10L]**
Module II:
Data Link Control: Interfacing to the media and synchronization; Error Control: Error Detection and Correction (Single bit, Multi

bit); Flow control: Stop-and-Wait ARQ, Go-Back-N ARQ, Selective-Repeat ARQ
Data Link Protocols: Synchronous, Asynchronous Protocols, Point-to-Point Protocol(PPP). **[12L]**

Module III:
Switching Communication Networks: Circuit switching; Packet switching; Routing in packet switched networks; X.25; Frame Relay; ATM, SONET. **[07L**]
Module IV:
Communication Network: Topology; Medium Access Control Techniques; IEEE CSMA/CD based LANs; IEEE Ring LANs; High Speed LANs – Token Ring Based(FDDI); High Speed LANs – CSMA/CD based; Wireless LANs: Bluetooth; **[07L]**
Network Security: Introduction to Cryptography; User Authentication; Firewalls. **[04L]**
References:
a) Data Communications and Networking, Behrouz A. Forouzan, TMH
b) Data and Computer Communications, William Stallings, PHI
c) Computer Networks, Andrew S. Tanenbaum, PHI

Digital Signal Processing
Code: IT504C
Contact: 3L + 1T
Credits: 4

MODULE – I: 9L
Discrete-time signals:
Concept of discrete-time signal, basic idea of sampling and reconstruction of signal, sampling theorem, sequences – periodic, energy, power, unit-sample, unit-step, unit-ramp, real & complex exponentials, arithmetic operations on sequences. 3L
LTI Systems:
Definition, representation, impulse response, derivation for the output sequence, concept of convolution, graphical, analytical and overlap-add methods to compute convolution supported with examples and exercises, properties of convolution, interconnections of LTI systems with physical interpretations, stability and causality conditions, recursive and non-recursive systems. 6L
MODULE –II: 11L
Z-Transform:
Definition, mapping between s-plane and z-plane, unit circle, convergence and ROC, properties of Z-transform, Z-transform on sequences with examples and exercises, characteristic families of signals along with ROCs, convolution, correlation and multiplication using Z-transform, initial value theorem, Perseval's relation, inverse Z-transform by contour integration, power series & partial-fraction expansions with examples and exercises. 6L
Discrete Fourier Transform:
Concept and relations for DFT/IDFT, Twiddle factors and their properties, computational burden on direct DFT, DFT/IDFT as linear transformations, DFT/IDFT matrices, computation of DFT/IDFT by matrix method, multiplication of DFTs, circular convolution, computation of circular convolution by graphical, DFT/IDFT and matrix methods, linear filtering using DFT, aliasing error, filtering of long data sequences – Overlap-Save and Overlap-Add methods with examples and exercises. 5L
Fast Fourier Transform:
Radix-2 algorithm, decimation-in-time, decimation-in-frequency algorithms, signal flow graphs, Butterflies, computations in one place, bit reversal, examples for DIT & DIF FFT Butterfly computations and exercises. 4L
MODULE – III: 5L
Filter Design:
Basic concepts of IIR and FIR filters, difference equations, design of Butterworth IIR analog filter using impulse invariant and bilinear transforms, design of linear phase FIR filters, no. of taps, rectangular, Hamming and Blackman windows. 5L
MODULE – IV: 7L
Digital Signal Processor:
Elementary idea about the architecture and important instruction sets of TMS320C 5416/6713 processor, writing of small programs in Assembly Language. 4L
FPGA:
Architecture, different sub-systems, design flow for DSP system design, mapping of DSP algorithms onto FPGA. 3L

TEXT BOOKS:
c) Digital Signal Processing – Principles, Algorithms and Applications, J.G.Proakis & D.G.Manolakis, Pearson Ed.
d) Digital Signal processing – A Computer Based Approach, S.K.Mitra, TMH Publishing Co.
e) Digital Signal Processing Signals, Systems and Filters, A. Antoniou, TMH Publishing Co.
f) VLSI Digital Signal Processing Systems Design and Implementation, Wiley International Publication.
g) Digital Signal Processing with Field Programmable Gate Arrays, U.Meyer-Baese, Springer.

REFERENCE BOOKS:

3. Digital Signal Processing, P. Rameshbabu, Scitech Publications (India).
4. Digital Signal Processing, S.Salivahanan, A.Vallabraj & C. Gnanapriya, TMH Publishing Co.
5. Digital Signal Processing; A Hands on Approach, C. Schuler & M.Chugani, TMH Publishing Co.
6. Digital Signal Processing, A. Nagoor Kani, TMH Education
7. Digital Signal Processing S. Poornachandra & B. Sasikala, MH Education
8. Digital Signal Processing; Spectral Computation and Filter Design Chi-Tsong Chen, Oxford University Press
9. Texas Instruments DSP Processor user manuals and application notes.
10. Digital Signal Processing – A practical Approach (second Edition) – Emmanuel C. Ifeacher & Barrie W. Jervis, Pearson Education
11. Xilinx FPGA user manuals and application notes.

Operation Research
Code: IT504D
Contact: 3L + 1T
Credits: 4

Module I

Linear Programming Problems (LPP):

Basic LPP and Applications; Various Components of LP Problem Formulation.

Solution of Linear Programming Problems:
Solution of LPP: Using Simultaneous Equations and Graphical Method;
Definitions: Feasible Solution, Basic and non-basic Variables, Basic Feasible Solution, Degenerate and Non-degenerate Solution, Convex set and explanation with examples. **5L**
Solution of LPP by Simplex Method; Charnes' Big-M Method; Duality Theory. Transportation Problems and Assignment Problems. **12L**

Module II

Network Analysis:
Shortest Path: Floyd Algorithm; Maximal Flow Problem (Ford-Fulkerson); PERT-CPM (Cost Analysis, Crashing, Resource Allocation excluded). **6L**

Inventory Control:
Introduction to EOQ Models of Deterministic and Probabilistic ; Safety Stock; Buffer Stock.

3L

Module III

Game Theory:
Introduction; 2-Person Zero-sum Game; Saddle Point; Mini-Max and Maxi-Min Theorems (statement only) and problems; Games without Saddle Point; Graphical Method; Principle of Dominance.

5L

Module IV

Queuing Theory:
Introduction; Basic Definitions and Notations; Axiomatic Derivation of the Arrival & Departure (Poisson Queue). Poisson Queue Models: (M/M/1): (∞ / FIFO) and (M/M/1: N / FIFO) and problems.

5L

Text Books:

1. H. A. Taha, "Operations Research", Pearson
2. P. M. Karak – "Linear Programming and Theory of Games", ABS Publishing House
3. Ghosh and Chakraborty, "Linear Programming and Theory of Games", Central Book Agency
4. Ravindran, Philips and Solberg - "Operations Research", WILEY INDIA

References:

1. Kanti Swaroop — "Operations Research", Sultan Chand & Sons
2. Rathindra P. Sen—"Operations Research: Algorithms and Applications", PHI
3. R. Panneerselvam - "Operations Research", PHI
4. A.M. Natarajan, P. Balasubramani and A. Tamilarasi - "Operations Research", Pearson
5. M. V. Durga Prasad – "Operations Research", CENGAGE Learning

6. J. K. Sharma - “Operations Research”, Macmillan Publishing Company

Syllabus for B.Tech(Information Technology) Up to Fourth

Microprocessors & Microcontrollers
Code: IT504E
Contact: 3L + 1T
Credits: 4

Module -1: **[8L]**
Introduction to Microcomputer based system. History of evolution of Microprocessor and Microcontrollers and their advantages and disadvantages. [1L]
Architecture of 8085 Microprocessor, Pin description of 8085. [2L]
Address/data bus Demultiplexing , Status Signals and the control signals. [1L] Instruction set of 8085 microprocessor, Addressing modes, [3L]
Timing diagram of the instructions (a few examples). [1L]

Module -2: **[9L]**
Assembly language programming with examples, Counter and Time Delays,
Stack and Subroutine, [6L]
Interrupts of 8085 processor(software and hardware), I/O Device Interfacing-I/O Mapped I/O and Memory Mapped I/O , Serial (using SID and SOD pins and RIM, SIM Instructions) and Parallel data transfer, [3L]

Module 3: **[10L]**
The 8086 microprocessor- Architecture, Addressing modes, Interrupts [3L]
Introduction to 8051 Microcontroller –Architecture, Pin Details. [3L]
Addressing modes, Instruction set, Examples of Simple Assembly Language. [4L]

Module -4: **[9L]**
Memory interfacing with 8085, 8086 [2L] Support IC chips- 8255 ,8251,8237/8257,8259 [4L] Interfacing of 8255 PPI with 8085 and Microcontroller 8051. [2L] Brief introduction to PIC microcontroller (16F877) [1L]

Learning Outcome:

Additional Tutorial Hours will be planned to meet the following learning outcome.

Through this course, the students will be exposed to hardware details of 8085 microprocessor with the related signals and their implications. They will also learn programming and interfacing of 8085. The students will understand the difference between the architecture of 8085 and 8086. They will also be aware of the 8051 architecture and its programming. Lastly the students will have a basic idea on PIC microcontroller (16F877)

TEXTS :
1. Microprocessors and microcontrollers - N. Senthil Kumar, M. Saravanan and Jeevananthan (Oxford university press)
2. 8051 Microcontroller – K. Ayala (Cengage learning)
3. MICROPROCESSOR architecture, programming and Application with 8085 - R.Gaonkar (Penram international Publishing LTD.)
4.Microcontrollers:Principles&Applications , Ajit Pal, PHI 2011.
5.Naresh Grover, "Microprocessor comprehensive studies Architecture, Programming and Interfacing"Dhanpat Rai, 2003
6. 8051 Microprocessor –V. Udayashankara and M.S Mallikarjunaswami (TMH).
7. Microprocessor 8085 and its Interfacing—S Mathur (PHI)
8. An Introduction to Microprocessor and Applications –Krishna Kant (Macmillan)
Reference:
1. 8086 Microprocessor –K Ayala (Cengage learning)
2. The 8085 Microprocessor, Architecture, Programming and Interfacing- K Uday Kumar, B .S Umashankar (Pearson)
3. The X-86 PC Assembly language, Design and Interfacing - Mazidi, Mazidi and Causey (PEARSON)
4. The 8051 microcontroller and Embedded systems - Mazidi, Mazidi and McKinley (PEARSON)
5. Microprocessors – The 8086/8088, 80186/80386/80486 and the Pentium family – N. B. Bahadure (PHI).
6. The 8051 microcontrollers – Uma Rao and Andhe Pallavi (PEARSON).

Programming Practices using C++
Code: IT504F
Contact: 3L + 1T

Syllabus for B.Tech(Information Technology) Up to Fourth

Credits: 4

Syllabus for B.Tech(Information Technology) Up to Fourth

Introduction [3L]
Programming paradigms,Language translator, **B**asics of OOP, Structure of C++ program, Class and object, Abstraction and encapsulation, Polymorphism, Inheritance, Static and dynamic binding.

Declaration, Expression and statements [4L]
Data types, Variables, Constants, Operator and expression, Operator precedence and associativity. Statements: Labelled, Expression, Compound, Control, Jump, Declaration, Try-throw-catch.

Array, pointer and function [4L]
Array,Addresses, Pointer. Function: Declaration, Definition and call, Inline function, Main function argument, Reference variable, Function overloading, Default argument, Parameter passing, Recursion, Scope of variable, Return-by-value and Return-by-reference, Pointer to function

Data abstraction through classes and user defined data types [6L]
Class, Members, Constructor and destructor, Copy constructor.
Dynamic memory management: Operators new and delete, Malloc and free, Static member, Scope of class names, Scope of variables.

Operator Overloading [5L]
Overloading unary and binary operator, Overloaded function calls, Subscripting, class member access, Non-member operator, New and delete, Cast operator.

Class relationships [6L]
Introduction, Polymorphism, Coercion, Overloading, Parametric and inclusion polymorphism
Inheritance: direct and indirect superclasses, Multiple inheritance, Virtual base class,Friend, Virtual function, Abstract class, Overriding and hiding, Dynamic binding of functions, Virtual destructor and operators.

Template and Exception Handling [5L]
Class template, Member function inclusion, Function template, Specialization,Inheritance, Namespace.
Concept of exception handling, Catch block, Nested try-catch block, Condition expression in throw expression, Constructor & destructor, Runtime standard exception

Standard Library in C++ [3L]
Standard library function, Input and output, Iostream class hierarchy, Class ios, Other stream classes.

Object oriented design and modelling [4L]
Software development, Qualities of software system, Software architecture, Process life cycle, phases, Modularity, OO methodology, Modeling, UML overview, Object oriented design patterns.

Textbooks/References:

1. Schildt, H., The Complete Reference C++, McGraw – Hill.
2. C++ object oriented programming paradigm, Debasish Jana, PHI
3. Pooley, R and P. Stevens, Using UML , Addison-Wesley.
4. Programming In C++, Y.I. Shah and M.H. Thaker, ISTE/EXCEL BOOKS
5. Rambaugh, James Michael, Blaha – "Object Oriented Modelling and Design" – Prentice Hall, India
6. Rajaram: Object Oriented Programming and C++, New Age International

Practical

Design & Analysis Algorithm Lab
Code: IT591
Contact: 3P
Credits: 2

Programming Language used :C Lab
:1 : Divide and Conquer :

> Implement Binary Search using Divide and Conquer approach
> Implement Merge Sort using Divide and Conquer approach

Lab :2 : Divide and Conquer :

> Implement Quick Sort using Divide and Conquer approach
> Find Maximum and Minimum element from a array of integer using Divide and Conquer approach

Syllabus for B.Tech(Information Technology) Up to Fourth

Lab :3 : Dynamic Programming :
> Find the minimum number of scalar multiplication needed for chain of matrix

Lab :4 : Dynamic Programming :
>Implement all pair of Shortest path for a graph (Floyed- Warshall Algorithm)

>Implement Traveling Salesman Problem

Lab :5 : Dynamic Programming :
>Implement Single Source shortest Path for a graph (Dijkstra , Bellman Ford Algorithm)

Lab :6 : Brunch and Bound :
>Implement 15 Puzzle Problem

Lab :7 : Backtracking :
>Implement 8 Queen problem

Lab :8 : Backtracking (implement any one of the following problem):
>Graph Coloring Problem
>Hamiltonian Problem

Lab :9 : Greedy method(implement any one of the following problem) :
>Knapsack Problem
>Job sequencing with deadlines

Lab :10 : Greedy method (implement any one of the following problem) :
>Minimum Cost Spanning Tree by Prim's Algorithm
>Minimum Cost Spanning Tree by Kruskal's Algorithm

Lab :11 : Graph Traversal Algorithm :
>Implement Breadth First Search (BFS)
>Implement Depth First Search (DFS)

Computer Architecture Lab
Code: IT592
Contact: 3P
Credits: 2
All laboratory assignments are based on Hardware Description Language (VHDL or Verilog) Simulation.
[Pre-requisite: The hardware based design has been done in the Analog & Digital Electronics laboratory and Computer Organisation laboratory]
HDL introduction
Basic digital logic base programming with HDL 8-
bit Addition, Multiplication, Division
8-bit Register design
Memory unit design and perform memory operatons. 8-
bit simple ALU design
8-bit simple CPU design Interfacing
of CPU and Memory

Operating System Lab
Code: IT593
Contact: 3P
Credits: 2

1. Managing Unix/Linux Operating System [8P]:
Creating a bash shell script, making a script executable, shell syntax (variables, conditions, control structures, functions, commands). Partitions, Swap space, Device files, Raw and Block files, Formatting disks, Making file systems, Superblock, I-nodes, File system checker, Mounting file systems, Logical Volumes, Network File systems, Backup schedules and methods Kernel loading, init and the inittab file, Run-levels, Run level scripts. Password file management, Password security, Shadow file, Groups and the group file, Shells, restricted shells, user-management commands, homes and permissions, default files, profiles, locking accounts, setting passwords, Switching user, Switching group, Removing users & user groups.

2. **Process [4P]**: starting new process, replacing a process image, duplicating a process image, waiting for a process, zombie process.

3. **Signal [4P]**: signal handling, sending signals, signal interface, signal sets.

4. **Semaphore [6P]**: programming with semaphores (use functions semctl, semget, semop, set_semvalue,

del_semvalue, semaphore_p, semaphore_v).

5. **POSIX Threads [6P]**: programming with pthread functions (viz. pthread_create, pthread_join, pthread_exit, pthread_attr_init, pthread_cancel)

6. **Inter-process communication [6P]**: pipes(use functions pipe, popen, pclose), named pipes(FIFOs, accessing FIFO), message passing & shared memory(IPC version V).

Circuits and Networks Lab
Code: IT594A
Contacts: 3P
Credits: 2

14. Characteristics of Series & Parallel Resonant circuits
15. Verification of Network Theorems
16. Transient Response in R-L & R-C Networks ; simulation / hardware
17. Transient Response in RLC Series & Parallel Circuits & Networks ; simulation / hardware
18. Determination of Impedance (Z), and Admittance (Y) parameters of Two-port networks
19. Generation of periodic, exponential, sinusoidal, damped sinusoidal, step, impulse, and ramp signals using MATLAB
20. Representation of Poles and Zeros in s-plane, determination of partial fraction expansion in s-domain and cascade connection of second-order systems using MATLAB
21. Determination of Laplace Transform, different time domain functions, and Inverse Laplace
22. Transformation using MATLAB

Note: An Institution / college may opt for some other hardware or software simulation wherever possible in place of MATLAB

Data Communication Lab
Code:IT594B
Contact: 3P
Credits: 2

List of Experiments

1. To study different types of transmission media
2. Familiarization with Networking cables (CAT5, UTP), Connectors (RJ45, T-connector), Hubs, Switches. Configuration of a HUB/Switch.
3. PC-to-PC Communication with the Data Communication Trainers for File
   Transfer.
   Error detection codes, Data Encryption etc.
4. Experiments using LAN Trainer kit for Point-to-
   Point Communication
   Multicast/Broadcast Communication
   Data Encryption and security protocols
5. To make inter-connections in cables for data communication in LAN and install LAN using (a) Tree topology (b) STAR topology (c) Bus topology (d) Token-Ring topology
6. Study of MODEMs: (a) configure the modem of a computer (b) Study Serial Interface RS-232 and its applications (c) Study the Parallel Interface and its applications

DSP Lab Code:
IT594C
Contact: 3P
Credits: 2
3.
Simulation Laboratory using standard Simulator:

11. Sampled sinusoidal signal, various sequences and different arithmetic operations.
12. Convolution of two sequences using graphical methods and using commands- verification of the properties of convolution.
13. Z-transform of various sequences – verification of the properties of Z-transform.
14. Twiddle factors – verification of the properties.
15. DFTs / IDFTs using matrix multiplication and also using commands.
16. Circular convolution of two sequences using graphical methods and using commands, differentiation between linear and circular convolutions.
17. Verifications of the different algorithms associated with filtering of long data sequences and Overlap –add and Overlap-save methods.

18. Butterworth filter design with different set of parameters.
19. FIR filter design using rectangular, Hamming and Blackman windows.

Hardware Laboratory using either 5416 or 6713 Processor and Xilinx FPGA:

13. Writing & execution of small programs related to arithmetic operations and convolution using Assembly Language of TMS320C 5416/6713 Processor, study of MAC instruction.
14. Writing of small programs in VHDL and downloading onto Xilinx FPGA.
15. **Mapping of some DSP algorithms onto FPGA. OR**

Lab
Code: IT594D
Contact: 3P
Credits: 2

Software based lab using C /C++

1. Assignment on Tranportation problem.

2. Assignment on Assignment problem

3. Assignment on Duality

4. Assignment on Simplex method (Including Charns' Big-M Method)

5. Assignment on Shortest Path by using Dijkstra's or Floyd's Algorithm

6. Assignment on Maximal Flow Problem (Ford-Fulkerson Method).

7. Assignment on PERT/CPM

8. Familiarization with O.R package: TORA

Microprocessor & Microcontroller Lab
Code: IT594E
Contact: 3P
Credits: 2

Sl. No.	Experiment Name	No of Hours
1	Study of Prewritten programs on 8085 trainer kit using the basic instruction set (data transfer, Load/Store, Arithmetic, Logical). **Or,** Familiarization with 8085 simulator on PC. Programs using basic instruction set (data transfer, Load/Store, Arithmetic, Logical) on the simulator.	**3**
2	**Programming using kit or Simulator for:** 1. Table look up 2. Copying a block of memory 3. Shifting a block of memory iv) Packing and unpacking of BCD numbers 4. Addition of BCD numbers 5. Binary to ASCII conversion and vice-versa (Using Subroutine Call) 6. BCD to Binary Conversion and vice-versa vii) String Matching, Multiplication	**18**
3	Program using IN/OUT instructions and 8255 PPI on the trainer kit e.g. subroutine for delay, 1. Glowing all the LEDs one by one with particular delay 2. Reading switch state and glowing LEDs accordingly.	**3**
4	Serial communication between two trainer kits	**3**
5	Study of Prewritten programs on 8051 Microcontroller Kit using the basic instruction set (data transfer, Load/Store, Arithmetic, Logical). **Or,** Familiarization with 8051 Simulator on PC. Study of prewritten programs using basic instruction set (data transfer, Load/Store, Arithmetic, Logical).	**3**
	Total 30 hours (10 classes each of 3 periods)	

Programming Practices using C++

Syllabus for B.Tech(Information Technology) Up to Fourth

Code: IT594F
Contact: 3P

Syllabus for B.Tech(Information Technology) Up to Fourth

Credits: 2
Introduction of UNIX/Linux Operating System which includes preliminary commands, start-up & shutdown methodology, file handling as well as introduction to editors like Vi editor, introduction to GNU C & C++ compiler, as well as introduction to GNU & GDB script. **[4P]**

Introduction to C++, basic loop control, executing programs, writing functions, selection statements, review of functions and parameters, command line arguments, recursion, I/O streams, arrays and string manipulation, pointers, structures & unions**. [6P]**

Object-Oriented Programming in C++, fundamentals of classes, constructors-destructors. Dealing with member functions, operator overloading and polymorphism (both static & dynamic). **[6P]**

Dealing with inheritance, derived class handling, abstract class, virtual class, overriding, template class, name-space & exception handling. **[4P]**

Dynamic memory allocation, implementation of Linked Lists, using C++. **[4P]**

Note: GNU C++ can be used for the programming, since it is free and has no licensing anomaly

SEMESTER – VI

Detailed syllabus further defining learning outcome as per discussion in the workshop held on 9.7.2012 will be uploaded shortly.

Theory

Principles of Management
HU-601
Contracts: 2L
Credits- 2

Module-I

1. Basic concepts of management: Definition – Essence, Functions, Roles, Level.
2. Functions of Management: Planning – Concept, Nature, Types, Analysis, Management by objectives; Organisation Structure – Concept, Structure, Principles, Centralization, Decentralization, Span of Management; Organisational Effectiveness.

Module-II

3. Management and Society – Concept, External Environment, CSR, Corporate Governance, Ethical Standards.
4. People Management – Overview, Job design, Recruitment & Selection, Training & Development, Stress Management.
5. Managerial Competencies – Communication, Motivation, Team Effectiveness, Conflict Management, Creativity, Entrepreneurship.

Module-III

6. Leadership: Concept, Nature, Styles.
7. Decision making: Concept, Nature, Process, Tools & techniques.
8. Economic, Financial & Quantitative Analysis – Production, Markets, National Income Accounting, Financial Function & Goals, Financial Statement & Ratio Analysis, Quantitative Methods – Statistical Interference, Forecasting, Regression Analysis, Statistical Quality Control.

Module-IV

9. Customer Management – Market Planning & Research, Marketing Mix, Advertising & Brand Management.
10. Operations & Technology Management – Production & Operations Management, Logistics & Supply Chain Management, TQM, Kaizen & Six Sigma, MIS.

Readings:

1. Management: Principles, Processes & Practices – Bhat, A & Kumar, A (OUP).
2. Essentials for Management – Koontz, Revised edition, Tata McGraw Hill (TMH)
3. Management – Stoner, James A. F. (Pearson)

4.Management - Ghuman, Tata McGraw Hill(TMH)

Syllabus for B.Tech(Information Technology) Up to Fourth

Database Management System IT-601
Contracts: 3L
Credits- 3

Introduction [4L]
Concept & Overview of DBMS, Data Models, Database Languages, Database Administrator, Database Users, Three Schema architecture of DBMS.

Entity-Relationship Model [6L]
Basic concepts, Design Issues, Mapping Constraints, Keys, Entity-Relationship Diagram, Weak Entity Sets, Extended E-R features.

Relational Model [5L]
Structure of relational Databases, Relational Algebra, Relational Calculus, Extended Relational Algebra Operations, Views, Modifications Of the Database.

SQL and Integrity Constraints [8L]
Concept of DDL, DML, DCL. Basic Structure, Set operations, Aggregate Functions, Null Values, Domain Constraints, Referential Integrity Constraints, assertions, views, Nested Subqueries, Database security application development using SQL, Stored procedures and triggers.

Relational Database Design [9L]
Functional Dependency, Different anamolies in designing a Database., Normalization using funtional dependencies, Decomposition, Boyce-Codd Normal Form, 3NF, Nomalization using multi-valued depedencies, 4NF, 5NF

Internals of RDBMS [7L]
Physical data structures, Query optimization : join algorithm, statistics and cost bas optimization. Transaction processing, Concurrency control and Recovery Management : transaction model properties, state serializability, lock base protocols, two phase locking.

File Organization & Index Structures [6L]
File & Record Concept, Placing file records on Disk, Fixed and Variable sized Records, Types of Single-Level Index (primary, secondary, clustering), Multilevel Indexes, Dynamic Multilevel Indexes using B tree and B+ tree .

Text Books:

1. Henry F. Korth and Silberschatz Abraham, “Database System Concepts”, Mc.Graw Hill.
2. Elmasri Ramez and Novathe Shamkant, “Fundamentals of Database Systems”, Benjamin Cummings Publishing. Company.
3. Ramakrishnan: Database Management System , McGraw-Hill
4. Gray Jim and Reuter Address, “Transaction Processing : Concepts and Techniques”, Moragan Kauffman Publishers.
5. Jain: Advanced Database Management System CyberTech
6. Date C. J., “Introduction to Database Management”, Vol. I, II, III, Addison Wesley.
7. Ullman JD., “Principles of Database Systems”, Galgottia Publication.

Reference:

1. James Martin, “Principles of Database Management Systems”, 1985, Prentice Hall of India, New Delhi
2. “Fundamentals of Database Systems”, Ramez Elmasri, Shamkant B.Navathe, Addison Wesley Publishing Edition
3. “Database Management Systems”, Arun K.Majumdar, Pritimay Bhattacharya, Tata McGraw Hill

Computer Networking IT-602
Contracts: 3L
Credits- 3

Module I
Overview of Data Communication and Networking: [4L]
Introduction; Data communications: components, data representation (ASCII,ISO etc.), direction of data flow (simplex, half duplex, full duplex); network criteria, physical structure (type of connection, topology), categories of network (LAN, MAN,WAN); Internet: brief history, Protocols and standards; Reference models: OSI reference model, TCP/IP reference model, their comparative study.
Physical Level: [6L]

Syllabus for B.Tech(Information Technology) Up to Fourth

Overview of data(analog & digital), signal(analog & digital), transmission (analog & digital) & transmission media (guided & unguided); Circuit switching: time division & space division switch, TDM bus; Telephone Network;

Module II

Data link Layer: [5L]

Types of errors, framing(character and bit stuffing), error detection & correction methods; Flow control; Protocols: Stop & wait ARQ, Go-Back- N ARQ, Selective repeat ARQ, HDLC;

Medium Access sub layer: [5L]

Point to Point Protocol, LCP, NCP, Token Ring; Reservation, Polling, Multiple access protocols: Pure ALOHA, Slotted ALOHA, CSMA, CSMA/CD, CSMA/CA Traditional Ethernet, fast Ethernet(in brief);

Module III Network layer: [8L]

Internetworking & devices: Repeaters, Hubs, Bridges, Switches, Router, Gateway; Addressing : IP addressing, subnetting; Routing : techniques, static vs. dynamic routing , Unicast Routing Protocols: RIP, OSPF, BGP; Other Procols: ARP, IP, ICMP, IPV6;.

Transport layer: [4L]

Process to Process delivery; UDP; TCP; Congestion Control: Open Loop, Closed Loop choke packets; Quality of service: techniques to improve QoS: Leaky bucket algorithm, Token bucket algorithm,

Module IV Application Layer [5L]

Introduction to DNS, SMTP, SNMP, FTP, HTTP & WWW; Security: Cryptography (Public, Private Key based), Digital Signature, Firewalls.

Modern topics: [5L]

ISDN services & ATM, DSL technology, Cable Modem: Architecture & Operation in brief
Wireless LAN: IEEE 802.11, Introduction to blue-tooth.

Text Books:

1. B. A. Forouzan – "Data Communications and Networking (3rd Ed.) " – TMH
2. A. S. Tanenbaum – "Computer Networks (4th Ed.)" – Pearson Education/PHI
3. W. Stallings – "Data and Computer Communications (5th Ed.)" – PHI/ Pearson Education
4. Zheng & Akhtar, Network for Computer Scientists & Engineers, OUP
5. Black, Data & Computer Communication, PHI
6. Miller, data Communication & Network, Vikas
7. Miller, Digital & Data Communication, Jaico
8. Shay, Understanding Data Communication & Network, Vikas

Reference Books:

1. Kurose and Rose – " Computer Networking -A top down approach featuring the internet" – Pearson Education
2. Leon, Garica, Widjaja – "Communication Networks" – TMH
3. Walrand – "Communication Networks" – TMH.
4. Comer – "Internetworking with TCP/IP, vol. 1, 2, 3(4th Ed.)" – Pearson Education/PHI

Software Engineering IT-603
Contracts: 3L
Credits- 3

Overview of System Analysis & Design , Business System Concept, System Development Life Cycle, Waterfall Model , Spiral Model, Feasibility Analysis, Technical Feasibility, Cost- Benefit Analysis, COCOMO model. **[10L]**

Module II

System Design – Context diagram and DFD, Problem Partitioning, Top-Down And Bottom-Up design; Decision tree, decision table and structured English; Functional vs. Object- Oriented approach. **[5L]**

Module III

Coding & Documentation – Structured Programming, OO Programming, Information Hiding, Reuse, System Documentation. **[4L]**

Testing – Levels of Testing, Integration Testing, Test case Specification, Reliability Assessment, Validation & Verification Metrics, Monitoring & Control. **[8L]**

Module IV

Software Project Management – Project Scheduling, Staffing, Software Configuration Management, Quality Assurance, Project Monitoring. **[7L]**

Module V

Fundamentals of Object Oriented design in UML

Static and dynamic models, why modeling, UML diagrams: Class diagram, interaction diagram: collaboration diagram, sequence diagram, state chart diagram, activity diagram, implementation diagram. **[10 L]**

Some Justifications about the changes made in the above syllabus

Note:

Syllabus for B.Tech(Information Technology) Up to Fourth

1. "UML extensibility- model constraints and comments, Note, Stereotype" is omitted to fit the syllabus in 10L.
2. There are 44 lectures in the current syllabus and the proposed syllabus is also spans 44 lectures.
3. To my opinion, "Coding & Documentation – Structured Programming, OO Programming, Information Hiding, Reuse, System Documentation. **[4L]**" from **Module III** may be removed and then total lectures get reduced to 40.

Professional Elective

Information Theory & Coding IT-604A
Contracts: 3L
Credits- 3

Source Coding [7L]
Uncertainty and information, average mutual information and entropy, information measures for continuous random variables, source coding theorem, Huffman codes.

Channel Capacity And Coding [7L]
Channel models, channel capacity, channel coding, information capacity theorem, The Shannon limit.

Linear And Block Codes For Error Correction [8L]
Matrix description of linear block codes, equivalent codes, parity check matrix, decoding of a linear block code, perfect codes, Hamming codes.

Cyclic Codes [7L]
Polynomials, division algorithm for polynomials, a method for generating cyclic codes, matrix description of cyclic codes, Golay codes.

BCH Codes [8L]
Primitive elements, minimal polynomials, generator polynomials in terms of minimal polynomials, examples of BCH codes.

Convolutional Codes [8L]
Tree codes, trellis codes, polynomial description of convolutional codes, distance notions for convolutional codes, the generating function, matrix representation of convolutional codes, decoding of convolutional codes, distance and performance bounds for convolutional codes, examples of convolutional codes, Turbo codes, Turbo decoding.

Books

1. Information theory, coding and cryptography - Ranjan Bose; TMH.
2. Information and Coding - N Abramson; McGraw Hill.
3. Introduction to Information Theory - M Mansurpur; McGraw Hill.
4. Information Theory - R B Ash; Prentice Hall.
5. Error Control Coding - Shu Lin and D J Costello Jr; Prentice Hall.

Computer Graphics IT-604B
Contracts: 3L
Credits- 3 Module I:
Introduction to computer graphics & graphics systems [6L]: Overview of computer graphics, representing pictures, preparing, presenting & interacting with pictures for presentations; Visualization & image processing; RGB color model, direct coding, lookup table; storage tube graphics display, Raster scan display, 3D viewing devices, Plotters, printers, digitizers, Light pens etc.; Active & Passive graphics devices; Computer graphics software.

Scan conversion [8L]: Points & lines, Line drawing algorithms; DDA algorithm, Bresenham's line algorithm, Circle generation algorithm; Ellipse generating algorithm; scan line polygon, fill algorithm, boundary fill algorithm, flood fill algorithm.

Module II:

2D transformation & viewing [15L]: Basic transformations: translation, rotation, scaling; Matrix representations & homogeneous coordinates, transformations between coordinate systems; reflection shear; Transformation of points, lines, parallel lines, intersecting lines. Viewing pipeline, Window to view port co-ordinate transformation, clipping operations, point clipping, line clipping, clipping

circles, polygons & ellipse. Cohen and Sutherland line clipping,

Sutherland-Hodgeman Polygon clipping, Cyrus-beck clipping method

3D transformation & viewing [5L]: 3D transformations: translation, rotation, scaling & other transformations. Rotation about an arbitrary axis in space, reflection through an arbitrary plane; general parallel projection transformation; clipping, view port clipping, 3D viewing.

Module III:

Curves [3L]: Curve representation, surfaces, designs, Bezier curves, B-spline curves, end conditions for periodic B-spline curves, rational B-spline curves.

Hidden surfaces [3L]: Depth comparison, Z-buffer algorithm, Back face detection, BSP tree method, the Painter's algorithm, scan-line algorithm; Hidden line elimination, wire frame methods , fractal - geometry.
Color & shading models [2L]: Light & color model; interpolative shading model; Texture.
Introduction to Ray-tracing: [3L]
Human vision and color, Lighting, Reflection and transmission models.

Books:
1. Hearn, Baker – "Computer Graphics (C version 2nd Ed.)" – Pearson education
2. Z. Xiang, R. Plastock – " Schaum's outlines Computer Graphics (2nd Ed.)" – TMH
3. D. F. Rogers, J. A. Adams – "Mathematical Elements for Computer Graphics (2nd Ed.)" – TMH

Pattern Recognition(Updated-24.01.13) IT-604C
Contracts: 3L
Credits- 3

1. Basics of pattern recognition — 2L
2. Bayesian decision theory — 8L
Classifiers, Discriminant functions, Decision surfaces
Normal density and discriminant functions
Discrete features
3. Parameter estimation methods — 6L
Maximum-Likelihood estimation
Gaussian mixture models
Expectation-maximization method
Bayesian estimation
4. Hidden Markov models for sequential pattern classification — 8L
Discrete hidden Markov models
Continuous density hidden Markov models
5. Dimension reduction methods — 3L
Fisher discriminant analysis
Principal component analysis
Parzen-window method
K-Nearest Neighbour method
6. Non-parametric techniques for density estimation — 2L
7. Linear discriminant function based classifier — 5L
Perceptron
Support vector machines
8. Non-metric methods for pattern classification — 4L
Non-numeric data or nominal data
Decision trees
9. Unsupervised learning and clustering — 2L
Criterion functions for clustering
Algorithms for clustering: K-means, Hierarchical and other methods

Total: 40L

Text Books:
1. R. O. Duda, P. E. Hart and D. G. Stork: Pattern Classification, John Wiley, 2001.
2. S. Theodoridis and K. Koutroumbas, Pattern Recognition, 4th Ed., Academic Press, 2009.
3. C. M. Bishop, Pattern Recognition and Machine Learning, Springer, 2006.

Syllabus for B.Tech(Information Technology) Up to Fourth

ERP
IT-604D
Contracts: 3L
Credits- 3

Module 1: Overview of ERP (Lectures : 9)

1. **The evolution of ERP systems: A historical perspective**
   Evolution through Payroll system, Inventory Control system, Materials Requirement Planning (MRP I) system, Manufacturing Resource Planning (MRP II) system, Their advantages and disadvantages. Definition and Concept of ERP, Business reasons for rise and popularity of ERP system - Benefits of an ERP system

2. **Business processes supported by ERP systems**
   Various business functions in an Organization – Purchasing, Materials Management, Manufacturing, Sales & Distribution, Plant Maintenance, Quality Management, Finance & Accounting including Costing, Human Resources etc.

   ERP market place – SAP, Oracle, PeopleSoft, JD Edwards, Baan, Microsoft's suit of products etc.
   Business modules in these ERP packages – a brief comparative description of business function modules and sub-modules.

   Overview of key end-to-end business processes supported in two major ERP systems (preferably SAP and Oracle) – Order to Cash, Procure to Pay, Plan to Produce and Despatch.

Module 2 : Information Technology and ERP systems (Lectures : 9)

1. **The evolution of Information Technology (IT): A historical perspective**
   Evolution of computer generations (hardware and software) – Operating systems, File systems to Database Management systems, Communication Networks. Enabling of ERP systems by IT evolution.

2. **The evolution of ERP systems architecture**
   Client-Server based architecture, Multi-Tier architecture – Presentation layer, Application layer, and Database layer (On-line Transaction Processing – OLTP). Brief discussion on Extended ERP systems - Web-enabled ERP architecture, Service-Oriented Architecture and Cloud Computing. Open Source ERP.

3. **Related technology concepts**
   ERP and Supply Chain Management (SCM), and Customer Relationship Management (CRM), ERP and Business Intelligence (some of the popular tools like Cognos, Business Objects should be mentioned), ERP and Data warehousing (Data Mart, Data Mining and On-line Analytical Processing - OLAP), ERP and E-business.

Module 3 : Implementation of ERP system (Lectures : 11)
Types of services required in implementation – Consulting, Configuration, Customization and Support

1. **ERP implementation approach**
   Single vendor versus Best-of Breed ERP implementation, Big Bang versus
   Phased (by module/ site) implementation, Using ERP of Application Service Provider (ASP).

2. ERP implementation life cycle

Planning different aspects (Economic viability, Senior Management commitment, Resource requirements, Change management etc.), Understanding requirements and Process preparation – Gap analysis and Business Process Engineering, User Acceptance criteria, Design, Configuration, Customization (difference between Configuration and Customization, advantages and disadvantages), Extensions, Data migration, End-user training, User Acceptance, Going live, Roll-out. Differences between ERP implementation life cycle and Custom Software development phases. Drawbacks of ERP system.

3. **Organizing implementation**

Interaction with Vendors, Consultants, and Users. Contracts with Vendors, Consultants, and Employees. Project Management and Monitoring. ERP Project Organization
– Formation of Steering Committee and different User Groups. Top Management Commitment and Steering Committee meetings. Change Management, Risks and Challenges in ERP implementation.

4. **Post-implementation Support, Review, Maintenance and Security of ERP systems**

A typical Support Cycle (Planning, Stabilization, Ongoing and Upgrade phases). Post-implementation Review of ERP systems – measures of review (Efficiency, Effectiveness, and Competitive Advantage), and approaches for review (User attitude survey, Cost/benefit analysis, Compliance audit, Budget performance review, Service level monitoring, Technical review, Product review, Integration review etc.). System maintenance and ERP system maintenance. Software upgrade (patch, release, version). Security and Access control of ERP systems.

Module 4 : Emerging Trends and Future of ERP systems (Lectures : 7)

1. **Emerging Technologies and ERP**

Service-oriented Architecture (SOA): Enterprise SOA layers – Business processes, Business services, Components and Integration services, Advantages and Drawbacks of SOA, When to use SOA, Difference between multi-layered Client-server architecture and SOA, basic awareness of NetWeaver from SAP, Websphere from Oracle and .Net from Microsoft.
Enterprise Application Integration (EAI): Basic understanding of the concept, Types of EAI (levels) – User Interface, Method (logic), Application Interface, Data.
EAI architecture – Typical framework (Business Processes, Components &Services, Messaging service, and Transport service. Mention of some of the leading EAI vendors – IBM, Microsoft, Oracle, SAP, TIBCO. *Radio Frequency Identification (RFID) and ERP*: awareness of RFID technology, Benefits of RFID integrated with ERPs.
M-Commerce: basic concept and applications, difference with E-Commerce, benefits of integration with ERPs.

2. **Future of ERP**

Technology transformation to SOA, more E-Commerce features, Growing mobile applications, Economical and Easy models of ERP deployment etc.

Books Recommended:

1. Enterprise Resource Planning – A Managerial Perspective by D P Goyal, Tata McGraw Hill Education, 2011
2. Enterprise Resource Planning by Ashim Raj Singla, Cengage Learning, 2008

Syllabus for B.Tech(Information Technology) Up to Fourth

References:

1. Enterprise Resource Planning, 2nd Edition by Alexis Leon, Tata McGraw Hill Education, 2008

Discrete Mathematics IT-605A
Contracts: 3L Credits- 3

Free Elective

Module I:

Introduction to Propositional Calculus: Propositions, Logical Connectives, Conjunction, Disjunction, Negation and their truth table. Conditional Connectives, Implication, Converse, Contrapositive, Inverse, Biconditional statements with truth table, Logical Equivalence, Tautology, Normal forms-CNF, DNF; Predicates and Logical Quantifications of propositions and related examples.

10L

Module II:

Theory of Numbers: Well Ordering Principle, Divisibility theory and properties of divisibility; Fundamental theorem of Arithmetic; Euclidean Algorithm for finding G.C.D and some basic properties of G.C.D with simple examples;

Congruences, Residue classes of integer modulo n (Z_n) and its examples.

Order, Relation and Lattices: POSET, Hasse Diagram, Minimal , Maximal, Greatest and Least elements in a POSET, Lattices and its properties, Principle of Duality, Distributive and Complemented Lattices.

10L

Module III:

Counting Techniques: Permutations, Combinations, Binomial coefficients, Pigeon- hole Principle, Principles of inclusion and exclusions; Recurrence relations: Formulation/Modelling of different counting problems in terms of recurrence relations, Solution of linear recurrence relations with constant coefficients (upto second order) by (i) The iterative method (ii) Characteristic roots method (iii) Generating functions method.

10L

Module IV:

Graph Coloring: Chromatic Numbers and its bounds, Independence and Clique Numbers, Perfect Graphs-Definition and examples, Chromatic polynomial and its determination, Applications of Graph Coloring.
Matchings: Definitions and Examples of Perfect Matching, Maximal and Maximum Matching, Hall's Marriage Theorem (Statement only) and related problems.

6L

Texts:

1. Russell Merris, Combinatorics, Wiley-Interscience series in Discrete Mathematics and Optimisation
2. N. Chandrasekaran and M. Umaparvathi, Discrete Mathematics, PHI
3. Gary Haggard, John Schlipf and Sue Whitesides, Discrete Mathematics for Computer Science, CENGAGE Learning
4. Gary Chartrand and Ping Zhang – Introduction to Graph Theory, TMH

References:

10. J.K. Sharma, Discrete Mathematics, Macmillan

11. Winfried Karl Grassmann and Jean-Paul Tremblay, Logic and Discrete Mathematics, PEARSON.
12. S. K. Chakraborty and B. K. Sarkar, Discrete Mathematics, Oxford University Press.
13. Douglas B. West, Introduction to graph Theory, PHI

Human Resource Management (HSS) IT-605B
Contracts: 3L
Credits- 3

Introduction : HR Role and Functions, Concept and Significance of HR, Changing role of HR managers - HR functions and Global Environment, role of a HR Manager.

Human Resources Planning : HR Planning and Recruitment: Planning Process - planning at different levels - Job Analysis - Recruitment and selection processes - Restructuring strategies - Recruitment-Sources of Recruitment-Selection Process-Placement and Induction-Retention of Employees.

Training and Development : need for skill upgradation - Assessment of training needs - Retraining and Redeployment methods and techniques of training employees and executives - performance appraisal systems.

Performance Management System : Definition, Concepts and Ethics-Different methods of Performance Appraisal- Rating Errors-Competency management.

Industrial Relations : Factors influencing industrial relations - State Interventions and Legal Framework - Role of Trade unions - Collective Bargaining - Workers' participation in management.

Case study.

Books :

1. Gary Dessler, Human Resource Management - (8th ed.,) Pearson Education, Delhi
2.Decenzo & Robbins, Personnel / Human Resource Management, 3rd ed., John Wiley & Sons (Pvt.) Ltd.
3. Biswajeet Patanayak, Human Resource Management, PHI, New Delhi
4. Luis R. Gomez, Mejia, Balkin and Cardy, Managing Human Resources PHI, New Delhi.

Compiler Design IT-605C
Contracts: 3L
Credits- 3

Introduction to Compiling [3L]
Compilers, Analysis of the source program, The phases of the compiler, Cousins of the compiler.

Lexical Analysis [6L]
The role of the lexical analyzer, Tokens, Patterns, Lexemes, Input buffering, Specifications of a token, Recognition of a tokens, Finite automata, From a regular expression to an NFA, From a regular expression to NFA, From a regular expression to DFA, Design of a lexical analyzer generator (Lex).

Syntax Analysis [9L]
The role of a parser, Context free grammars, Writing a grammar, Top down Parsing, Non-recursive Predictive parsing (LL), Bottom up parsing, Handles, Viable prefixes, Operator precedence parsing, LR parsers (SLR, LALR), Parser generators (YACC). Error Recovery strategies for different parsing techniques.

Syntax directed translation [5L]
Syntax director definitions, Construction of syntax trees, Bottom-up evaluation of S attributed definitions, L attributed definitions, Bottom-up evaluation of inherited attributes.

Type checking [4L]
Type systems, Specification of a simple type checker, Equivalence of type expressions, Type conversions

Run time environments [5L]
Source language issues (Activation trees, Control stack, scope of declaration, Binding of names), Storage organization (Subdivision of run-time memory, Activation records), Storage allocation strategies, Parameter passing (call by value, call by reference, copy restore, call by name), Symbol tables, dynamic storage allocation techniques.

Intermediate code generation [4L]
Intermediate languages, Graphical representation, Three-address code, Implementation of three address statements (Quadruples, Triples, Indirect triples).

Code optimization [5L]
Introduction, Basic blocks & flow graphs, Transformation of basic blocks, Dag representation of basic blocks, The principle sources of optimization, Loops in flow graph, Peephole optimization.

Code generations [4L]
Issues in the design of code generator, a simple code generator, Register allocation & assignment.

Text books:

1. Aho, Sethi, Ullman - “Compiler Principles, Techniques and Tools” - Pearson Education.
2. Holub - “Compiler Design in C” - PHI.

Artificial Intelligence IT-605D
Contracts: 3L
Credits- 3

Introduction [2]
Overview of Artificial intelligence- Problems of AI, AI technique, Tic - Tac - Toe problem.

Intelligent Agents [2]
Agents & environment, nature of environment, structure of agents, goal based agents, utility based agents, learning agents.

Problem Solving [2]

Problems, Problem Space & search: Defining the problem as state space search, production system, problem characteristics, issues in the design of search programs.

Search techniques [5]

Solving problems by searching :problem solving agents, searching for solutions; uniform search strategies: breadth first search, depth first search, depth limited search, bidirectional search, comparing uniform search strategies.

Heuristic search strategies [5]

Greedy best-first search, A* search, memory bounded heuristic search: local search algorithms & optimization problems: Hill climbing search, simulated annealing search, local beam search, genetic algorithms; constraint satisfaction problems, local search for constraint satisfaction problems.

Adversarial search [3]

Games, optimal decisions & strategies in games, the minimax search procedure, alpha-beta pruning, additional refinements, iterative deepening.

Knowledge & reasoning [3]

Knowledge representation issues, representation & mapping, approaches to knowledge representation, issues in knowledge representation.

Using predicate logic [2]

Representing simple fact in logic, representing instant & ISA relationship, computable functions & predicates, resolution, natural deduction.

Representing knowledge using rules [3]

Procedural verses declarative knowledge, logic programming, forward verses backward reasoning, matching, control knowledge.

Probabilistic reasoning [4]

Representing knowledge in an uncertain domain, the semantics of Bayesian networks, Dempster-Shafer theory, Fuzzy sets & fuzzy logics.

Planning [2]

Overview, components of a planning system, Goal stack planning, Hierarchical planning, other planning techniques.

Natural Language processing [2]

Introduction, Syntactic processing, semantic analysis, discourse & pragmatic processing.

Learning [2]

Forms of learning, inductive learning, learning decision trees, explanation based learning, learning using relevance information, neural net learning & genetic learning.

Expert Systems [2]

Representing and using domain knowledge, expert system shells, knowledge acquisition.

Basic knowledge of programming language like Prolog & Lisp. [6]

Books:

1. Artificial Intelligence, Ritch & Knight, TMH
2. Artificial Intelligence A Modern Approach, Stuart Russel Peter Norvig Pearson
3. Introduction to Artificial Intelligence & Expert Systems, Patterson, PHI
4. Poole, Computational Intelligence, OUP
5. Logic & Prolog Programming, Saroj Kaushik, New Age International
6. Expert Systems, Giarranto, VIKAS

7. Artificial Intelligence, Russel, Pearson

Practical

Database Management System Lab
Code: IT691
Contact: 3P
Credits: 2

Structured Query Language

1. Creating Database
- Creating a Database
- Creating a Table
- Specifying Relational Data Types
- Specifying Constraints
- Creating Indexes

2. Table and Record Handling
- INSERT statement
- Using SELECT and INSERT together
- DELETE, UPDATE, TRUNCATE statements
- DROP, ALTER statements

3. Retrieving Data from a Database
1. The SELECT statement
2. Using the WHERE clause
3. Using Logical Operators in the WHERE clause
4. Using IN, BETWEEN, LIKE , ORDER BY, GROUP BY and HAVING

Clause

5. Using Aggregate Functions
6. Combining Tables Using JOINS
7. Subqueries

4. **Database Management**
- Creating Views
- Creating Column Aliases
- Creating Database Users
- Using GRANT and REVOKE

Cursors in Oracle PL / SQL
Writing Oracle PL / SQL Stored Procedures

Computer Networking Lab
Code: IT692
Contact: 3P
Credits: 2

□□□NIC Installation & Configuration (Windows/Linux)
2) Understanding IP address, subnet etc
□□□Familiarization with

x. Networking cables (CAT5, UTP)
xi. Connectors (RJ45, T-connector)
xii. Hubs, Switches

□□□TCP/UDP Socket Programming
- Simple, TCP based, UDP based

□□□Multicast & Broadcast Sockets
□□□Implementation of a Prototype Multithreaded Server
□□□□Implementation of
- Data Link Layer Flow Control Mechanism (Stop & Wait, Sliding Window)
- Data Link Layer Error Detection Mechanism (Cyclic Redundancy Check)
- Data Link Layer Error Control Mechanism (Selective Repeat, Go Back N)

8) Server Setup/Configuration
FTP, TelNet, NFS, DNS, Firewall

Software Engineering Lab
Code: IT693

Syllabus for B.Tech(Information Technology) Up to Fourth

Contact: 3P
Credits: 2

Pre-requisite: For Software Engineering Lab,design a project proposal which will be used throughout the lab for performing different experiments using CASE Tools.

1. Preparation of requirement document for proposed project in standard format.

2. Project Schedule preparation using tools like MSProject.Generation of Gnatt and PERT chart from schedule.Prepare Project Management Plan in standard format.

3. Draw Use Case diagram,Class diagram,Sequence diagram and prepare Software Design Document using tools like Rational Rose.
4. Estimate project size using Function Point(FP)/Use Case Point.Use Excel/Open Office template for calculation.
5. Design Test Script/Test Plan(both Black box and WhiteBox approach) for a small component of the proposed project.(Develop that component using programming languages like c/Java/VB etc.) 6.Generate

Test Result and perform defect root cause analysis using Pareto or Fishbone diagram. 7.Compute

Process and Product Metrics (e.g Defect Density,Defect Age,Productivity,Cost etc.) 8.Familiarization

with any Version Control System like CVS/VSS/Pvcs etc.

(Following projects can be used as dummy projects:
Library Management System
Railway Reservation System
Employee Payroll
Online Banking System
Online Shopping Cart
Online Examination)

Syllabus for B.Tech(Information Technology) Up to Fourth

Proposed VII
Semester Theory

Internet Technology
IT701
Contracts: 3L
Credits- 3 34L
Module I-6L
Introduction (1L):
Overview, Network of Networks, Intranet, Extranet and Internet.

World Wide Web (1L):
Domain and Sub domain, Address Resolution, DNS, Telnet, FTP, HTTP.

Review of TCP/IP (1L):
Features, Segment, Three-Way Handshaking, Flow Control, Error Control, Congestion control, IP Datagram, IPv4 and IPv6.

IP Subnetting and addressing (1L):
Classful and Classless Addressing, Subnetting. NAT, IP masquerading, IP tables.

Internet Routing Protocol (1L):
Routing -Intra and Inter Domain Routing, Unicast and Multicast Routing, Broadcast.

Electronic Mail (1L):
POP3, SMTP.
Module II-9L
HTML (3L):
Introduction, Editors, Elements, Attributes, Heading, Paragraph. Formatting, Link, Head, Table, List, Block, Layout, CSS. Form, Iframe, Colors, Colorname, Colorvalue.

Image Maps (1L):
map, area, attributes of image area.

Extensible Markup Language (XML) (4L):
Introduction, Tree, Syntax, Elements, Attributes, Validation, Viewing. XHTML in brief.

CGI Scripts (1L):
Introduction, Environment Variable, GET and POST Methods.
Module III-10L
PERL (3L):
Introduction, Variable, Condition, Loop, Array, Implementing data structure, Hash, String, Regular Expression, File handling, I/O handling.

JavaScript (4L):
Basics, Statements, comments, variable, comparison, condition, switch, loop, break. Object – string, array, Boolean, reg-ex. Function, Errors, Validation.

Cookies (1L):
Definition of cookies, Create and Store a cookie with example.

Java Applets (2L):
Container Class, Components, Applet Life Cycle, Update method; Parameter passing applet, Applications.
Module IV-4L
Client-Server programming In Java (2L):
Java Socket, Java RMI.

Threats (1L):
Malicious code-viruses, Trojan horses, worms; eavesdropping, spoofing, modification, denial of service attacks.

Network security techniques (2L):

Password and Authentication; VPN, IP Security, security in electronic transaction, Secure Socket Layer (SSL), Secure Shell (SSH).

Firewall (1L):
Introduction, Packet filtering, Stateful, Application layer, Proxy.

Module v-5L

Internet Telephony (1L):
Introduction, VoIP.

Multimedia Applications (2L):
Multimedia over IP: RSVP, RTP, RTCP and RTSP. Streaming media, Codec and Plugins, IPTV.

Search Engine and Web Crawler (2L):
Definition, Meta data, Web Crawler, Indexing, Page rank, overview of SEO.

Reference:

1. Web Technology: A Developer's Perspective, N.P. Gopalan and J. Akilandeswari, PHI Learning, Delhi, 2013. (Chapters 1-5,7,8,9).
2. Internetworking Technologies, An Engineering Perspective, Rahul Banerjee, PHI Learning, Delhi, 2011. (Chapters 5,6,12)

Multimedia
IT702
Contracts: 3L
Credits- 3

Introduction [2L]
Multimedia today, Impact of Multimedia, Multimedia Systems, Components and Its Applications

Text and Audio [6L]
Text: Types of Text, Ways to Present Text, Aspects of Text Design, Character, Character Set, Codes, Unicode, Encryption; Audio: Basic Sound Concepts, Types of Sound, Digitizing Sound, Computer Representation of Sound (Sampling Rate, Sampling Size, Quantization), Audio Formats, Audio tools, MIDI

Image and Video (8L)
Image: Formats, Image Color Scheme, Image Enhancement; Video: Analogue and Digital Video, Recording Formats and Standards (JPEG, MPEG, H.261) Transmission of Video Signals, Video Capture, and Computer based Animation.

Synchronization [4L]
Temporal relationships, synchronization accuracy specification factors, quality of service

Storage models and Access Techniques [(4L]
Magnetic media, optical media, file systems (traditional, multimedia)
Multimedia devices – Output devices, CD-ROM, DVD, Scanner, CCD

Image and Video Database [8L]
Image representation, segmentation, similarity based retrieval, image retrieval by color, shape and texture; indexing- k-d trees, R-trees, quad trees; Case studies- QBIC, Virage. Video Content, querying, video segmentation, indexing **Document Architecture and Content Management [9L]**
Content Design and Development, General Design Principles
Hypertext: Concept, Open Document Architecture (ODA), Multimedia and Hypermedia Coding Expert Group (MHEG), Standard Generalized Markup Language (SGML), Document Type Definition (DTD), Hypertext Markup Language (HTML) in Web Publishing. Case study of Applications

Multimedia Applications [4L]
Interactive television, Video-on-demand, Video Conferencing, Educational Applications, Industrial Applications, Multimedia archives and digital libraries, media editors.

Books:

1. Ralf Steinmetz and Klara Nahrstedt , Multimedia: Computing, Communications & Applications , Pearson Ed.
2. Nalin K. Sharda , Multimedia Information System , PHI.
3. Fred Halsall , Multimedia Communications , Pearson Ed.
4. Koegel Buford , Multimedia Systems , Pearson Ed.
5. Fred Hoffstetter , Multimedia Literacy , McGraw Hill.
6. Ralf Steinmetz and Klara Nahrstedt , Multimedia Fundamentals: Vol. 1- Media Coding and Content Processing , PHI.
7. J. Jeffcoate , Multimedia in Practice: Technology and Application , PHI.

8. Prabhat K. Andleigh & Kiran Thakrar , Multimedia Systems Design , PHI.

E Commerce
IT703A
Contracts: 3L
Credits- 3

Introduction to E-Commerce [6L]: Definition, Scope of E-Commerce, Hardware requirements, E-Commerce and Trade Cycle, Electronic Markets, Electronic Data Interchange and Internet Commerce.
Business to Business E-Commerce [7L]: Electronic Markets, Electronic Data Interchange (EDI): Technology, Standards (UN/EDIFACT), Communications, Implementations, Agreements, Security, EDI and Business, Inter-Organizational E- commerce.
Legal issues [5L]: Risks: Paper Document vs. Electronic document, Authentication of Electronic document, Laws, Legal issues for Internet Commerce: Trademarks and Domain names, Copyright, Jurisdiction issues, Service provider liability, Enforceable online contract.
Security Issues [6L]: Security Solutions: Symmetric and Asymmetric Cryptosystems, RSA, DES, and Digital Signature, Protocols for secure messaging, Secure Electronic Transaction (SET) Protocol, Electronic cash over internet, Internet Security.
Business to Consumer E-Commerce [8L]: Consumer trade transaction, Internet, Page on the Web, Elements of E- Commerce with VB, ASP, SQL.
E-business [7L]: Internet bookshops, Software supplies and support, Electronic Newspapers, Internet Banking, Virtual Auctions, Online Share Dealing, Gambling on the net, E-Diversity, Case studies through internet.
Books:

3. E-Commerce-Strategy, Technologies & Applications by David Whitley, TMH
4. E-Commerce- The cutting edge of business by Kamlesh K. Bajaj, TMH
5. E-Commerce through ASP by W Clarke- BPB
6. Beginning E-Commerce with VB, ASP, SQL Server 7.0 & MTS by Mathew Reynolds, Wrox Publishers
7. Global Electronic Commerce- Theory and Case Studies by J. Christopher Westland and Theodore H. K Clark, University Press

Soft Computing
IT703B
Contracts: 3L
Credits- 3
Module-I [2L]
Introduction: Introduction to soft computing; introduction to fuzzy sets and fuzzy logic systems; introduction to biological and artificial neural network; introduction to Genetic Algorithm.

Module-II [10L]
Fuzzy sets and Fuzzy logic systems:
Classical Sets and Fuzzy Sets and Fuzzy relations : Operations on Classical sets, properties of classical sets, Fuzzy set operations, properties of fuzzy sets, cardinality, operations, and properties of fuzzy relations.
Membership functions : Features of membership functions, standard forms and boundaries, different fuzzification methods.
Fuzzy to Crisp conversions: Lambda Cuts for fuzzy sets, fuzzy Relations, Defuzzification methods.
Classical Logic and Fuzzy Logic: Classical predicate logic, Fuzzy Logic, Approximate reasoning and Fuzzy Implication **Fuzzy Rule based Systems**: Linguistic Hedges, Fuzzy Rule based system – Aggregation of fuzzy Rules, Fuzzy Inference System-Mamdani Fuzzy Models – Sugeno Fuzzy Models.
Applications of Fuzzy Logic: How Fuzzy Logic is applied in Home Appliances, General Fuzzy Logic controllers, Basic Medical Diagnostic systems and Weather forecasting

Module-III [10L]
Neural Network
Introduction to Neural Networks: Advent of Modern Neuroscience, Classical AI and Neural Networks, Biological Neurons and Artificial neural network; model of artificial neuron.
Learning Methods : Hebbian, competitive, Boltzman etc.,
Neural Network models: Perceptron, Adaline and Madaline networks; single layer network; Back-propagation and multi layer networks.
Competitive learning networks: Kohonen self organizing networks, Hebbian learning; Hopfield Networks.
Neuo-Fuzzy modelling:
Applications of Neural Networks: Pattern Recognition and classification

Syllabus for B.Tech(Information Technology) Up to Fourth

Module-IV[10L]
Genetic Algorithms: Simple GA, crossover and mutation, Multi-objective Genetic Algorithm (MOGA). **Applications of Genetic Algorithm**: genetic algorithms in search and optimization, GA based clustering Algorithm, Image processing and pattern Recognition

Module-V [4L]
Other Soft Computing techniques: Simulated Annealing, Tabu search, Ant colony optimization (ACO), Particle Swarm Optimization (PSO).
Text Books:

1. Fuzzy logic with engineering applications, Timothy J. Ross, John Wiley and Sons.
2. S. Rajasekaran and G.A.V.Pai, "Neural Networks, Fuzzy Logic and Genetic Algorithms", PHI
3. Principles of Soft Computing , S N Sivanandam, S. Sumathi, John Wiley & Sons
4. Genetic Algorithms in search, Optimization & Machine Learning by David E. Goldberg
5. Neuro-Fuzzy and Soft computing, Jang, Sun, Mizutani, PHI
6. Neural Networks: A Classroom Approach,1/e by Kumar Satish, TMH,
7. Genetic Algorithms in search, Optimization & Machine Learning by David E. Goldberg, Pearson/PHI
8. A beginners approach to Soft Computing, Samir Roy & Udit Chakraborty, Pearson

Reference Books:

1. Fuzzy Sets and Fuzzy Logic: Theory and Applications, George J. Klir and Bo Yuan, Prentice Hall
2. Neural Networks: A Comprehensive Foundation (2nd Edition), Simon Haykin, Prentice Hall.

Image Processing
IT703C
Contracts: 3L
Credits- 3 38L
Introduction [3L]
Background, Digital Image Representation, Fundamental steps in Image Processing, Elements of Digital Image Processing - Image Acquisition, Storage, Processing, Communication, Display.

Digital Image Formation [4L]
A Simple Image Model, Geometric Model- Basic Transformation (Translation, Scaling, Rotation), Perspective Projection, Sampling & Quantization - Uniform & Non uniform.

Mathematical Preliminaries [9L]
Neighbour of pixels, Connectivity, Relations, Equivalence & Transitive Closure; Distance Measures, Arithmetic/Logic Operations, Fourier Transformation, Properties of The Two Dimensional Fourier Transform, Discrete Fourier Transform, Discrete Cosine & Sine Transform.

Image Enhancement [8L]
Spatial Domain Method, Frequency Domain Method, Contrast Enhancement -Linear & Nonlinear Stretching, Histogram Processing; Smoothing - Image Averaging, Mean Filter, Low-pass Filtering; Image Sharpening. High-pass Filtering, High- boost Filtering, Derivative Filtering, Homomorphic Filtering; Enhancement in the frequency domain - Low pass filtering, High pass filtering.

Image Restoration [7L]
Degradation Model, Discrete Formulation, Algebraic Approach to Restoration - Unconstrained & Constrained; Constrained Least Square Restoration, Restoration by Homomorphic Filtering, Geometric Transformation - Spatial Transformation, Gray Level Interpolation.

Image Segmentation [7L]
Point Detection, Line Detection, Edge detection, Combined detection, Edge Linking & Boundary Detection - Local Processing, Global Processing via The Hough Transform; Thresholding - Foundation, Simple Global Thresholding, Optimal Thresholding; Region Oriented Segmentation - Basic Formulation, Region Growing by Pixel Aggregation, Region Splitting & Merging.
Books:
1. Digital Image Processing, Gonzalves,Pearson
2. Digital Image Processing, Jahne, Springer India

3.Digital Image Processing & Analysis,Chanda & Majumder,PHI
4.Fundamentals of Digital Image Processing, Jain, PHI
5. Image Processing, Analysis & Machine Vision, Sonka, VIKAS
6. Getting Started with GIS- Clarke Keith. C; PE.
7. Concepts & Techniques of GIS - Lo C.P, Albert, Yeung K.W- PHI.

Distributed Operating System
IT704A
Contracts: 3L
Credits- 3 [36L]

Introduction to Distributed System [2]
Introduction, Examples of distributed system, Resource sharing, Challenges

Operating System Structures: [3]
Review of structures: monolithic kernel, layered systems, virtual machines. Process based models and client server architecture; The micro-kernel based client-server approach.

Communication [4]
Inter-process communication , Remote Procedure Call, Remote Object Invocation, Tasks and Threads. Examples from LINUX, Solaris 2 and Windows NT.

Theoretical Foundations: [2]
Introduction. Inherent Limitations of distributed Systems. Lamport's Logical clock. Global State

Distributed Mutual Exclusion:[4]
Classification of distributed mutual exclusion algorithm. NonToken based Algorithm:Lamport's algorithm, Ricart-Agrawala algorithm. Token based Algorithm: Suzuki-Kasami's broadcast algorithm.

Distributed Deadlock Detection: [4]
Deadlock handling strategies in distributed systems. Control organizations for distributed deadlock detection. Centralized and Distributed deadlock detection algorithms: Completely Centralized algorithms, path pushing, edge chasing, global state detection algorithm.

Protection and Security: [4]
Requirements for protection and security regimes. The access matrix model of protection. System and user modes, rings of protection, access lists, capabilities. User authentication, passwords and signatures. Use of single key and public key encryption.

Distributed file systems: [6]
Issues in the design of distributed file systems: naming, transparency, update semantics and fault resilience. Use of the Virtual File System layer. Examples of distributed systems including Sun NFS, the Andrew filestore, CODA file system and OSF DCE.

Distributed Shared Memory: [4]
Architecture and motivations. Algorithms for implementing DSM. Memory Coherence

CORBA: [3]
The Common Object Request Broker Architecture model and software and its relationship to Operating Systems.

Books:
1 Andrew S. Tanenbaum and Maarten Van Steen, Distributed Systems Principles and Paradigms, PHI
2. Singhal Mukesh & Shivaratri N. G., Advanced Concepts in Operating Systems, TMH
3. Tanenbaum, A. S. Distributed Operating Systems, (ISBN 0-131-439-340), Prentice Hall 199
4. Tanenbaum, A. S. Modern Operating Systems, 2nd Edition (ISBN 0-13-031358-0), Prentice Hall 2001.
5. Bacon, J., Concurrent Systems, 2nd Edition, (ISBN 0-201-177-676), Addison Wesley 1998.
6.Silberschatz, A., Galvin, P. and Gagne, G., Applied Operating Systems Concepts, 1st Edition, (ISBN 0-471-36508-4), Wiley 2000.
7.Coulouris, G. et al, Distributed Systems: Concepts and Design, 3rd Edition, (ISBN 0-201-61918-0), Addison Wesley 2001.

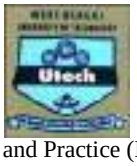

8.Galli, D.L., Distributed Operating Systems: Concepts and Practice (ISBN 0-13-079843-6), Prentice-Hall 2000.

Cloud Computing
IT704B
Contracts: 3L
Credits- 3

Module 1: Definition of Cloud Computing and its Basics (Lectures : 9)

1. **Definition of Cloud Computing:**
   Defining a Cloud, Cloud Types – NIST model, Cloud Cube model, Deployment models (Public , Private, Hybrid and Community Clouds), Service models – Infrastructure as a Service, Platform as a Service, Software as a Service with examples of services/ service providers, Cloud Reference model
   Characteristics of Cloud Computing – a shift in paradigm
   Benefits and advantages of Cloud Computing
2. **Cloud Architecture:**
   A brief introduction on Composability, Infrastructure, Platforms, Virtual Appliances, Communication Protocols, Applications, Connecting to the Cloud by Clients
3. **Services and Applications by Type**
   IaaS – Basic concept, Workload, partitioning of virtual private server instances, Pods, aggregations, silos
   PaaS – Basic concept, tools and development environment with examples
   SaaS - Basic concept and characteristics, Open SaaS and SOA, examples of SaaS platform
   Identity as a Service (IDaaS)
   Compliance as a Service (CaaS)

Module 2 : Use of Platforms in Cloud Computing (Lectures : 12)

1. **Concepts of Abstraction and Virtualization**
   Virtualization technologies : Types of virtualization (access, application, CPU, storage), Mobility patterns (P2V, V2V, V2P, P2P, D2C, C2C, C2D, D2D)
   Load Balancing and Virtualization: Basic Concepts, Network resources for load balancing, Advanced load balancing (including Application Delivery Controller and Application Delivery Network), Mention of The Google Cloud as an example of use of load balancing
   Hypervisors: Virtual machine technology and types, VMware vSphere Machine
   Imaging (including mention of Open Virtualization Format – OVF)
   Porting of applications in the Cloud: The simple Cloud API and AppZero Virtual Application appliance
2. **Concepts of Platform as a Service**
   Definition of services, Distinction between SaaS and PaaS (knowledge of Salesforce.com and Force.com), Application development
   Use of PaaS Application frameworks
3. **Use of Google Web Services**
   Discussion of Google Applications Portfolio – Indexed search, Dark Web, Aggregation and disintermediation, Productivity applications and service, Adwords, Google Analytics, Google Translate, a brief discussion on Google Toolkit (including introduction of Google APIs in brief), major features of Google App Engine service.
4. **Use of Amazon Web Services**

Amazon Web Service components and services: Amazon Elastic Cloud, Amazon Simple Storage system, Amazon Elastic Block Store, Amazon SimpleDB and Relational Database Service

5. **Use of Microsoft Cloud Services**

   Windows Azure platform: Microsoft's approach, architecture, and main elements, overview of Windows Azure AppFabric, Content Delivery Network, SQL Azure, and Windows Live services

Module 3 : Cloud Infrastructure (Lectures : 7)

Types of services required in implementation – Consulting, Configuration, Customization and Support

1. **Cloud Management**

   An overview of the features of network management systems and a brief introduction of related products from large cloud vendors, Monitoring of an entire cloud computing deployment stack – an overview with mention of some products, Lifecycle management of cloud services (six stages of lifecycle)

2. **Concepts of Cloud Security**

   Cloud security concerns, Security boundary, Security service boundary

   Overview of security mapping

   Security of data: Brokered cloud storage access, Storage location and tenancy, encryption, and auditing and compliance

   Identity management (awareness of Identity protocol standards)

Module 4 : Concepts of Services and Applications (Lectures : 8)

1. **Service Oriented Architecture:** Basic concepts of message-based transactions, Protocol stack for an SOA architecture, Event-driven SOA, Enterprise Service Bus, Service catalogs
2. **Applications in the Cloud:** Concepts of cloud transactions, functionality mapping, Application attributes, Cloud service attributes, System abstraction and Cloud Bursting, Applications and Cloud APIs
3. **Cloud-based Storage:** Cloud storage definition – Manned and Unmanned
4. **Webmail Services:** Cloud mail services including Google Gmail, Mail2Web, Windows Live Hotmail, Yahoo mail, concepts of Syndication services

Books Recommended:

1. Cloud Computing Bible by Barrie Sosinsky, Wiley India Pvt. Ltd, 2013
2. Mastering Cloud Computing by Rajkumar Buyya, Christian Vecchiola, S. Thamarai Selvi, McGraw Hill Education (India) Private Limited, 2013
3. Cloud computing: A practical approach, Anthony T. Velte, Tata Mcgraw-Hill
4. Cloud Computing, Miller, Pearson
5. Building applications in cloud:Concept, Patterns and Projects, Moyer, Pearson

References:

1. Cloud Computing – Second Edition by Dr. Kumar Saurabh, Wiley India

Data Warehousing & Data Mining
IT704C
Contracts: 3L
Credits- 3

Module 1: Overview and Concepts of Data Warehousing (Lectures : 9)

4. **Overview of Data warehousing**

   Strategic information and the need for Data warehousing, Defining a Data warehouse, Evolution of Data warehousing, Data warehousing and Business Intelligence

Syllabus for B.Tech(Information Technology) Up to Fourth

5. **The Building Blocks of Data warehouse**

Defining features – Subject-oriented data, Integrated data, Time-variant data, Nonvolatile data, Data granularity Data warehouses and Data marts

Architectural Types – Centralized, Independent data marts, Federated, Hub-and-Spoke, Data mart bus Overview of components - Source Data, Data Staging, Data Storage, Information Delivery, Metadata, and Management and Control components

6. **Business Requirements and Data warehouse**

Dimensional nature of Business data and Dimensional Analysis, Dimension hierarchies and categories, Key Business Metrics (Facts), Requirement Gathering methods and Requirements Definition Document (contents) Business Requirements and Data Design – Structure for Business Dimensions and Key Measurements, Levels of detail Business Requirements and the Architecture plan Business

Requirements and Data Storage Specifications Business

Requirements and Information Delivery Strategy

Module 2 : Data warehouse Architecture and Infrastructure (Lectures : 8)

6. **Architectural components**

Concepts of Data warehouse architecture – Definition and architecture in the areas of Data acquisition, Data storage, and Information delivery

Distinguishing characteristics – Different objectives and scope, Data content, Complex analysis for faster response, Flexible and Dynamic, Metadata-driven etc

Architectural Framework – supporting flow of data, and the Management and Control module

Technical architecture – Data acquisition, Data storage, and Information delivery

Overview of the components of Architectural Types introduced in Module 1.

7. **Infrastructure for Data warehousing**

Distinction between architecture and infrastructure, Understanding of how data warehouse infrastructure supports its architecture

Components of physical infrastructure, Hardware and Operating systems for data warehouse, Database Software, Collection of Tools,

Data warehouse Appliances – evolution and benefits

8. **The role of Metadata**

Understanding the importance of Metadata

Metadata types by functional areas – Data acquisition, Data storage, and Information delivery

Business Metadata – overview of content and examples

Technical Metadata – overview of content and examples

Metadata Requirements, Sources of Metadata, Metadata management – challenges, Metadata Repository, Metadata integration and standards

Module 3 : Data Design and Data Preparation (Lectures : 9)

3. **Principles of Dimensional Modeling**

Data Design – Design decisions, Basics of Dimensional modeling, E-R modeling versus Dimensional modeling The STAR schema – illustration, Dimension Table, Fact Table, Factless Fact Table, Data granularity

STAR schema keys – Primary, Surrogate, and Foreign

Advantages of the STAR schema, STAR schema examples

4. **Data Extraction, Transformation, and Loading**

Overview of ETL, Requirements of ETL and steps

Data extraction – identification of sources and techniques

Data transformation – Basic tasks, Transformation types, Data integration and consolidation, Transformation for dimension attributes

Data loading – Techniques and processes, Data refresh versus update, Procedures for Dimension tables, Fact tables : History and incremental loads

ETL Tool options

5. **Data Quality**

Importance of data quality, Challenges for data quality, Data quality tools, Data cleansing and purification, Master Data Management

Module 4 : Information access and delivery (Lectures : 10)

5. **Matching information to classes of users**

Information from Data warehouse versus Operational systems, Users of information – their needs and how to provide information

Information delivery – queries, reports, analysis, and applications

Information delivery tools – Desktop environment, Methodology and criteria for tool selection, Information delivery framework, Business Activity Monitoring, Dashboards and Scorecards

6. **OLAP in Data warehouse**

Overall concept of Online Analytical Processing (OLAP), OLAP definitions and rules, OLAP characteristics

Major features and functions of OLAP – General features, Dimensional analysis, Hypercubes, Drill Down and Roll Up, Slice and Dice, Rotation, Uses and Benefits

Familiarity with OLAP models – Overview of variations, MOLAP, ROLAP, HOLAP, DOLAP, Database OLAP, Web OLAP

7. **Data Warehouse and the web**

Web-enabled Data Warehouse – adapting data warehouse for the web

Web-based information delivery – Browser technology for data warehouse and Security issues

OLAP and Web – Enterprise OLAP, Web-OLAP approaches, OLAP Engine design

8. **Data Mining**

Overview of Data mining – Definition, Knowledge Discovery Process (Relationships, Patterns, Phases of the process), OLAP versus Data mining

Some aspects of Data mining – Association rules, Outlier analysis, Predictive analytics etc)

Concepts of Data mining in a Data warehouse environment

Major Data Mining techniques – Cluster Detection, Decision Trees, Memory-based Reasoning, Link Analysis, Neural Networks, Genetic Algorithms etc

Data Mining Applications in industry – Benefits of Data mining, Discussion on applications in Customer Relationship Management (CRM), Retail, Telecommunication, Biotechnology, Banking and Finance etc

Books Recommended:

6. Data Warehousing Fundamentals for IT Professionals, Second Edition by Paulraj Ponniah, Wiley India

References:

2. Data Warehousing, Data Mining, & OLAP – Second Edition by Alex Berson and Stephen J. Smith, Tata McGraw Hill Education
3. Data warehouse Toolkit by Ralph Kimball, Wiley India

Sensor Networks
IT704D
Contracts: 3L
Credits- 3

Module I: Introduction and Overview [4L]
Learning Objective: To provide an overview about sensor networks and emerging technologies.

Overview of wireless networks, types, infrastructure-based and infrastructure-less, introduction to MANETs (Mobile Ad-hoc Networks), characteristics, reactive and proactive routing protocols with examples, introduction to sensor networks, commonalities and differences with MANETs, constraints and challenges, advantages, applications, enabling technologies for WSNs.

Module II: Architectures [9L]
Learning Objective: To study about the node and network architecture of sensor nodes and its execution environment.

Single-node architecture - hardware components, design constraints, energy consumption of sensor nodes , operating systems and execution environments, examples of sensor nodes, sensor network scenarios, types of sources and sinks – single hop vs. multi hop networks, multiple sources and sinks – mobility, optimization goals and figures of merit, gateway concepts, design principles for WSNs, service interfaces for WSNs.

Module III: Communication Protocols [9L]
Learning Objective: To understand the concepts of communication, MAC, routing protocols and also study about the naming and addressing in WSN.

Physical layer and transceiver design considerations, MAC protocols for wireless sensor networks, low duty cycle protocols and wakeup concepts - S-MAC , the mediation device protocol, wakeup radio concepts, address and name management, assignment of MAC addresses, routing protocols- classification, gossiping, flooding, energy-efficient routing, unicast protocols, multi-path routing, data-centric routing, data aggregation, SPIN, LEACH, Directed-Diffusion, geographic routing.

Module IV: Infrastructure Establishment [9L]
Learning Objective: To learn about topology control and clustering in networks with timing synchronization for localization services with sensor tasking and control.

Topology control, flat network topologies, hierarchical networks by clustering, time synchronization, properties, protocols based on sender-receiver and receiver-receiver synchronization, LTS, TPSN, RBS, HRTS, localization and positioning, properties and approaches, single-hop localization, positioning in multi-hop environment, range based localization algorithms – location services, sensor tasking and control.

Module V: Sensor Network Platforms and Tools [9L]
Learning Objective: To study about sensor node hardware and software platforms and understand the simulation and programming techniques.

Sensor node hardware, Berkeley motes, programming challenges, node-level software platforms, node-level simulators, state-centric programming, Tiny OS, nesC components, NS2 simulator, TOSSIM.

TEXT BOOKS

1. Holger Karl & Andreas Willig, “Protocols and Architectures for Wireless Sensor Networks”, John Wiley, 2005.
2. Feng Zhao & Leonidas J. Guibas, “Wireless Sensor Networks- An Information Processing Approach", Elsevier, 2007.

REFERENCES

1. Kazem Sohraby, Daniel Minoli, & Taieb Znati, “Wireless Sensor Networks- Technology, Protocols, and Applications”, John Wiley, 2007.
2. Anna Hac, “Wireless Sensor Network Designs”, John Wiley, 2003.
3. Thomas Haenselmann, "Sensor Networks", available online for free, 2008.

4. Edgar Callaway, "Wireless Sensor Networks: Architectures and Protocols", Auerbach, 2003.

Mobile Computing
IT704E
Contracts: 3L
Credits- 3

Introduction to Personal Communications Services (PCS): PCS Architecture, Mobility management, Networks signalling. Global System for Mobile Communication (GSM) system overview: GSM Architecture, Mobility management, Network signalling. **[5L**

General Packet Radio Services (GPRS): GPRS Architecture, GPRS Network Nodes. Mobile Data Communication: WLANs (Wireless LANs) IEEE 802.11 standard, Mobile IP.
[5L
Wireless Application Protocol (WAP): The Mobile Internet standard, WAP Gateway and Protocols, wireless mark up Languages (WML). Wireless Local Loop(WLL): Introduction to WLL Architecture, wireless Local Loop Technologies.
[7L

Third Generation (3G) Mobile Services: Introduction to International Mobile Telecommunications 2000 (IMT 2000) vision, Wideband Code Division Multiple Access (W-CDMA), and CDMA 2000, Quality of services in 3G.
[7L

Global Mobile Satellite Systems; case studies of the IRIDIUM and GLOBALSTAR systems. Wireless Enterprise Networks: Introduction to Virtual Networks, Blue tooth technology, Blue tooth Protocols.
[7L

Server-side programming in Java, Pervasive web application architecture, Device independent example application
[8L

Text :
1. "Pervasive Computing", Burkhardt, Pearson
2. "Mobile Communication", J. Schiller, Pearson
3. "Wireless and Mobile Networks Architectures", Yi-Bing Lin & Imrich Chlamtac, John Wiley & Sons, 2001
4. "Mobile and Personal Communication systems and services", Raj Pandya, Prentice Hall of India, 2001.

Reference :
1. "Guide to Designing and Implementing wireless LANs", Mark Ciampa, Thomson learning, Vikas Publishing House, 2001.
2. "Wireless Web Development", Ray Rischpater, Springer Publishing,
3. "The Wireless Application Protocol", Sandeep Singhal, Pearson .
4. "Third Generation Mobile Telecommunication systems", by P.Stavronlakis, Springer Publishers,

Bio Informatics(Proposed)
IT705A
Contracts: 3L
Credits- 3

MODULE 1: INTRODUCTION TO MOLECULAR BIOLOGY 5
Concepts of Cell, tissue, types of cell, components of cell, organelle. Functions of different organelles.
Concepts of DNA: Basic Structure of DNA; Double Helix structure; Watson and crick model. Exons and Introns and Gene Concept.
Concepts of RNA : Basic structure, Difference between RNA and DNA. Types of RNA.
Concept of Protein: Basic components and structure. Introduction to Central Dogma: Transcription and Tranlation
Introduction to Metabolic Pathways.

Module 2: Sequence Databases 2
Introduction to Bioinformatics. Recent challenges in Bioinformatics. Protein Sequence Databases, DNA sequence databases. sequence database search programs like BLAST and FASTA. NCBI different modules: GenBank; OMIM, Taxonomy browser, PubMed;
Module 3 DNA SEQUENCE ANALYSIS 14

DNA Mapping and Assembly : Size of Human DNA ,Copying DNA: Polymerase Chain Reaction (PCR), Hybridization and Microarrays, Cutting DNA into Fragments, Sequencing Short DNA Molecules, Mapping Long DNA Molecules. DeBruijn Graph.

Sequence Alignment: Introduction, local and global alignment, pair wise and multiple alignment, Dynamic Programming Concept. Alignment algorithms: Needleman and Wunsch algorithm, Smith-Waterman.

Module 4 : Introduction Probabilistic models used in Computational Biology 8

Probabilistic Models; Hidden Markov Model : Concepts, Architecture, Transition matrix, estimation matrix. Application of HMM in Bioinformatics : Genefinding, profile searches, multiple sequence alignment and regulatory site identification. Bayesian networks Model :Architecture, Principle ,Application in Bioinformatics. Module

5: Biological Data Classification and Clustering 6

Assigning protein function and predicting splice sites: Decision Tree

Control System
IT705B
Contracts: 3L
Credits- 3

36L
Module – I:
a) INTRODUCTION
Concepts of Control Systems- Open Loop and closed loop control systems and their differences- Different examples of control systems- Classification of control systems, Feed-Back Characteristics, Effects of feedback. Mathematical models – Differential equations, Impulse Response and transfer functions - Translational and Rotational mechanical systems [4L]

Module – I:
b) TRANSFER FUNCTION REPRESENTATION
Transfer Function of linear systems, Block diagram representation of systems considering electrical systems as examples - Block diagram algebra – Representation by Signal flow graph - Reduction using mason's gain formula.
[4L]

Module – II:
a) TIME RESPONSE ANALYSIS
Standard test signals - Time response of first order systems – Characteristic Equation of Feedback control systems, Transient response of second order systems - Time domain specifications – Steady state response - Steady state errors and error constants. [4L]

b) STABILITY ANALYSIS IN S-DOMAIN
The concept of stability – Routh's stability criterion – limitations of Routh's stability.
Root Locus Technique: The root locus concept - construction of root loci-effects of adding poles and zeros to G(s)H(s) on the root loci. [5L]

Module – III:
a) FREQUENCY RESPONSE ANALYSIS
Introduction, Frequency domain specifications-Bode diagrams-Determination of Frequency domain specifications and transfer function from the Bode Diagram-Phase margin and Gain margin-Stability Analysis from Bode Plots. [5L]
b) : STABILITY ANALYSIS IN FREQUENCY DOMAIN
Polar Plots, Nyquist Plots Stability Analysis. [4L]

Module - IV :
a) CLASSICAL CONTROL DESIGN TECHNIQUES
Compensation techniques – Lag, Lead, Lead-Lag Controllers design in frequency Domain, PID Controllers. [5L]
b) STATE SPACE ANALYSIS OF CONTINUOUS SYSTEMS
Concepts of state, state variables and state model, derivation of state models from block diagrams, Diagonalization- Solving the Time invariant state Equations- State Transition Matrix and it's Properties – Concepts of Controllability and Observability [5L]

TEXT BOOKS:
Automatic Control Systems 8th edition– by B. C. Kuo 2003– John Wiley and son's.,
2. Control Systems Engineering – by I. J. Nagrath and M. Gopal, New Age International

(P) Limited, Publishers, 2nd edition.

REFERENCE BOOKS:

1. Modern Control Engineering – by Katsuhiko Ogata – Prentice Hall of India Pvt. Ltd., 3rd edition, 1998.
2. Control Systems Engg. by NISE 3rd Edition – John Wiley

Modelling & Simulation
IT705C
Contracts: 3L
Credits- 3

Module-I: Introduction to Modelling and Simulation :

Nature of Simulation. Systems , Models and Simulation, Continuous and Discrete Systems, system modelling, Components of a simulation study, Introduction to Static and Dynamic System simulation , Application areas, Advantages ,Disadvantages and pitfalls of Simulation.

Module –II : System Dynamics & Probability concepts in Simulation :

Exponential growth and decay models, Generalization of growth models , Discrete and Continuous probability functions, Continuous Uniformly Distributed Random Numbers, Generation of a Random numbers, Generating Discrete distributions, Non-Uniform Continuously Distributed Random Numbers, Rejection Method.

Module-III : Simulation of Queuing Systems and Discrete System Simulation :

Poisson arrival patterns, Exponential distribution, Service times, Normal Distribution Queuing Disciplines, Simulation of single and two server queue. Application of queuing theory in computer system. Discrete Events ,Generation of arrival patterns ,Simulation programming tasks , Gathering statistics, Measuring occupancy and Utilization , Recording Distributions and Transit times .

Module-IV : Analysis of Simulation output :

Sensitivity Analysis, Validation of Model Results

Text Books:

1. Jerry Banks, John Carson, B.L.Nelson and D.M.Nicol " Discrete Event System Simulation", Fifth Edition, Pearson.
9. Narsingh Deo, 1979, System Simulation with Digital Computers, PHI.
10. Geoffrey Gordon, "System Simulation", PHI.
11. Averill M. Law and W.David Kelton, "Simulation Modelling and Analysis", Third Edition, McGraw Hill
12. J. N. Kapoor.. Mathematical Modelling, Wiley eastern Limited.

Reference Books:

1. Sankar Sengupta, "System Simulation and Modeling", Pearson.
2. C.Dennis Pegden, Robert E.Shannon and Randall P.Sadowski, 1995, Introduction to Simulation using SIMAN, 2nd Edn., Tata McGraw-Hill.
3. A.M.Law and W.D.Kelton.. Simulation Modelling and Analysis, T.M.H. Edition.

Microelectronics & VLSI Design
IT705D
Contracts: 3L
Credits- 3 36L

Module	Content	Hour
1	**Introduction to VLSI Design**: VLSI Design Concepts, Moor's Law, Scale of Integration (SSI, MSI, LSI, VLSI, ULSI – basic idea only), Types of VLSI Chips (Analog & Digital VLSI chips, General purpose, ASIC, PLA, FPGA), Design principles (Digital VLSI – Concept of Regularity, Granularity etc), Design Domains (Behavioral, Structural, Physical), Y-Chart, Digital VLSI Design Steps.	6

2	**MOS structure**: E-MOS & D-MOS, Charge inversion in E-MOS, Threshold voltage, Flat-band voltage, Potential balance & Charge balance, Inversion, MOS capacitances. **Three Terminal MOS Structure:** Body effect. **Four Terminal MOS Transistor**: Drain current, I-V characteristics. Current-voltage equations (simple derivation). **Scaling in MOSFET**: Short Channel Effects, General scaling, Constant Voltage & Field scaling.] **CMOS**: CMOS inverter, Simple Combinational Gates - NAND gate and NOR Gate using CMOS.	10
3	**Micro-electronic Processes for VLSI Fabrication**: Silicon Semiconductor Technology- An Overview, Wafer processing, Oxidation, Epitaxial deposition, Ion-implantation & Diffusion, Cleaning, Etching, Photo-lithography – Positive & Negative photo-resist **Basic CMOS Technology** – (Steps in fabricating CMOS), Basic n-well CMOS process, p-well CMOS process, Twin tub process, Silicon on insulator **Layout Design Rule**: Stick diagram with examples, Layout rules.	10
4	**Hardware Description Language** – VHDL or Verilog Combinational & Sequential Logic circuit Design.	10

Text Books
1. Digital Integrated Circuit, J.M.Rabaey, Chandrasan, Nicolic, Pearson Education.
2. CMOS Digital Integrated Circuit, S.M.Kang & Y.Leblebici, TMH.
3. Modern VLSI Design, Wayne Wolf, Pearson Education.
4. VHDL, Bhaskar, PHI.
5. Advance Digital Design Using Verilog , Michel D. Celliti, PHI

References:
1. Digital Integrated Circuits, Demassa & Ciccone, John Willey & Sons .
2. Modern VLSI Design: system on silicon, Wayne Wolf; Addison Wesley Longman Publisher
3. Basic VLSI Design, Douglas A. Pucknell & Kamran Eshranghian, PHI
4. CMOS Circuit Design, Layout & Simulation, R.J.Baker, H.W.Lee, D.E. Boyee, PHI

Advanced Data Communication & Coding(Proposed) IT705E
Contracts: 3L
Credits- 3

Advanced Data Communication and Coding [40L]
1. Prerequisites: Data and signals, Classification of signals, Communications systems, analog and digital communication systems, Applications of communication systems. [2L]
2. Digital Communication: Nyquist Sampling theorem, Inter-symbol interference and its removal, line codes (polar, unipolar, bipolar, Manchester), Detection error probability (polar, unipolar, bipolar), Digital Modulation techniques (ASK, FSK, BPSK, QPSK, QAM, PCM, DPCM, Delta Modulation, Adaptive Delta Modulation), Digital Transmission and Transmission Impairments. [10L]
3. Optical Networks: WDM, Telecommunication Infrastructure, Switching, SONET, PDH and SDH, bit interleaving, Architecture of Optical Transport Network, Link Management Protocols, Solutions. [8L]
4. Satellite Communication: Basic Transmission Theory, System Noise Temperature and G/T Ratio, Design Of Down Links, Domestic Satellite Systems Using Small Earth Stations, Uplink Design, Design Of Satellite Link For Specified (C/N). Multiple Access Techniques, Frequency Division Multiple Access (FDMA), TDMA, CDMA, Estimating Channel Requirements, Practical Demand Access Systems, Random Access, Multiple Access With On Board Processing, VSAT. [10L]
5. Mobile Communications: Mobile telephone service, Transmission protocols, Introduction to GSM, GPRS, CDMA, Switching techniques, Fading, Quality of service (QOS). [8L]
Books Recommended:
[1] Advanced Communication Systems by Wayne Tomasi; Pearson.
[2] Digital Communication by Proakis; PHI
[3] Optical Networks by Uyless Black; Pearson
[4] Satellite Communication by Timothy Pratt; Addison Wesley.

Practical

Group Discussion
HU781
Contracts: 3L

Syllabus for B.Tech(Information Technology) Up to Fourth

Credits- 2

To be introduced.

Internet Technology Lab
IT791
Contracts: 3L
Credits- 2

Applet
1. Create a banner using Applet
2. Display clock using Applet
3. Create different shapes using Applet
4. Fill colors in shapes using Applet
5. Goto a link using Applet
6. Create an event listener in Applet
7. Display image using Applet
8. Open a link in a new window using Applet
9. Play sound using Applet
10. Read a file using Applet
11. Write to a file using Applet

JavaScript
12. Validate the fields of a form using JavaScript.
13. Guess a number based on user input.
14. Program on image rollover using JavaScript.
15. Display clock using JavaScript.
16. Prompt, alert, array, looping in JavaScript.
17. Calculator using JavaScript.
18. Validate e-mail, phone no. using reg-ex in JavaScript. Perl

19. Write a perl script to implement associative array.
20. Write a perl script to implement the regular expression as follows:

a). If a string contains any vowel, count the total number of vowels. b). If a string starts with MCA and end with bw, print 1 else 0.
c). If string starts with 0 or any no. a's, then print 1 else 0.
21. Write an html code to call a perl script from cgi-bin.
22. Implement the following with regular expression in Perl:
a). a*bc
b). a* at least 2 b's c).
a*exactly 3 b's
23. A simple File operation using Perl.

Client Server Programming

24. Write a socket program to get the current date and time from the server.
25. Write a socket program where the client will send lowercase letters and the server will return uppercase letter.
26. Write a server and a client program to implement TCP chat server-client.
27. Create a simple calculator application using Java RMI.

HTML

1. Start your web page with an <html> tag
   i) Add a heading.
   ii) Add a title.
   iii) Start the <body> section.
   iv) Add the following text using <H1> and </H1> tags:

This Web page was designed by (your name)

   v) Add the following text using <H2> and </H2> tags: My HTML assignment
   vi) Add a horizontal line
   vii) Insert an image to your web page.

Syllabus for B.Tech(Information Technology) Up to Fourth

Note: You should then refer to your image with just the filename, and NOT the entire pathname to the file.

viii) Add another horizontal line.

ix) Enter a paragraph of text.

Write about things you have learned in html.

Make sure the text in this paragraph is a color other than black, but something one can see.

Add a link that takes you to your favorite webpage.

x) Start a new paragraph. Add a three item ordered list. Make it creative (don't just say item 1, item 2, etc… and keep it clean)!

xi) Close out your body and html tags.

2. Start your web page with an <html> tag

i) Add a heading.

ii) Add a title.

iii) Start the <body> section.

iv) Start a new paragraph. Use
alignment attribute,
Use bold, italic, underline tags,
Use font tag and associated attributes, Use
heading tags,
Use preserve tag,
Use non breaking spaces (escape character).

3. Start your web page with an <html> tag

i) Add a heading.

ii) Add a title.

iii) Start the <body> section.

iv) Start a new paragraph.

Create Hyperlinks:

(a) Within the HTML document.

(b) To another URL.

(c) To a file that can be rendered in the browser.

4. Start your web page with an <html> tag

i) Add a heading.

ii) Add a title.

iii) Start the <body> section.

Create an unordered list,
Create an ordered list, Use
various bullet styles, Created
nested lists,
Use the font tag in conjunction with lists,
Create definition lists,
Use graphics as bullets.

5. Start your web page with an <html> tag

i) Add a heading.

ii) Add a title.

iii) Start the <body> section.

a) Create a simple table
Create borders and adjust border size.

Adjust table cell spacing.

Change border color.

Change table background color.

b) Align a new table on HTML page.
Perform cell text alignment,
Create multi-column tables,
Display information about your academic qualification into this table.

6. Start your web page with an <html> tag

i) Add a heading.

ii) Add a title.

iii) Start the <body> section.

Create a frameset:
Use frame tags,
Create vertical (column) frames,
Create horizontal (row) frames,
Create complex framesets,
Use the hyperlink tag to target displaying an HTML page to another frame.

7. Start your web page with an <html> tag
   i) Add a heading.
   ii) Add a title.
   iii) Start the <body> section.

Create a simple HTML form.
Use the input tag to create a: text box; text area box; check box; list box; radio button; password field; popup menu; hidden field. Use submit and reset buttons. Create an admission form using the above information.
8. Create a web page that will include an image. Then create image map to watch different parts of that image closely.

9. Using frames as an interface, create a series of web pages where the theme is to provide resources (internet, intranet, static HTML pages) pertaining to the subject of HTML. Ideally, your goal is to create a resource that you can use long after this module when needing information on HTML. As a minimum requirement to this assignment your webpage should:
• Consist of at least 3 frames.
• Contain at least 5 URLs to internet and/or intranet sites that you can reference as part of your job.
• Contain at least 5 references to documents that you have created that you use on a regular basis.
• Contain at least 5 references to documents others have created that you use on a regular basis.
• Be organized in a fashion that is logical and intuitive to you.
• Is done with enough quality that you would not be opposed to it being a link at another site.

10. Create a web page as you wish and the html elements of the page will be styled by CSS.

XML

1. Write a XML program that will create an XML document which contains your mailing address.

2. Write a XML program that will create an XML document which contains description of three book category.

3. Create an XML document that contains the name and price per pound of coffee beans.
   i) In your XML document mention all properties of XML declaration.
   ii) The root element has name <coffee_bean>
   iii) Create nested elements for different types of coffee.
   iv) Validate the document and if any parsing error is present, fix them.

4. Create an XML document that contains airline flight information.
   i) In your XML document mention all properties of XML declaration.
   ii) The root element has name <airlines>
iii) Create three nested <carrier> elements for three separate airlines. Each element should include a name attribute.
iv) Within each <carrier> nest at least two <flight> ,each of which contains departure_city, destination_ city, fl_no, dept_time.
   v) Validate the document and if any parsing error is present fix them.

5. Create an XML version of your resume. Include elements such as your name and position desired. Nest each of your former employers within an <employer> element. Also, nest your educational experience within an <education> element. Create any other nested elements that you deem appropriate, such as <references> or <spcl_skills> elements.

6. Create a DTD on product catalog.

Multimedia Lab
IT792
Contracts: 3L

Credits- 2

1. Sound capturing & editing using tools like SOUNDFORGE
2. Image editing using tools like Adobe Photoshop
3. Creating/editing motion video/animation clips (using tools like Flash / Adobe Premier)
4. Creation of Content using HTML (basic tags, table form, frame, link to other Image)
5. Creating stylesheet using DHTML
6. Home Page creation using HTML, DHTML.

Books

1. Adobe , Adobe Photoshop 6.0: Classroom in a book Pearson Ed.
2. Anushka Wirasinha , Flash in a Flash- Web Development , PHI
3. Macromedia Flash5 fast and easy Web Development, Design, PHI
4. Castro, HTML4 for the World Wide Web, Pearson Ed.
5. Schurman & Purdi , Dynamic HTML in Action, Second Edition , PHI
6. Lozano, Multimedia- Sound & Video , PHI

E Commerce Lab
IT793A
Contracts: 3L
Credits- 2

Following E-Commerce experiments are to be implemented using either VB, ASP, SQL or JAVA, JSP, SQL.

• Creating E-Commerce Site [3P]: Designing and maintaining WebPages. Advertising in the Website, Portals and Vortals. E-Commerce Interaction [6P]: Comparison Shopping in B2C, Exchanges Handling in B2B, Interaction Examples: Virtual Shopping Carts.

• E-Commerce Applications [6P]: Online Store, Online Banking, Credit Card Transaction Processing.

Books:

1. E-Commerce through ASP by W Clarke- BPB
2. Beginning E-Commerce with VB, ASP, SQL Server 7.0 & MTS by Mathew Reynolds, Wrox Publishers
3. Professional Java Server Programming J2EE 1.3 Edition By Allamaraju et al, SPD.

Soft Computing Lab
IT793B
Contracts: 3L
Credits- 2

In this laboratory the students need to implement the soft computing tools in Matlab. Some exposure in C also can be used for neural network and Genetic Algorithm.

A sample assignment list is given below:

FUZZY LOGIC:

1. Write a Matlab program to implement the different Fuzzy Membership functions.
2. Write a Matlab program to implement Fuzzy set operations and its properties.
3. Write a Matlab code to implement composition of Fuzzy and Crisp Relations.
4. Write Matalab code to implement Fuzzy Information System (develop the system using command line and GUI based Fuzzy toolbox)

Neural network:

5. Write Matlab code to implement McCulloh-Pitts neural network for generate AND, OR functions.
6. Write Matlab code to implement Perceptron learning for particular set of problem.
7. Write Matlab code for OR function with bipolar inputs and targets using Adaline network.
8. Write Matlab code for XOR function with bipolar inputs and targets using Madaline network.
9. Write C program to implement McCulloh-Pitts model to generate AND, OR functions.

Genetic Algorithm

10. Write a Matlab code for maximizing F(x)=x2, , where x ranges from say 0 to 31 using Genetic Algorithm.
11. Use of Genetic Algorithm toolbox in matlab for optimization problem solving.
12. Implantation Simple Genetic Algorithm in C for solving optimization problem.

Image Processing Lab
IT793C
Contracts: 3L
Credits- 2

3. Display of Grayscale Images.
4. Histogram Equalization.
5. Non-linear Filtering.
6. Edge detection using Operators.
7. 2-D DFT and DCT.
8. Filtering in frequency domain.
9. Display of color images.
10. Conversion between color spaces.
11. DWT of images.
12. Segmentation using watershed transform.

VIII Semester

Organisational Behaviour
HU801A
Contracts: 2L
Credits- 2

1. Organizational Behaviour: Definition, Importance, Historical Background, Fundamental Concepts of OB, Challenges and Opportunities for OB. **[2]**
2. Personality and Attitudes: Meaning of personality, Personality Determinants and Traits, Development of Personality, Types of Attitudes, Job Satisfaction. **[2]**
3. Perception: Definition, Nature and Importance, Factors influencing Perception, Perceptual Selectivity, Link between Perception and Decision Making. **[2]**
4. Motivation: Definition, Theories of Motivation - Maslow's Hierarchy of Needs Theory, McGregor's Theory X & Y, Herzberg's Motivation-Hygiene Theory, Alderfer's ERG Theory, McClelland's Theory of Needs, Vroom's Expectancy Theory. **[4]**
5. Group Behaviour: Characteristics of Group, Types of Groups, Stages of Group Development, Group Decision Making. **[2]**
6. Communication: Communication Process, Direction of Communication, Barriers to Effective Communication. **[2]**
7. Leadership: Definition, Importance, Theories of Leadership Styles. **[2]**
8. Organizational Politics: Definition, Factors contributing to Political Behaviour. **[2]**
9. Conflict Management: Traditional vis-a-vis Modern View of Conflict, Functional and Dysfunctional Conflict, Conflict Process, Negotiation – Bargaining Strategies, Negotiation Process. **[2]**
10. Organizational Design: Various Organizational Structures and their Effects on Human Behaviour, Concepts of Organizational Climate and Organizational Culture. **[4]**

References:

1. Robbins, S. P. & Judge, T.A.: Organizational Behavior, Pearson Education, 15th Edn.
2. Luthans, Fred: Organizational Behavior, McGraw Hill, 12th Edn.
3. Shukla, Madhukar: Understanding Organizations – Organizational Theory & Practice in India, PHI
4. Fincham, R. & Rhodes, P.: Principles of Organizational Behaviour, OUP, 4th Edn.
5. Hersey, P., Blanchard, K.H., Johnson, D.E.- Management of Organizational Behavior Leading Human Resources, PHI, 10th Edn.

Or

Project Management
HU801B
Contracts: 2L
Credits- 2

1. Project Management Concepts: Concept and Characteristics of a Project, Importance of Project Management.**[1]**
2. Project Planning: Project Evaluation, Financial Sources, Feasibility Studies. **[4]**

3. Project Scheduling: Importance of Project Scheduling, Work Breakdown Structure and Organization Breakdown Structure, Scheduling Techniques – Gantt Chart and LOB, Network Analysis – CPM/PERT. **[6]**
4. Time Cost Trade-off Analysis – Optimum Project Duration. **[2]**
5. Resource Allocation and Leveling. **[2]**
6. Project Life Cycle. **[2]**
7. Project Cost – Capital & Operating Costs, Project Life Cycle Costing, Project Cost Reduction Methods. **[2]**
8. Project Quality Management: Concept of Project Quality, TQM in Projects, Project Audit. **[1]**
9. Software Project Charateristics and Mangement **[2]**
10. IT in Projects: Overview of types of Softwares for Projects, Major Features of Project Management Softwares like MS Project, Criterion for Software Selection. **[2]**

References

1. Gopalkrishnan P. and Rama Mmoorthy: Text Book of Project Management, Macmillan
2. Nicholas John M.: Project Management for Business and Technology – Principles and Practice, Prentice Hall India, 2nd Edn.
3. Levy Ferdinand K., Wiest Jerome D.: A Management Guide to PERT/CPM with GERT/PDM/DCPM and other networks, Prentice Hall India, 2nd Edn.
4. Mantel Jr., Meredith J. R., Shafer S. M., Sutton M. M., Gopalan M. R.: Project Management: Core Text Book, Wiley India, 1st Indian Edn.
5. Maylor H.: Project Management, Pearson, 3rd Edn.
6. Nagarajan K.: Project Management, New Age International Publishers, 5th Edn.
7. Kelkar. S.A, Sotware Project Management: A concise Study, 2nd Ed., PHI

Advanced Computer Architecture
IT801A
Contracts: 3L
Credits- 3

Computer Architecture and Organization-Review, Fundamentals of Computer Design, Technology Trends Cost Performance Analysis (3L)
Parallel Processing Architectures- Taxonomy- SISD, MISD, SIMD,MIMD, PRAM models (3L)
Data and Resource Dependencies, Program Partitioning and Scheduling, Control Flow vs. Data Flow (3L) Network topologies-Static, Dynamic, Types of Networks (3L)
RISC vs. CISC, Memory Hierarchy, Virtual Memory (4L)
Concepts of Pipelining, Instruction Pipelining, dynamic pipelining, arithmetic pipelines. (4L)
Multiprocessors- Multistage Networks, Cache Coherence, Synchronization, Message- passing (4L)
Vector Processing Principles- Instruction types, Compound, Vector Loops, Chaining (4L)
Array Processors- Structure, Algorithms (3L)
Data Flow Architecture- Graphs. Petri Nets, Static and Dynamic DFA, VLSI Computations (4L) Parallel Programming Models, Languages, Compilers (4L)

Books:

Computer Architecture and Parallel Processing- Kai Hwang and A. .Brigggs International Edition, McGraw Hill
Advanced Computer Architecture: D. Sima, T. fountain, P. Kacsuk, Pearson
Parallel Computer Architecture: D. Culler, J.P.Singh, A.Gupta, Elsevier

Parallel Computing
IT801B
Contracts: 3L
Credits- 3

37L
Module I
Introduction.-Parallel Processing Environment- Pipelining and Data Parallelism, Scalability, Flynn's Taxonomy,. (3L)
Parallel Processing organization- Mesh, Hyper-tree, Pyramid, Butterfly, Hypercube network (4L)
Module II
Parallel Algorithms –Structure, cost, Analysis ;Elementary Algorithms: Broadcast, Prefix sums, All sums (4L) Algorithms

on Selection problem, Merging-Odd-even merging network, CREW Merging, N-ary searching (6L)

Matrix Transposition ,Matrix Multiplications- 2D Mesh SIMD ,Hypercube SIMD, Shuffle-Exchange SIMD models.
Discrete Fourier Transform, Fast Fourier Transform (6L)

Module III

Linear system of equations- Gaussian Elimination, Gauss-Seidel algorithm, Jacobi algorithm (3L)
Sorting – Enumeration sort, Odd-even transposition sort, Bitonic merge
Ellis's Algorithm (3L)

Module IV

Graph Algorithms, Spanning Tree Algorithms, (4L)
Parallel Programming Languages –FORTRAN 90, OCCAM(4L)

Books for reference:

1. Parallel Computing –Theory and Practice -Michael J. Quinn (McGraw Hill Inc.)
2. Design and Analysis of Parallel Algorithms- S.G. Akl (PH)

Natural Language Processing

IT801C

Contracts: 3L

Credits- 3

Module I

Regular Expressions and Automata☹Recap) [**2L**]

Introduction to NLP, Regular Expression, Finite State Automata

Tokenization [**5L**]

Word Tokenization, Normalization, Sentence Segmentation, Named Entity Recognition,

Multi Word Extraction, Spell Checking – Bayesian Approach, Minimum Edit Distance

Morphology [**4L**]

Morphology – Inflectional and Derivational Morphology, Finite State Morphological Parsing, The Lexicon and Morphotactics, Morphological Parsing with Finite State Transducers, Orthographic Rules and Finite State Transducers, Porter Stemmer

Module II

Language Modeling [**4L**]

Introduction to N-grams, Chain Rule, Smoothing – Add-One Smoothing, Witten-Bell Discounting; Backoff, Deleted Interpolation, N-grams for Spelling and Word Prediction, Evaluation of language models.

Hidden Markov Models and POS Tagging [**4L**]

Markov Chain, Hidden Markov Models, Forward Algorithm, Viterbi Algorithm, Part of Speech Tagging – Rule based and Machine Learning based approaches, Evaluation

Module III

Text Classification [**4L]**

Text Classification, Naïve Bayes' Text Classification, Evaluation, Sentiment Analysis – Opinion Mining and Emotion Analysis, Resources and Techniques

Context Free Grammar [**5L**]

Context Free Grammar and Constituency, Some common CFG phenomena for English, Top-Down and Bottom-up parsing, Probabilistic Context Free Grammar, Dependency Parsing

Module IV

Computational Lexical Semantics [**4L**]

Introduction to Lexical Semantics – Homonymy, Polysemy, Synonymy, Thesaurus – WordNet, Computational Lexical Semantics – Thesaurus based and Distributional Word Similarity

Information Retrieval [**5L**]

Boolean Retrieval, Term-document incidence, The Inverted Index, Query Optimization, Phrase Queries, Ranked Retrieval – Term Frequency – Inverse Document Frequency based ranking, Zone Indexing, Query term proximity, Cosine ranking, Combining different features for ranking, Search Engine Evaluation, Relevance Feedback

Books:

1. Speech and Language Processing, Jurafsky and Martin, Pearson Education

2. Foundation of Statistical Natural Language Processing, Manning and Schutze, MIT Press
3. Multilingual natural language Processing Applicationsfrom Theory to Practice: Bikel, Pearson.

Cryptography & Network Security
IT801D
Contracts: 3L
Credits- 3

Total: - 38 Lectures

Module1: Attacks on Computers & Computer Security (5L)

Introduction, Need for Security, Security approaches, Principles of Security, Types of attack.

Module2: Cryptography: Concepts & Techniques (7L)

Introduction, Plaintext & Cipher text, Substitution Techniques, Transposition Techniques, Encryption & Decryption, Symmetric & Asymmetric key Cryptography, Key Range & Key Size

Module3: Symmetric Key Algorithm (8L)

Introduction, Algorithm types & Modes, Overview of Symmetric Key Cryptography, DES(Data Encryption Standard) algorithm, IDEA(International Data Encryption Algorithm) algorithm, RC5(Rivest Cipher 5) algorithm.

Module4: Asymmetric Key Algorithm, Digital Signature and RSA (5L)

Introduction, Overview of Asymmetric key Cryptography, RSA algorithm, Symmetric & Asymmetric key Cryptography together, Digital Signature, Basic concepts of Message Digest and Hash Function (Algorithms on Message Digest and Hash function not required).

Module5: Internet Security Protocols, User Authentication (6L)

Basic Concepts, SSL protocol, Authentication Basics, Password, Authentication Token, Certificate based Authentication, Biometric Authentication.

Module6 : Electronic Mail Security (4L)

Basics of mail security, Pretty Good Privacy, S/MIME.

Module7: Firewall (3L)

Introduction, Types of firewall, Firewall Configurations, DMZ Network Text

:

1. “Cryptography and Network Security”, William Stallings, 2nd Edition, Pearson Education Asia
2. “Network Security private communication in a public world”, C. Kaufman, R. Perlman and M. Speciner, Pearson
3. Cryptography & Network Security: Atul Kahate, TMH.

Reference :

Syllabus for B.Tech(Information Technology) Up to Fourth

1. “Network Security Essentials: Applications and Standards” by William Stallings, Pearson

2. "Designing Network Security", Merike Kaeo, 2nd Edition, Pearson Books
3. "Building Internet Firewalls", Elizabeth D. Zwicky, Simon Cooper, D. Brent Chapman, 2nd Edition, Oreilly
4. "Practical Unix & Internet Security", Simson Garfinkel, Gene Spafford, Alan Schwartz, 3rd Edition, Oreilly

Technology Management
IT802A
Contracts: 3L
Credits- 3
:To be Implemented.

Cyber law and Security Policy
IT802B
Contracts: 3L
Credits- 3

Module – 1A: *Introduction of Cybercrime*: [4]
What is cybercrime?, Forgery, Hacking, Software Piracy, Computer Network intrusion
Module – 1B: *Category of Cybercrime*: [4]
how criminals plan attacks, passive attack, Active attacks, cyberstalking.

Module – 2: *Cybercrime Mobile & Wireless devices:* [8]
Security challenges posted by mobile devices, cryptographic security for mobile devices, Attacks on mobile/cellphones, Theft, Virus, Hacking. Bluetooth; Different viruses on laptop.

Module -3: *Tools and Methods used in Cyber crime:* [8]
Proxy servers, panword checking, Random checking, Trojan Horses and Backdoors; DOS & DDOS attacks; SQL injection: buffer over flow.

Module – 4A: *Phishing & Identity Theft*: [4]
Phising methods, ID Theft; Online identity method.
Module – 4B: *Cybercrime & Cybersecurity*: [4]
Legal aspects, indian laws, IT act, Public key certificate

Text: Cyber security by Nina Gobole & Sunit Belapune; Pub: Wiley India.

Optical Networking
IT802C
Contracts: 3L
Credits- 3
Optical Networks: [36 hours]

Module – 1: [10]

Optical communications - Basics of: [2]
Sources. Transmitters.
Modulators. Optical
fiber. Photodetectors,
and Receivers.

Switching in networks.[2]
Circuit switched.
Packet switched. Cell
switched.
Virtual circuit switched.
Burst switched (fast circuit switched).
Transmission [1]
9. Asynchronous.
10. Synchronous.

Layering in packet switched networks. [2]

12. Motivation.
13. Commonly used abstraction,

Physical layer.
Data link layer.
Network layer.
Transport layer.

Application layer.

Layering in circuit switched networks. [3]

4. Physical layer.
5. Multiplexing standards.
6. Signalling - CAS, CCS.
7. SS7 concept.

Module – 2: [8]

Data plane, management plane, control plane - concept. [1]

First generation networks. [2]

h) SDH/SONET.
i) Computer interconnections - ESCON, Fiber Channel, HIPPI.
j) FDDI.
k) ATM.
l) DQDB.

Components – description. [3]

12. Mode locked laser (for ps pulses).
13. Tunable filters.
14. Multiplexers.
15. Demultiplexers.
16. Tunable wavelength convertors.
17. Optical amplifiers.
    a. Fiber - EDFA.
    b. SOA.
18. Tunable transmitters.
19. Tunable receivers.
20. Dispersion compensating fibers. Multiplexing techniques. [2]
20. SDM.
21. TDMA.
22. WDMA (OFDMA).
    1. DWDM.
    2. SCM.
23. CDMA.

Module – 3 : [9]

Protocols for single channel broadcast networks. (recapitulation) [1]

16. ALOHA, CSMA/CD.
17. Problems with CSMA/CD.
18. Definition of high speed network.

Classification of multiple access methods. (recapitulation) [1]

23. Random access.
24. Reserved acces.
25. Scheduled access.

Multichannel multiple access protocols. [2]

14. Desirable charactersticks of protocol.
    1. Scalability.
    2. Fairness.
15. TTTR.
16. TTFR.
17. FTTR.
18. FTFR.
19. Problem of wavelength stability.

Multihop WDM network. [2]

xiii. Shufflenet.

xiv.MSN.
Wavelength routed networks. [3]
7. Mesh.
8. Ring-Traffic grooming problem.

Module – 4: [9]
IP over Optical framework. [2]
1. ASON.
2. MPëS.

Burst switched network (bufferless networks) [1] All-optical circuit switches. [1]
All-optical packet switches. [3]
3. Broadcast and select.
4. Wavelength routed.
5. Space switch based.
6. Discussion on various switch architectures.
7. Packet buffering techniques.
8. Travelling type.
9. Recirculating type.

Protection and restoration. [2]
6. Restoration mechanism.
7. Restoration timing issues.
8. Path protection.
9. Span protection.
10. P-cycles.

Text:
References:
1. WDM Networks: Biswanath Mukherjee.
2. Optical Networks - A Practical Perspective: Rajiv Ramaswamy & Kumar Sivarajan.

Low Power Circuits & Systems
IT802D
Contracts: 3L
Credits- 3

Basics of MOS circuits: MOS Transistor structure and device modeling; MOS Inverters; MOS Combinational Circuits – Different Logic Families

Sources of Power dissipation: Dynamic Power Dissipation: Short Circuit Power; Switching Power; Gliching Power: Static Power Dissipation

Supply Voltage Scaling Approaches: Device feature size scaling; Multi-Vdd Circuits; Architectural level approaches: Parallelism, Pipelining; Voltage scaling using high-level transformations; Dynamic voltage scaling; Power Management.

Switched Capacitance Minimization Approaches: Hardware Software Tradeoff; Bus Encoding; Two's complement Vs Sign Magnitude; Architectural optimization; Clock Gating; Logic styles

Leakage Power minimization Approaches: Variable-threshold-voltage CMOS (VTCMOS) approach; Multi-threshold-voltage CMOS (MTCMOS) approach ; Dual-Vt assignment approach (DTCMOS); Transistor stacking.

Special Topics: Adiabatic Switching Circuits; Battery-aware Synthesis; Variation tolerant design
References:
1. Sung_Mo Kang, Yusuf Leblebici, CMOS Digital Integrated Circuits, Tata McGraw Hill
2. Neil H. E. Weste and K. Eshraghian, Principles of CMOS VLSI Design, 2nd Edition, Addison Wesley (Indian reprint).
3. A. Bellamour, and M. I. Elmasri, *Low Power VLSI CMOS Circuit Design*, Kluwer Academic Press, 1995
4. Anantha P. Chandrakasan and Robert W. Brodersen, Low Power Digital CMOS Design, Kluwer Academic Publishers, 1995
5. Kaushik Roy and Sharat C. Prasad, Low-Power CMOS VLSI Design, Wiley-Interscience, 2000

Syllabus for B.Tech(Information Technology) Up to Fourth

Business Analytics
IT802E
Contracts: 3L
Credits- 3

Total: - 38 Lectures

Module 1: Foundations of Business Analytics (4L)
Introduction to Business Analytics, Analytics on Spreadsheets.

Module 2: Product-Market Fit: Gap Analysis (6L)
Gap Analysis, Carrying Out Gap Analysis, Steps in Gap Analysis, Conducting a Representative Survey for Gap Analysis, Predicting Consumer Behaviour and Gap Analysis in Smartphone Market.

Module 3: Analytical Modeling by Factor and Cluster Analysis (8L)
Factor Analysis Concepts, Application of Factor Analysis
Concepts of Cluster Analysis, Similarity Measures, Application of Cluster Analysis.

Module 4: Analytical Modeling by Logistics Regression and Discriminant Analysis (10L)
Linear Discriminant Analysis Model, Predictive Modeling using Discriminant Analysis, Application of Linear Discriminant Analysis for Credit Scoring of Loan Applicants.
Theoretical Formulation of Logistics Regression, Mathematical Interpretation of Logistics Regression, Indicator for Model Fit, Applying Logistics Regression,
Application of Logistics Regression in Predicting Risk in Portfolio Management
Testing the Reliability/Consistency of the Different Factors Measured.

Module 5: Segmentation of primary target market by Heuristic Modeling (4L)
Introduction to RFM Analysis
Enhancing Response Rates with RFM Analysis.

Module 6: Segmentation of target market based on large databases using Decision Tree approach. (6L)
Introduction to Chi-square Automatic Interaction Detection (CHAID)
Predictive Modelling by CHAID.

Text:
1. “Business Analytics: An Application Focus”, Purba Halady Rao, Prentice Hall.
2. "Business Analytics" James R. Evans, Pearson.

Reference:
1. "Modeling Techniques in Predictive Analytics", Thomas W. Miller, Pearson
2. "Enterprise Analytics: Optimize Performance, Process, and Decisions Through Big Data", Thomas H. Davenport, Pearson.
3. "Fundamentals of Business Analytics", Seema Acharya, Wiley India.
4. "Business Intelligence: A Managerial Perspective on Analytics", Ramesh Sharda, Dursun Delen, Efraim Turban, David King, Prentice Hall

Robotics
IT802F
Contracts: 3L
Credits- 3

No	Topic	Number of Lectures
	Module 0: Preface, Information for Students and Teachers, Acknowledgement	
1	**Module 1: Introduction**	1
	Introduction -- brief history, types, classification and usage, Science and Technology of robots, Some useful websites, textbooks and research journals.	
2	**Module 2: Elements of robots – links, joints, actuators, and sensors**	5

	Position and orientation of a rigid body, Homogeneous transformations, Representation of joints, link representation using D-H parameters, Examples of D-H parameters and link transforms, different kinds of actuators – stepper, DC servo and brushless motors, model of a DC servo motor, Types of transmissions, Purpose of sensors, internal and external sensors, common sensors – encoders, tachometers, strain gauge based force-torque sensors, proximity	

	and distance measuring sensors, and vision.	
3	**Module 3: Kinematics of serial robots**	4
	Introduction, Direct and inverse kinematics problems, Examples of kinematics of common serial manipulators, workspace of a serial robot, Inverse kinematics of constrained and redundant robots, Tractrix based approach for fixed and free robots and multi-body systems, simulations and experiments, Solution procedures using theory of elimination, Inverse kinematics solution for the general 6R serial manipulator.	
4	**Module 4: Kinematics of parallel robots**	5
	Degrees-of-freedom of parallel mechanisms and manipulators, Active and passive joints, Constraint and loop-closure equations, Direct kinematics problem, Mobility of parallel manipulators, Closed-from and numerical solution, Inverse kinematics of parallel manipulators and mechanisms, Direct kinematics of Gough-Stewart platform.	
5	**Module 5: Velocity and static analysis of robot manipulators**	5
	Linear and angular velocity of links, Velocity propagation, Manipulator Jacobians for serial and parallel manipulators, Velocity ellipse and ellipsoids, Singularity analysis for serial and parallel manipulators, Loss and gain of degree of freedom, Statics of serial and parallel manipulators, Statics and force transformation matrix of a Gough-Stewart platform, Singularity analysis and statics.	
6	**Module 6: Dynamics of serial and parallel manipulators**	4
	Mass and inertia of links, Lagrangian formulation for equations of motion for serial and parallel manipulators, Generation of symbolic equations of motion using a computer, Simulation (direct and inverse) of dynamic equations of motion, Examples of a planar 2R and four-bar mechanism, Recursive dynamics, Commercially available multi-body simulation software (ADAMS) and Computer algebra software Maple.	
7	**Module 7: Motion planning and control**	6
	Joint and Cartesian space trajectory planning and generation, Classical control concepts using the example of control of a single link, Independent joint PID control, Control of a multi-link manipulator, Non-linear model based control schemes, Simulation and experimental case studies on serial and parallel manipulators, Control of constrained manipulators, Cartesian control, Force control and hybrid position/force control, Advanced topics in non-linear control of manipulators.	
8	**Module 8: Modeling and control of flexible robots**	4
	Models of flexible links and joints, Kinematic modeling of multi-link flexible robots, Dynamics and control of flexible link manipulators, Numerical simulations results, Experiments with a planar two-link flexible manipulator.	
9	**Module 9: Modeling and analysis of wheeled mobile robots**	3
	Introduction and some well known wheeled mobile robots (WMR), two and three-wheeled WMR on flat surfaces, Slip and its modeling, WMR on uneven terrain, Design of slip-free motion on uneven terrain, Kinematics, dynamics and static stability of a three-wheeled WMR's on uneven terrain, Simulations using Matlab and ADAMS.	
10	**Module 10: Selected advanced topics in robotics**	3
	Introduction to chaos, Non-linear dynamics and chaos in robot equations, Simulations of planar 2 DOF manipulators, Analytical criterion for unforced motion. Gough-Stewart platform and its singularities, use of near singularity for fine motion for sensing, design of Gough-Stewart platform based sensors. Over-constrained mechanisms and deployable structures, Algorithm to obtain redundant links and joints, Kinematics and statics of deployable structures with pantographs or scissor-like elements (SLE's).	

Practical

Design Lab
CS891
Contracts: 6

Syllabus for B.Tech(Information Technology) Up to Fourth

Credits- 4

Syllabus for B.Tech(Information Technology) Up to Fourth

The Spoken tutorials are designed by IIT-Bombay and promoted by MHRD, GoI, to make the students industry ready. These tutorials can be organised in Colleges and promoted among students. The tutorials followed by practice will enable the students to handle problems. After 2-3 weeks of practice there is a scope for evaluation and certification.

Please visit the website for details. http://www.spoken-tutorial.org

Any three topics from the following may be can be chosen:

1. C and C++ ; Basic and Intermediate Levels

2. Advanced C++

3. Java and Netbeans

4. Java Business Application

5. PHP & MySQL

6. Python

7. Scilab

8. Linux and Ubuntu

Director
Sikkim Institute of Technology

2	**Solar Energy:** Solar radiation - beam and diffuse radiation, solar constant, earth sun angles, attenuation and measurement of solar radiation, local solar time, derived solar angles, sunrise, sunset and day length. flat plate collectors, concentrating collectors, Solar air heaters-types, solar driers, storage of solar energy-thermal storage, solar pond , solar water heaters, solar distillation, solar still, solar cooker, solar heating & cooling of buildings, photo voltaics - solar cells, different types of PV Cells, Mono-poly Crystalline and amorphous Silicon solar cells. Design of PV array. Efficiency and cost of PV systems & its applications. PV hybrid systems.	0
3	**Wind Energy:** Principle of wind energy conversion; Basic components of wind energy conversion systems; wind mill components, various types and their constructional features; design considerations of horizontal and vertical axis wind machines: analysis of aerodynamic forces acting on wind mill blades and estimation of power output; wind data and site selection considerations	0
4	**Energy from Biomass:** Biomass conversion technologies, Biogas generation plants, classification, advantages and disadvantages, constructional details, site selection, digester design consideration, filling a digester for starting, maintaining biogas production, Fuel properties of bio gas, utilization of biogas	0
5	**Geothermal Energy:** Estimation and nature of geothermal energy, geothermal sources and resources like hydrothermal, geo-pressured hot dry rock, magma. advantages, disadvantages and application of geothermal energy, prospects of geothermal energy in India.	0
6	**Energy from Ocean:** Ocean Thermal Electric Conversion (OTEC) systems like open cycle, closed cycle, Hybrid cycle, prospects of OTEC in India. Energy from tides, basic principle of tidal power, single basin and double basin tidal power plants, advantages, limitation and scope of tidal energy. Wave energy and power from wave, wave energy conversion devices, advantages and disadvantages of wave energy.	0
7	**Magneto Hydrodynamic power generation:** Principle of MHD power generation, MHD system, Design problems and developments, gas conductivity, materials for MHD generators and future prospects.	0
8	**Hydrogen Energy:** Introduction, Hydrogen Production methods, Hydrogen storage, hydrogen transportation, utilization of hydrogen gas, hydrogen as alternative fuel for vehicles.	03
9	**Fuel cell:** Introduction, Design principle and operation of fuel cell, Types of fuel cells, conversion efficiency of fuel cell, application of fuel cells	0

First Semester: 8 Compulsory Courses

Code	Course Name	No. of Credits	Contact Hours	Marks
MB 101	**Business Economics I**	4	40	100
MB 102	**Business Communication**	4	40	100
MB 103	**Management Information Systems I**	4	40	100
MB 104	**Organizational Behaviour I**	4	40	100
MB 105	**Quantitative Methods I**	4	40	100
MB 106	**Fundamentals of Accounting**	4	40	100
MB 107	**ISS & VA***	4	40	100
MB 108	**Business Laws**	4	40	100
	Total	**32**	**320**	**800**

- **ISS – Indian Social Structure; VA – Values & Ethics in business**

MASTER OF BUSINESS ADMINISTRATION(MBA) Revised & Final Syllabus for the Batch starting from the Academic Year

Second Semester: 8 Compulsory Courses

Code	Course Name	No. of Credits	Contact Hours	Marks
MB 201	**Business Economics II**	4	40	100
MB 202	**Organizational Behaviour II**	4	40	100
MB 203	**Quantitative Methods II**	4	40	100
MB 204	**Production & Operations Management**	4	40	100
MB 205	**Management Information Systems II**	4	40	100
MB 206	**Human Resource Management**	4	40	100
MB 207	**Financial Management**	4	40	100
MB 208	**Marketing Management**	4	40	100
	Total	**32**	**320**	**800**

Third Semester: 2 Compulsory, 4 Specialization Courses and Project Work

Code	Course Name	No. of Credits	Contact Hours	Marks
MB 301	**Management Accounting**	4	40	100
MB 302	**Operations Research**	4	40	100
MB 303	**Project Work & Viva Voce**	8	-	100
Specialization	**Four courses – three from one specialization and one from another specialization**	16	160	400
	Total	**32**	**240**	**700**

-

Specialization:

Code	Course Name	Code	Course Name
MM 301	**SALES & DISTRIBUTION MANAGEMENT**	**SM 301**	**DATABASE MANAGEMENT**
MM 302	**ADVERTISING & SALES PROMOTION**	**SM 302**	**SYSTEM ANALYSIS & DESIGN**
MM 303	**MARKETING RESEARCH**	**SM 303**	**COMPUTER AIDED MANAGEMENT**
FM 301	**CORPORATE TAXATION & TAX PLANNING**	**HR 301**	**EMPLOYMENT & COMPENSATION ADMINISTRATION**
FM 302	**CORPORATE FINANCE**	**HR 302**	**HUMAN RESOURCE PLANNING**
FM 303	**SECURITY ANALYSIS & PORTFOLIO MANAGEMENT**	**HR 303**	**LABOUR LAWS**
HSA301	**CONCEPT OF COMMUNITY HEALTH**	**SD 301**	**Business Environment and Sustainable Development**
HSA302	**EPIDEMIOLOGY & ANALYSIS OF HEALTHCARE INFORMATION DATA**	**SD 302**	**System Approach to Sustainable Development**
HSA303	**HEALTH POLICY & NATIONAL HEALTH PROGRAMME**	**SD 303**	**Sustainable Development in the context of Human Development**
SHM 301	**Shipping Practice**	**PLM 301-**	**International Transport Systems**
SHM 302	**Commercial & Shipping Law**	**PLM 302**	**– Port / Shipping / Labour Laws**
SHM 303	**Shipping Economics & e-Business**	**PLM 303**	**– Port Operation Management**

MASTER OF BUSINESS ADMINISTRATION(MBA) Revised & Final Syllabus for the Batch starting from the Academic Year

Fourth Semester: 2 Compulsory, 4 Specialization Courses and Project Work

Code	Course Name	No. of Credits	Contact Hours	Marks
MB 401	**Project Management & Entrepreneurship Development**	4	40	100
MB 402	**Strategic Management**	4	40	100
MB 403	**Comprehensive Viva Voce**	8	-	100
Specialization	**Four courses – three from one specialization and one from another specialization**	16	160	400
	Total	**32**	**240**	**700**

Specialization:

Code	Course Name	Code	Course Name
MM 404	**INTERNATIONAL MARKETING**	**SM 404**	**SOFTWARE MANAGEMENT**
MM 405	**SERVICE MARKETING**	**SM 405**	**E - BUSINESS**
MM 406	**CONSUMER BEHAVIOUR**	**SM 406**	**FUNDAMENTALS OF NETWORKING**
FM 404	**FINANCIAL INSTITUTES AND MARKETS.**	**HR 404**	**INDUSTRIAL RELATIONS**
FM 405	**INTERNATIONAL FINANCE**	**HR 405**	**ORGANIZATIONAL DEVELOPMENT**
FM 406	**DERIVATIVES AND RISK MANEGEMENT**	**HR 406**	**HUMAN RESOURCE DEVELOPMENT**
HSA404	**LAW**	**SD 404**	**Sustainable livelihood for sustainable development**
HSA405	**PLANNING, ORGANIZING & MANAGEMENT OF HEALTH SERVICE**	**SD 405**	**Agribusiness for sustainable development**
HSA406	**LOGISTICS MANAGEMENT IN HEALTH CARE UNITS & STORAGE & DISTRIBUTION**	**SD 406**	**Participatory approaches, research methods for sustainable development**
SHM 401	**Ship Operation Management**	**PLM 401**	**Commercial Shipping**
SHM 402 –	**Maritime Financial Management**	**PLM 402**	**Cargo Handling Systems Management**
SHM 403 –	**Maritime HR Management**	**PLM 403**	**Port Modernization & Traffic Forecasting**

MASTER OF BUSINESS ADMINISTRATION(MBA) Revised & Final Syllabus for the Batch starting from the Academic Year

1st Semester

WBUT/MBA/ Ist Sem (4 Credit : 40 hrs)

[MB – 101] : Business Economics-I

(MANAGERIAL ECONOMICS)

Chapter 1 : Introduction to Managerial Economics

Managerial Decision Making and Economic Theory, Goals of the firm: Measuring and Maximising Economic Profit, Economic Cost of Using Resources, Economic Profit versus Accounting Profit, Other Goals (Value Maximisation, Revenue Maximisation etc.), Forms of Business Organisation, Separation of Ownership and Control, Pricing decisions under Risk and Uncertainty, The Principal-Agent Problem, Asymmetric Information, Moral Hazard and Adverse Selection. (4L)

Chapter 2 : Demand Analysis

(A) Demand Functions - Law of Demand, Explaining the law of demand, Violations of the Law of Demand, Shifts in Demand; Elasticity of Demand: Price Elasticity (at a point and over and interval), Factors affecting price elasticity, Price elasticity and Change in Total Revenue, AR, MR and Price elasticity, Range of Values of Price Elasticity; Income Elasticity, Inferior, Superior and Normal goods, Income Elasticity and Share in Total Expenditure; Cross-Price Elasticity, Substitutes and Complements; (5L)

(B) Introduction to methods of demand estimation (2L)

(C) * #Indifference curves, budget line and consumer equilibrium, ICC, PCC (idea only) (2L)

Chapter 3 : Production and Cost Analysis

(A) Production Function, Short Run and Long Run, Production with One Variable Input, Total Product, Average and Marginal Products, Law of Variable proportions, Relationship between TP, AP and MP. (4L)

(B) Short Run Costs of Production, Fixed and Variable Costs, Short Run Total, Average and Marginal Cost and Relationship between them, Short Run Cost Curves, Relationship between AVC, MC, AP and MP; Long run cost curves, Relationship between LAC and SAC, Economies of Scale and Scope, (3L)

(C) Production with Two Variable Inputs, Isoquants – Characteristics, Marginal Rate of Technical Substitution, Laws of Returns to Scale, Isocost Curves, * # Finding the Optimal Combination of Inputs, Production of a given output at Minimum Cost, Production of Maximum Output with a given level of Cost, Expansion Path, Finding the Long Run Cost Schedules from the Production Function, (4L)

(D) Law of supply, elasticity of supply, market equilibrium, changes in equilibrium. (2L)

Chapter 4 : Managerial Decision Making under Alternative Market Structures

(A) Characteristics of Perfect Competition, #Profit Maximisation in Competitive Markets, Output Decision in the Short Run, Shut Down Point, Short Run Supply for the Firm and Industry; Output Decision in the Long Run, Break Even Point, Long Run Supply for the Perfectly Competitive Industry, Profit Maximising Input Usage under Competitive Conditions; (3L)

(B) Profit Maximisation under Monopoly, Output and Pricing Decisions in the Short and Long Run, (2L)

(C) Short and long run equilibrium under monopolistic competition (1L)

(D) Interdependence of strategic decision making – oligopoly, Collusion – cartels, price leadership. (2L)

Chapter 5 : Pricing Decisions

Price Discrimination under Monopoly, Average Cost Pricing, Marginal cost pricing, Peak Load Pricing, Limit Pricing, Multi-product Pricing, Transfer Pricing. (5L)

Chapter 6: Externalities and Market Failure

Understanding externalities and market failures, pricing under market failure (2L)

References for Business Economics – I

Damodaran, Suma – Managerial Economics – Oxford University Press

Hirschey, Mark – Economics for Managers – Thomson South-Western
Lipsey & Chrystal - Economics(Eleventh Edition) – Oxford University Press

Maddala & Miller -Micro Economics – Theory & Applications(International Edition) – Tata McGraw Hill
Maurice & Thomas –Managerial Economics – Tata McGraw Hill
Peterson & Lewis – Managerial Economics – Prentice Hall of India Pvt. Ltd. /Pearson Education.
Pindyck and Rubenfeld (Sixth Edition) - Micro Economics – Prentice Hall of IndiaPvt. Ltd/Pearson Education
Salvatore, Dominick - Managerial Economics in a Global Economy –Oxford University Press -

Salvatore, Dominick - Micro Economics – Theory & Applications(Fourth Indian Edition) – Oxford University Press
Samuelson & Nordhaus – Economics(Sixteenth Edition) - Tata McGraw Hill
Sen, Anindya - Micro Economics – Theory & Applications – Oxford University Press

* both numerical and graphical methods to be discussed # Only basic idea on second order condition required.

WBUT/MBA/ I st Sem (4 Credit : 40 Hrs)

[MB 102]: BUSINESS COMMUNICATION

Module – I (20 hrs)

1. **Principles of Communication** – Definition, Purpose, Process, Types [2L]

2. **Verbal Communication** – Target group profile, Barriers of Communication, Listening, Feedback, Presentation Skills, Use of Aids, Public Speaking, Practice Presentation, Non Verbal Communication [6L+ 6p]]

3. **Written Communication** – Stages of Writing, Composing Business Messages, Preparing Notes, Style, Punctuation, Using simple words, Proof Reading. [4L]

4. **Report Writing** – Report Planning, Types of Reports, Developing an outline, Nature of Headings, Ordering of Points, Logical Sequencing, Graphs, Charts, Executive Summary, List of Illustration, Report Writing. [2L]

Module – II (20 hrs)

5. **Internal Communication –** Circulars, Notices, Memos, Agenda and Minutes [4L + 2P]

6. **External Communication –** Resume/CV, Using Facsimiles (Fax), Electronic Main, Handling Mail [4 L]

7. **Writing Business Letters** – Formats, Styles Types – Request, Enquiry, Placing Order, Instruction, Action, Complaint, Adjustment, Sales, Reference, Good News & Bad News, Acknowledgement [2L + 4P]

8. **Handling Business Information** – Annual Report, House Magazine, Press Release, Press Report . [2 L + 2P]

Readings

Blundell J. A & Middle N. M. G.: Career – English for the Business and Commercial World, Oxford University Press. .

Kaul , Asha - Effective Business Communication, Prentice Hall.

Raman, M & Singh, P - Business Communication, OUP

Rizvi, M. Ashraf - Effective Technical Communication, Tata McGraw Hill

Taylor, Shirley - Communication for Business, 4th Edn.-Pearson Education.

MASTER OF BUSINESS ADMINISTRATION(MBA) Revised & Final Syllabus for the Batch starting from the Academic Year

(4 Credit : 40 hrs)

[MB-103]: Management Information Systems-I

[Information Technology applications in Business]

[1] Information Technology concepts: [4L]
Data v. information, Classification of hardware and software
System software & Application software, open source software
Operating system concepts
IT resources.

[2] Systems concepts: [10L]
Systems, components of a system, interfaces & boundaries, environment of a system
Types of Systems
Information system as a system, CBIS
Types of CBIS (brief descriptions and their interrelationships/hierarchies):
Office Automation System(OAS), Transaction Processing System(TPS),
Management Information System(MIS), Decision Support Systems (DSS),
Executive Information System(EIS),
Knowledge based system, Expert system.
Systems Development Life cycle(SDLC)
Life cycle models: Waterfall model, Prototyping model, Spiral model

[3] Office Automation: [12P]
[a] Word Processing software (e.g. MS-Word/openoffice.org)
Creating and editing documents.
Mail merge.

[b] Spreadsheet application (e.g. MS-
Excel/openoffice.org) Creating and editing spreadsheets.
Drawing charts.
Using Functions: text, math & trig, statistical, date & time, database, financial, logical, information
Data analysis – sorting data, filtering data (AutoFilter , Advanced Filter),
data validation, what-if analysis (using data tables/scenarios),
creating sub-totals and grand totals, pivot table/chart,
goal seek/solver.

[c] Presentation software (e.g. MS-
Powerpoint) Creating and editing
presentations.
Applying slide background, images,etc.
Adding slide transition effect, animation effects, slide timings.

[d] Email

[4] Data communication & Networking [4L]
[a] Need for computer networking, components of a data communication
system, direction of data flow(simplex, half-duplex, full-duplex)
[b] Types of networks: LAN, MAN, WAN; concepts of Internet, Intranet,
Extranet, WWW.
[c] Network topology, transmission media.
[d] Applications of networking in business and society: email, social networking, telemedicine, etc.

[5] E-commerce / E-business [4L]
[a] Overview, Definitions, Advantages & Disadvantages of E-commerce
[b] Business models of e-commerce: models based on transaction party (B2B, B2C,B2G,
C2B, C2C, E-Governance), models based on revenue models
[c] Risks of e-commerce and security measures

[6] Threats to Computer systems and control measures [3L]
Concepts of threats: Virus, hacking, phishing, spyware, spam, physical threats (fire, flood, earthquake, vandalism).
Concepts of security measures: firewall, encryption.

[7] Real Time Application in Business : [3L]
Types of Real Time Systems, Distinction between Real Time, On – line and Batch Processing System. Real Time Applications

viz. Railway / Airway / Hotel Reservation System, ATMs, EDI Transactions - definition, advantages, examples; Electronic Fund Transfer (EFT).

Suggested Readings

Bharat, Bhaskar : Electronic Commerce - Technologies & Applications. TMH
Forouzan : Data Communication & Networking, TMH.
ISRD, Structured System Analysis and Design, Tata McGraw Hill
Joseph, P.T. : E-commerce An Indian Perspective, PHI
Pressman, Roger : Software Engineering - A Practitioner's Approach , TMH
Rajaraman V., Systems Analysis and Design, PHI
Sommerville : Software Engineering-Pearson Education.
Tanenbaum : Computer Networks, Pearson Education
Taxali, R. K. : I.T. Tools & Applications , TMH
Westland & Clark : Global Electronic Commerce, Universities Press

MBA Revised & Final Syllabus'2008(For the Batch starting from Academic year

WBUT/MBA/ I st Sem
(4 Credit : 40 hrs)

[MB –104]: ORGANIZATIONAL BEHAVIOUR – I

Module – I (20 hrs)

1. **OB – Overview** – Meaning of OB, Importance of OB, Field of OB, Contributing Disciplines, Applications in Industry. [2 L]

2. **Organization Theory –** Classical Theories : Scientific Management, Administrative Principles, Theory of Bureaucracy; Human Relations Approach; Modern Theories : Systems Approach, Contingency Approach, Quantitative Approach, Behavioural Approach [10 L]

3. **Work Motivation** – Approaches to Work Motivation, Theories of Motivation – Maslow's Hierarchy of Need Theory, Alderfer's ERG Theory, Herzberg's Motivation-Hygiene Theory, McClelland's Achievement – Motivation Theory, McGregor's Theory X & Y, Vroom's Expectancy Theory, Porter and Lawler Expectancy Model. [8 L]

Module – II (20 hrs)

4. **Personality and Individual Differences** – Meaning of Personality, Determinants of Personality, Theories of Personality, Measurement of Personality, Development of Personality. [6 L]

5. **The Process of Perception** – Process and Principles, Nature and Importance, Factors Influencing Perception, Perceptual Selectivity, Making Judgements, Social Perception. [4 L]

6. **Learning** – Concepts and Principles, Theories of Learning, Types, Techniques of Administration, Reinforcement, Punishment, Learning about Self. [4 L]

7. **Attitudes and Job Satisfaction** – Sources of Attitudes, Types of Attitudes, Attitudes and Consistency, Cognitive Dissonance Theory, Attitude Surveys. [4 L]

8. **Work Stress** – Understanding Stress, Potential Sources of Stress, Consequences of Stress, Managing Stress. [2 L]

Readings

Daft, R.L. : Organisational Theory and Design, Thomson

Fincham, R & Rhodes, P. : Principles of Organizational Behaviour, OUP

Hellriegel, D. Slocum Jr JW. , Woodman RW : Organizational Behaviour, Thomson

Luthans, Fred : Organizational Behaviour, McGraw Hill

Newstrom J. W. & Davis K. : Organizational Behaviour, McGraw Hill.

Robbins, S. P., Judge, T.A. & Sanghi, S. : Organizational Behaviour, Pearson

Shukla, Madhukar : Understanding Organizations – Organizational Theory & Practice in India, Prentice Hall

WBUT/MBA/1st Sem
(4 Credit = 40 hours)

[MB-105]: QUANTITATIVE METHODS – 1

(Mathematics & Descriptive Statistics)

Module I (Mathematics)

1. Set theory – Concepts and business applications [3L]

2. Functions – basic concepts, different types and applications [2L]
3. Derivatives (single variable) – basic working rules; applications to optimization problems and curve sketching [5L]
4. Partial derivatives – basic working rules and applications to optimization [2L]
5. Constrained optimization – use and interpretation of the Lagrange multiplier [2L]
6. Fundamentals of convexity and concavity and idea about their usage [2L]
7. Concept of integration and working rules; application to business and economic problems [4L]
8. Matrices and their applications [2L]
9. Combinatorics – Principles of counting; Permutations and Combinations; Inclusion-Exclusion principle [3L]
10. Probability and its applications in business and economics

[3L] Module II (Descriptive Statistics)

1. Scope, functions and limitations of statistics [1L]
2. Collection and presentation of data – Tabular and diagrammatic representation, Frequency distribution, relative frequency,cumulative frequency; Bar graphs and pie charts; Histogram, Ogive. [2L]

3. Measures of Central tendency – Mean, Median, Mode, Percentiles, Quartiles [2L]
4. Measures of Dispersion – Range, Interquartile range, Mean deviation, Mean Absolute deviation, Standard deviation, Variance, Coefficient of Variation. [3L]
5. Measures of shape and relative location; Skewness and Kurtosis; Chebyshev's Theorem [1L]
6. Simple correlation and regression analysis [3L]

Suggested Readings

Aczel – Complete Business Statistics (6th edition); TMH

Anderson, Sweeny and Williams – Statistics for Business and Economics (9th edition); Thomson Learning

Anthony, M. and Biggs, N. – Mathematics for Economics and Finance: Methods and Modeling; CUP

Dowling, E.T. – Introduction to Mathematical Economics; Schaum's Outline Series

Hoy Michael et.al. - Mathematics for Economics(2nd edition); PHI

Raghavachari, M– Mathematics for Management; TMH

Sharma, J.K - Business Statistics, Pearson Education.

WBUT/MBA/ I st Sem (4 Credit : 40 Hrs)

[MB-106]: Fundamentals of Accounting

Module – I (Financial accounting)

1. **Introduction to Financial Accounting –** Concepts – Conventions – Importance and scope – Accounting Principles – Double entry system – Brief overview of accounting cycle – introduction to Balance Sheet and Income Statement **10L**

2 **Accounting for Fixed assets** – Introduction – Valuation of Fixed assets – principles and norms of standard accounting treatment (AS 10) **4L**

3 **Depreciation –** Methods – Accounting – Importance **2L**

4 **Revenue Recognition** - Introduction -Definitions -Sale of Goods -Rendering of Services -The Use by Others of Enterprise Resources Yielding Interest-Royalties and Dividends -Effect of Uncertainties on Revenue Recognition - accounting standard (AS 9) **4L**

5. **Provisions** – Doubtful Debt – Bad Debt – Importance – Provisions – Reservations – Accounting Treatments **2L**

6. **Financial Statements –** Introduction to Corporate Final Accounts as per Schedule VI of Companies Act 1956 Income Statement – Interpretation of Annual Reports.
2L

Module – II(Cost accounting)

1. **Cost Accounting** : key terms, cost concepts, classifications, total cost components, cost accounting and management accounting, cost accounting and financial accounting.
6L

[6 L]

2. **Elements of Cost** : Materials (Purchasing, Storekeeping, Issue, Pricing & Control); Labour (Costing & Control) ; Overheads (Analysis, Distribution and Control, Treatment of Special Items).
10L

Readings: Module I Text:

Bhattacharyya, Ashis K.: Financial Accounting for Business Managers, PHI

Gupta: Financial Accounting for Management, Pearson education

Narayanaswamy, R : Financial Accounting, PHI

Ramchandran, Kakani: Financial Accounting for managers, Tata McGraw-Hill

Shah : Basic Financial Accopunting For management, OUP

Reference:

Anthony, Hawkins, Merchant: Accounting:Text & Cases, McGraw-Hill International

Horngren, Sundem, Elliot: Introduction to Fianacial Accounting, Pearson Education
Weygandt, Kieso, Kimmel: Financial Accounting, Wiley

Module II
Text:

Banerjee, Bhabatosh - Cost Accounting : Theory and Practice, PHI, 12th edition, 2007

Bhattacharyya, Ashis K - Principles and Practice of Cost accounting, PHI

Jain ,S. P. & Lall Nigam, B M : Cost Accounting : Principles & Practice, PHI

Reference:

Horngren, Dattar, Foster: Cost Accounting, Pearson education

WBUT/MBA/ I st Sem
(4 Credit : 40 hrs)

[MB-107]: INDIAN SOCIAL STRUCTURE AND VALUES & ETHICS IN BUSINESS

Module - I (20 hrs)

1. **Nature and Types of Indian Society** - Demographic Profile (Population, Language, Religion, Culture), Agrarian Society, Industrial Society, Tribal Society.
   [4L]

2. **Social Stratification** - Caste System, Class Structure, Minority Groups, Scheduled Caste/Tribe, Other Backward Communities, Weaker Sections. [4L]

3. **Socio-Economic Problems** - Population, Poverty, Illiteracy, Unemployment, Child Labour, Alcoholism, Narcotic addiction, Occupational Disease, Malnutrition, Insurgency, Terrorism, Crime, Project Affected Persons. [4L]

4. **Industrialism and Social Change** - Effects on Community, Impact on Family Structure and Roles of Male & Female, Family Economy, Child Care, Aged in the Family, Quality of Life. [4L]

5. **Social Integration** - Constitutional Safeguards, Legal Approach, Inequality Removal Programmes, Voluntary Approach by NGOs, Role of Politicians, Role of Govt, Role of Business Houses, Rural Development Programmes, International Neighbours, Rehabilitation and Resettlement of Project Affected Persons. [4L]

Module - II (20 hrs)

6. **Values** - Importance, Sources of Value Systems, Types, Values, Loyalty and Ethical Behaviour, Values across Cultures. [2L]

7. **Business Ethics** - Nature, Characteristics and Needs, Ethical Practices in Management. [2L]

8. **Indian Values and Ethics** - Respect for Elders, Hierarchy and Status, Need for Security, Non - Violence, Cooperation, Simple Living high Thinking, Rights and Duties, Ethics in Worklife, Attitudes and Beliefs. [6L]

9. **Corporate Social Responsibility (CSR)** - Obligations under Law, Environmental Protection, Fair Trade Practices, Health and Well-being of Under-privileged People, Social Welfare and Community Development Activities . [6L]

10. **Ethics and Corporate Excellence** - Code of Ethics in Business, Strategies of Organizational Culture Building, Customer Care, Care of the Employees as per Statutes. [4L]

Readings

Beteille, Andre - Society and Politics in India, OUP

Chakraborty, S. K. - Values and Ethics for Organisations,

OUP Fernando, A.C. - Business Ethics - An Indian

Perspective, Pearson Gupta, Dipankar - Social

Stratificaiton, OUP.

NCERT - Text Book on Indian Society

Srinivas, M. N.- Social Structure and Caste and Other Essays, OUP.

WBUT/MBA/I st Sem (4Credit : 40 hrs)

MB-108 :
BUSINESS LAWS
Module – I (20 hrs)

1. ***Concept of Law*** - Society, State and Law, Enforcebility of Law, Mercantile Law. [4L]

2. ***Indian Contract Act, 1872*** – Contract defined, Elements of valid contract, Classification of contracts, Offer and acceptance, Consideration, Capacity to contracts, Free consent, Legality of object and consideration, Illegal agreements, Termination of contracts, Breach of contract, Indemnity and guarantee, Laws of agency

[6L]

11. ***Negotiable Instruments Act, 1881*** – Definition and characteristics of different types of negotiable instruments, Parties to a negotiable instrument and their capacity, Dishonour of cheques, Discharge from Liability, Crossing of cheques,Bank drafts and Banker's cheques .

[6L]

4. ***Sale of Goods Act, 1930*** – Classification of goods, Conditions & Warranties, Passing of ownership rights, Rights of an unpaid seller, Remedies for breach of Contract of Sale of Goods.

[4L]

Module – II (20 hrs)

5. ***Companies Act, 1956*** – Nature and kinds of companies, Formation, Memorandum, Articles, Prospectus, Capital – shares, debentures, borrowing powers, minimum subscription,Appointment of Directors; Winding up of companies. [6L]

6. ***Consumer Protection Act, 1986*** – Salient features and objectives of the Consumer Protection Act, 1986, Different Consumer redressal Forums, Composition and jurisdiction of district, state and National forum, Mode of complaints, Procedures for disposal of complaints, Penalty.

[4L]

7. ***Laws relating to*** - Patents, Trade marks, Competition, Copyright, Packaging, Fair Trade Practices, Shops and Establishments, Cyber Laws, Banking Regulation, Insurance Regulation.

[10L]

Readings:

2. H.K. Saha Ray- Law of Contracts – Eastern Law Book House
3. P. P. S. Gogna : A Textbook of Business Law, S. Chand & Co.
4. Commercial Law- Bharat Law House, New Delhi
5. M. S. Pandit & S. Pandit : Business Law, Himalaya Publishing.
6. K. R. Bulchandani : Business Law, Himalaya Publishing.

Business Environment of India

2nd Semester

[MB – 201] : Business Economics-II

Macroeconomic Theory and

1. **Circular Flow of Income and Concepts of Macro Aggregates**:

Core concepts of business cycle and phases; National Income Accounting, Three methods of measuring GDP/GNP, concepts in open and closed economy (4L)

2. **Theory of Income Determination**:

***Simple Keynesian Model*:** closed economy, concepts of consumption and investment as addition to capital stock, private autonomous expenditure multiplier, introducing the Government – fiscal policy – Government expenditure multiplier, Tax Rate Multiplier, Balanced Budget Multiplier, Extension: Paradox of Thrift (Multiplier Analysis – both mathematical and graphical methods to be discussed.)
***Introduction of money and asset market*: *IS-LM*:** Fiscal policy and monetary policy, comparison of crowding out effects.
Introduction to foreign trade : export and import multipliers

(15L)

3. **Inflation and Unemployment:**
Concepts of inflation – demand pull and cost push, Stabilization policies, introduction to Philips curve as relation between inflation and unemployment. (2L)

4. **International Linkages:**
Concepts of Balance of Payments; alternative exchange rate systems – fixed, flexible and managed float; Comparative Advantage as basis for trade; tariff and non-tariff barriers.

(5L)

Reference: Principles of Macroeconomics, Soumyen Sikdar, Chapter 7
Managerial Economics, Suma Damodaran, Chapter 15
Economics(Eleventh Edition) – Lipsey & Chrystal – chapter 22,23
Macroeconomics – Dornbusch & Fischer – Chapters 12
Economics(Sixteenth Edition) - Samuelson & Nordhaus – 34,35

5. **Planning, Growth and Development :**
- A brief introduction to Indian Planning system, Planning and Marketisation, Imperative and Indicative Planning (1L)

Reference: Economic Environment of Business: S.K. Mishra and V.K. Puri

- Concepts of Growth and Development, understanding of required rate of savings through incremental capital-output ratio, required money supply growth with income elasticity of money demand, (1L)

Reference: Growth and Development, A P Thirlwal

6. **Economic Crisis of India in Late '80s and Road to Liberalization –**

- Economic crisis, Economic Reforms commencing from 1991,understanding of Macroeconomic Stabilization and Structural Reforms, (1L)

Reference: Economic Environment of Business: S.K. Mishra and V.K. Puri, Chapter 18
Indian Economy since Independence, Uma Kapila ed.
Indian Economy: Datt & Sundharam, Chapter 15,16

- *Monetary and Fiscal Policy Reforms*– Composition of Indian money market, Components and Instruments of Monetary policy, Concepts and Management of Deficits, (2L)

Reference: Indian Economy: Datt & Sundharam, Chapter 51, 55
Indian Economy since Independence, Uma Kapila ed.

- *New Industrial Policy and Labour Reforms* –Issues of privatization, Disinvestment and divestment, industrial sickness, labour market reforms-some conceptual issues, safety net for labour (3L)

Reference: Economic Environment of Business: S.K. Mishra and V.K. Puri, Chapter 27, 35, 44
Indian Economy since Independence, Uma Kapila ed.
Indian Economy: Datt & Sundharam, Chapter 10

- *Banking and Capital Market Reforms*- Banking structure in India, Banking sector reforms Composition of Indian capital market, SEBI and Capital Market Reforms (3L)

Reference: Indian Economy: Datt & Sundharam, Chapter 51
Indian Economy since Independence, Uma Kapila ed.
Economic Environment of business: S.K. Mishra and V.K. Puri, Chapter 47

- *Trade Policy Reforms* –major components of trade policy reforms, idea of FEMA, current and capital account convertibility. (3L)

Reference: Indian Economy: Datt & Sundharam, Chapter 47
Indian Economy since Independence, Uma Kapila ed.
Economic Environment of business: S.K. Mishra and V.K. Puri, Chapter 28, 29

Reference

Macroeconomic theory – W.H. Branson – AITBS Publishers
Managerial Economics – Suma Damodaran – Oxford University Press
Macroeconomics - E. D'Souza - Pearson Education Macroeconomics
– Dornbusch & Fischer – Tata McGraw Hill
Macroeconomics Theory and Applicationss – G.S.Gupta - Tata McGraw Hill
Economics(Eleventh Edition) – Lipsey & Chrystal – Oxford University Press
Principles of Macroeconomics - N.Gregory Mankiw – Thomson South-Western
Economics(Sixteenth Edition) - Samuelson & Nordhaus – Tata McGraw Hill

.

Indian Economy – Datt & Sundharam – S.Chand
Economic Environment of Business – Mishra & Puri –
Himalaya Publishing House Indian Economy since
Independence – Uma Kapila Edt.

WBUT/MBA/2ND Sem
(4Credit : 40 Hrs

[MB – 202] : ORGANIZATIONAL BEHAVIOUR – II

Module – I (20 hrs)

1. **Organization :** Mission, Goals, Characteristics, Types, Structure & Design – Elements, Designs by Function, Product, Location, Matrix; Virtual Organisation, Learning Organisation, Mechanistic and Organic Models; Determinants of an Organization Structure – Strategy, Size, Technology & Environment [6 L]

2. **Managerial Perspectives on Organizational Behaviour** : Management Functions, Managerial Roles, Skills, Challenges and Effectiveness [4 L]

3. **Organizational Culture :** Culture and its Characteristics, Types of Cultures, Western and Oriental Organization Cultures, Indian Organization Culture, Culture Change [4L]

4. **Group Behaviour** : Characteristics of Group, Types of Groups, Stages of Development, Group Decision-making, Organizational Politics, Cases on Group Decision-making [6L]

Module – II (20 hrs)

5. **Communication in Organization :** Purpose, Process, Channels and Networks, Barriers, Making Communication Effective, Transactional Analysis (TA), Cases on Communication [4L]

6. **Leadership Styles** : Leadership Theories, Leadership Styles, Skills and Influence Processes, Leadership and Power, Examples of Effective Organizational Leadership in India, Cases on Leadership [6L]

7. **Conflict in Organization :** Sources of Conflict, Types of Conflict, Conflict Process, Johari Window, Conflict Resolution, Cases on Conflict Resolution. [6L]

8. **Organizational Change and Development :** Meaning, Process, Resistance to Change, OD - Meaning, Process, Interventions : Sensitivity Training, Survey Feedback, Process Consultation, Team Building, Inter-group Development [4L]

Readings

Hersey, P., Blanchard, K.H., Johnson, D.E.- Management of Organizational Behaviour, Prentice- Hall of India/Pearson Education

Luthans, Fred - Organizational Behaviour, McGraw-Hill

Pareek, Udai - Understanding Organizational Behaviour, OUP

Robbins, S.P., TA Judge & S.Sanghi : Organizational Behaviour, Pearson

Sekaran, Uma - Organizational Behaviour – Text and Cases, McGraw Hill

Shukla , Madhukar - Understanding Organizations – Organizational Theory and Practice in India, Prentice Hall

WBUT/MBA/2nd Sem (4 Credit : 40 hrs.)

[MB 203] : QUANTITATIVE METHODS II
(Inferential Statistics & Research Methodology)

1. Probability distributions [4L]
   (i) Discrete distributions - Binomial, Poisson
   (ii) Continuous distributions - Uniform, Exponential, Normal, LogNormal

2. Sampling Methods and Sampling Distributions [4L]
   (i) Statistics and Parameter
   (ii) Types of sampling - random and non-random sampling
   (iii)Sampling distributions - conceptual basis; standard error; sampling from normal populations; Central Limit Theorem; relationship between sample size and standard error; Finite Population Multiplier

3. Estimation [4L]
   (i) Point Estimation – properties of estimators; the method of moments and the method of maximum likelihood
   (ii)Interval Estimation – basic concepts; interval estimates and confidence interval; calculation of interval estimates of mean and proportion from large samples; interval estimation using the t distribution; determining the sample size in estimation

4. Hypothesis Testing [4L]
   (i) Basic Concepts – Null and Alternative Hypotheses; Type I and Type II errors; the p – value; the significance level; power of a test
   (ii) One Sample Tests – hypothesis testing of means when the population standard deviation is known and when it is unknown; hypothesis testing of proportions for large samples

(iii) Two Sample Tests – tests for difference between means – large sample sizes and small

sample sizes; test for difference between proportions – large sample sizes; testing difference between means with dependent samples

5. Chi–square and Analysis of Variance [4L]
   (i) Chi-square as a test of (a) independence and (b) goodness of fit
   (ii) ANOVA – basic concepts; the F distribution and the F statistic; inferences about a population variance; inferences about two population variances

6. Non-parametric tests [4L]
   (i) Basic concepts
   (ii) The Sign Test
   (iii) The Signed-Rank Test
   (iv) Rank Sum Tests – The Mann-Whitney U Test; The Kruskal-Wallis Test
   (v) Tests based on runs
   (vi) Rank Correlation
   (vii) Kolmogorov-Smirnov Test

7. Time series and Forecasting [4L]
   (i) Variations in time series; trend analysis; cyclical, seasonal and irregular variations; consideration of all four components of a time series
   (ii) Time Series analysis in frecasting

8. Multivariate data analysis (demonstration of software package) [12 L]
   (i) Basic concepts
   (ii) Types of multivariate techniques
   (iii) Factor Analysis
   (iv) Multiple Regression Analysis
   (v) Discriminant Analysis
   (vi) Cluster

Analysis Suggested

Readings

Anderson, Sweeny and Williams – Statistics for Business and Economics (9th edition); Thomson Learning

Hair, Anderson, Tatham and Black – Multivariate Data Analysis (6th edition); Pearson Education

Hanke and Wichern – Business Forecasting (8th edition); Pearson Education

Johnson and Wichern – Applied Multivariate Statistical Analysis(3rd edition); PHI/Pearson Education

Keller – Statistics for Management and Economics (7th edition); Thomson Learning

Levin & Rubin - Statistics for Management (7th edition): Prentice Hall/Pearson Education

Lind, Marchal and Wathen – Statistical Techniques in Business and Economics(13th edition); TMH

Newbold – Statistics for Business and Economics (6th edition); Pearson Education

Ross, Sheldon – Introductory Statistics; Elsevier

Srivastava and Rego – Statistics for Management: TMH

WBUT/MBA/2ND Sem
(4 Credit : 40 Hrs)

[MB-204]: Productions & Operations Management

12. **Introduction to Production Management:** Production system; Types of production; Replanning and control functions; Relations with other departments; Efficiency of production planning and control. (2 L)

13. **Plant Location and Layout:** Choice and selection of plant location; Plant design; Plant layout; Product layout and process layout; Criteria for a good layout. (2 L)

14. **Plant Maintenance and Materials Handling:** Types of maintenance – preventive, predictive and overhaul; Selection of good materials handling equipment; Methods of Materials handling. (4 L)

15. **Materials Management:** Need, scope and advantages; Materials Requirement Planning (MRP – I, MRP – II) and Budgeting (2 L)

16. **Inventory Planning and Control:** EOQ Models – without shortage, with shortage, with price breaks; Effect of quantity discount; ABC, FSN and VED classification; Inventory control; Perpetual, Two-bin and Periodic Inventory System; Just In Time (JIT) system; Probabilistic Inventory Models (discrete and continuous cases) (6 L)

17. **Scheduling** : Gantt Chart, Johnson's Rule (2L)

18. **Network Analysis:** PERT/CPM techniques, Shortest path algorithms and their applications (Dijkstra's algorithm; Flloyd's algorithm, Kruskal's algorithm, Ford-Fulkerson method) (4 L)

19. **Inspection and Quality Control:** Types and criteria of inspection; Statistical Quality Control; Control Charts. (4 L)

20. **Total Quality Management(TQM) :** Concept, features, need for TQM, Cost of quality, Kaizen, Kyodo, PDCA cycle, 7 QC tools, 5s concept, Quality circle. Total Quality in Service Sector (6 L)

21. **Quality Management System :** Quality Audit, Concepts of six sigma (2 L)

22. **Purchase Management:** Purchase Policy, Systems, Procedures; Vendor Selection; Negotiation; Vendor Development and Evaluation; Make or Buy decision; Legal aspects of purchasing. (2 L)

23. **Work and method study** (2L)

24. **Case Studies** (2 L)

Suggested Readings

Bedi – Production and Operations Management (2nd edition); Oxford University Press

Buffa, E. S. and Sarin, R. K. – Modern Production /Operations Management; John Wiley

Chary, S.N. – Production and Operations Management (3rd edition); TMH

Chase, Jacobs, Aquilano and Agarwal – Operations Management for Competitive Advantage (11th edition); TMH

Dutta – Materials Management; PHI

Evans and Lindsay – The Management and Control of Quality (6th edition); Cenage Learning

Gaither and Frazier – Operations Management (9th edition); Thomson Learning

Gopalakrishnan and Sundaresan – Materials Management: An Integrated Approach; TMH

Hansen and Ghare – Quality Control and Applications; PHI

Krajewski, Ritzman and Malhotra – Operations Management (8th edition); Pearson Education

Mahadevan – Operations Management; Pearson Education

WBUT/MBA/2ND Sem
(4Credit : 40 Hrs)

[MB-205]: Management Information Systems II

[Information System Management]

[1] Management Information System (MIS): **[6L]**

Definition, Characteristics, Subsystems of MIS (Activity and Functional subsystems),
Structure of MIS; Reasons for failure of MIS.
Understanding Major Functional Systems: Marketing & Sales Systems, Finance & Accounting Systems, Manufacturing & Production Systems, Human Resource Systems, Inventory Systems; their sub systems, description and organizational levels.

[2] Decision Support Systems (DSS): [3L]
Definition, Relationship with MIS, Evolution of DSS, Characteristics, classification, objectives, components, applications of DSS.

[3] ERP, CRM, SCM [12L]
ERP(Enterprise Resource Planning):
[a] Concepts of ERP, architecture of ERP, Generic modules of ERP,
Applications of ERP, concept of XRP (extended ERP)
[b] Features of commercial software like SAP, Oracle Apps, MS Dynamics NAV, Peoplesoft
CRM (Customer Relationship Management):
[a] Concepts of CRM, Features of CRM (acquisition and retention)
[b] Features of commercial software like I2-Rhythm, SIEBEL
SCM (supply Chain Management):
[a] Concepts of SCM, drivers of SCM, inbound & outbound
[b] Definition, brief description and applicability of: eProcurement, eTailing, eLogistics, eCollaboration, eIntegration.

Case studies for ERP, CRM, SCM

[4] Database Management Systems (DBMS) [e.g. MS-Access/ Oracle/ MS SQL Server / MySQL etc.] [4L+6P]
[a] What is a DBMS. Need for using DBMS. Concepts of tables, records, attributes, keys, integrity constraints, 3-schema architecture, data independence.
[b] SQL: DDL & DML concepts, SQL commands [ANSI standard].

[5] Data Warehousing and Data Mining [5L]
Concepts of Data warehousing, data mart, meta data, multidimensional modeling,
Online Analytical Processing (OLAP), Online Transaction Processing (OLTP), Knowledge Management System (KMS), Active Knowledge Management Server (AKMS)
Features of commercial software like Informatica
Data mining concepts, knowledge discovery v. data mining, data mining applications.
Case studies on data warehousing / data mining

[6] Outsourcing [4L]
Concepts of BPO, KPO
Business Process Outsourcing: Concept & Application, Advantages & Disadvantages, Types of outsourcing, Resource Requirements.
Technical framework of automated outsourcing.
Documentation: contracts, Service Level Agreements (SLA), Non-disclosure Agreements (NDA).
Other Applications – Remote Transaction Processing.

Suggested Readings:
Dan W. Paterson, Introduction to Artificial Intelligence & Expert System, PHI./Pearson Education

Davis & Olson, Management Information System, Tata McGraw Hill

ISRD, Introduction to Database Management Systems, Tata McGraw Hill

Ivan Bayross : SQL & PL/SQL , BPB

Leon : ERP, Leon Tech Press

Loney & Koch: The Oracle 9i Complete Reference, Oracle Press

Loudon and Loudon, Management Information System, Prentice Hall/Pearson Education

Mahadeo Jaiswal & Monica Mittal : Management Information Systems, OUP

Michale J. Berry and Gordon S. Linoff, Mastering Data mining – The Art and Science of Customer Relationship Management

O' Brien, Introduction to Management Information System, Tata McGraw Hill

Sadagopan : ERP : A Managerial Perspective, Tata McGraw Hill.

Turban, Aronson : Decision Support System & Intelligent System , Pearson Education.

WBUT/MBA/2ND Sem
(4 Credit : 40 Hrs)

[MB-206]: Human Resource Management

Module – I (20 hrs)

1. **Human Resource Management :** Scope and Coverage, Structure and functions of HR Department, Role of HR manager. [2L]

2. **Human Resource Planning :** Supply and Demand Forecasting methods, Manpower Inventory, Career Planning, Succession Planning, Personnel Policy, Human Resource Information System (HRIS) [6L]

3. **Recruitment and Selection :** Process, Sources, Methods of selection, Interviewing Method, Skills and Errors. [4L]

4. **Human Resource Development** : Policy and Programmes, Assessment of HRD Needs, HRD Methods : Training and Non-Training. [4L]

5. **Performance Appraisal Systems** : Purpose, Methods, Appraisal instruments, 360^0 Appraisal HR Score Card, Errors in appraisal, Potential Appraisal, Appraisal Interview. [4L]

Module – II (20 hrs)

6. **Compensation Management** : Wages - Concepts, Components; System of Wage Payment, Fringe Benefits, Retirement Benefit. [4L]

7. **Industrial Relations in India :** Parties; Management and Trade Unions, Industrial Disputes : Trends, Collective Bargaining, Settlement Machineries, Role of Government , Labour Policy in India. [4L]

8. **Workers' Participation in Management** : Concept, Practices and Prospects in India, Quality Circles and other Small Group Activities. [2L]

9. **Discipline Management** : Misconduct, Disciplinary action, Domestic Enquiry, Grievance Handling [4L]

10. **Strategic HRM :** Meaning, Strategic HRM vs Traditional HRM, SHRM Process, Nature of e-HRM, e-Recruitment & Selection, e-Performance Management, e-Learning [6L]

Readings

Agarwala T. - Strategic Human Resource Management, OUP

Aswathappa, K. - Human Resource Management, Tata McGraw Hill

Jyothi P. & Venkatesh, D.N. - Human Resource Management, OUP

Pattanayek, B. - Human Resource Management, PHI

Ramaswamy, E.A. - Managing Human Resources, OUP

Saiyadain, M.S - Human Resource Management : Tata McGraw Hill

Mondal Sabari & Goswami Amal - Human Resource Management: Vrinda Publications

MBA Revised & Final Syllabus'2008(For the Batch starting from Academic year

WBUT/MBA/2ND Sem
(4 Credit : 40 Hrs)

[MB – 207] : FINANCIAL MANAGEMENT

MODULE - I

1. Introduction : Introduction to Financial Management - Goals of the firm - Financial Environments. 1L

2. Time Value of Money : Simple and Compound Interest Rates, Amortization, Computing more that once a year, Annuity Factor. 2L

3. Valuation of Securities : Bond Valuation, Preferred Stock Valuation , Common Stock Valuation, Concept of Yield and YTM. 2L

4. Risk & Return: Defining Risk and Return, Using Probability Distributions to Measure Risk, Attitudes Toward Risk, Risk and Return in a Portfolio Context, Diversification, The Capital Asset Pricing Model (CAPM) 3L

5. Cost of Capital : Concept , Computation of Specific Cost of Capital for Equity - Preference – Debt, Weighted Average Cost of Capital – Factors affecting Cost of Capital 4L

6. Working Capital Management : Overview, Working Capital Issues, Financing Current Assets (Short Term and Long Term- Mix), Combining Liability Structures and Current Asset Decisions, Estimation of Working Capital. 4L

7. Cash Management : Motives for Holding cash, Speeding Up Cash Receipts, Slowing Down Cash Payouts, Electronic Commerce, Outsourcing, Cash Balances to maintain, Factoring. 4L

8. Accounts Receivable Management : Credit & Collection Policies, Analyzing the Credit Applicant, Credit References, Selecting optimum Credit period. 4L

9. Capital Budgeting : The Capital Budgeting Concept & Process - An Overview, Generating Investment Project Proposals, Estimating Project, After Tax Incremental Operating Cash Flows, Capital Budgeting Techniques, Project Evaluation and Selection - Alternative Methods 8L

10. Operating & Financial Leverage : Operating Leverage, Financial Leverage, Total Leverage, Indifference Analysis in leverage study. 2L

11. Capital Structure Determination : Concept of Capital Structure, Legal Requirements, Factor affecting Capital Structure, Theories of Capital Structure like N.I. Approach, NOI Approach, Traditional Approach, M-M Approach. 3L

12. Dividend Policy : Passive Versus Active Dividend Policy ; Factors influencing Dividend Policy, Dividend Stability, Stock Dividends and Stock splits, Dividend Theories like Gordon's Model, Walters Model, M-M Approach and Residual Approach, Legal Consideration of Paying Dividends. 3L

Readings :

Text:

Brigham - Financial Mgmt, 10th Ed, Thomson Learning

Chandra, Prasanna - Financial Management - Theory & Practice, Tata McGraw Hill. Srivastava,

Misra: Financial Management, OUP

Van Horne and Wachowicz : Fundamentals of Financial Management, Prentice Hall/ Pearson Education.

Reference:

Brealey and Myers : Principles of Corporate Finance, Tata McGraw-Hill. Burner: Case Studies in Finance, Tata McGraw-Hill.
Copeland, Weston, Shastri: Financial Theory and Corporate Policy, Pearson Education A
Damodaran : Corporate Finance , Wiley.

WBUT/MBA/2ND SEM
(4Credit : 40 Hrs.)

[MB – 208]: Marketing Management

1	**Introduction**: Fundamentals of Marketing – need, want, demand, value, exchange, transaction, competition; Definitions of marketing; Evolution of marketing concepts(orientations); Marketing Mix – 4Ps and their sub-elements.	**3L**
2	**Strategic Marketing Planning**: Corporate level strategies – SWOT Analysis; Product-Market Grid; Marketing Plan – its nature and content	**2L**
3	**Marketing Environment**: Major components of the microenvironment and macro-environment	**2L**
4	**Marketing Research**: Role of marketing research in marketing decision making; Sources of market information, Overview of the methods of primary and secondary research	**2L**
5	**Market Segmentation, Targeting and Positioning**: Concepts of market segmentation and targeting; Various bases for segmentation (consumer and industrial); Differentiation and Positioning strategies	**4L**
6	**Consumer Behaviour**: A framework of consumer decision making process, overview of major factors influencing consumer behavior	**2L**
7	**Product**: Product Classification, Service – characteristics and expanded service mix elements; Product Line, Product Mix; Product Life Cycle and marketing strategies at different stages of PLC; New Product Development	**6L**
8	**Branding and Packaging**: Purpose of branding; Characteristics of good brand name, brand naming strategies; Brand equity; Branding strategies; Purpose of Packaging; Types of Packaging – primary, secondary, shipping packages	**3L**
9	**Pricing**: Procedure for price setting; Pricing objectives; Cost and demand consideration; Pricing methods; Modifying the price; Pricing Strategies and Tactics	**4L**
10	**Marketing Channels**: Importance of Marketing intermediaries; Types of intermediaries and their functions; Levels of marketing channels; Channel flows and functions; Channel design decisions; Network Marketing	**4L**
11	**Promotion**: Elements of Promotion Mix (advertising, sales promotion, personal selling, direct marketing, PR and publicity) – characteristics and their relative strengths and weaknesses; Concept of Integrated Marketing Concept	**4L**

12	**The Selling Process**: Steps of selling process	**2L**
13	**Demand Forecasting**: Basic concepts of market potential, Sales potential and Sales forecast, Purpose and methods of sales forecasting	**2L**

Readings:

Blois - Textbook of Marketing, OUP

Etzel, M.J., Walker, B.W. & W.J. Stanton - Marketing; TMH

Grewal, D. & Levy, M. - Marketing ; TMH

Kotler, P., Keller, K., Koshy, A. & Jha, M. - Marketing Management; Pearson

Kurtz, David L, Boone , Louis E - Principles of Marketing; Thomson

Lamb - Marketing 7th ed; Thomson Learning

Palmer - Principles of Marketing; OUP

Ramaswamy & Namakumari - Marketing Management; McMillan

Saxena, R. - Marketing Management; TMH

Zikmund & Amico - Marketing; John Wiley & Sons

3rd Semester

WBUT/MBA/3RD SEM
(4 Credit : 40 Hrs.)

[MB-301] : Management Accounting

1. Background - Nature of Management Accounting **2L**

2. Financial Analysis - Cash Flow Statement (as per AS3), Financial Statements Analysis **6L**

3. Cost Accumulation - Fundamentals of Job-Order Batch & Process Costing, Variable Costing and Absorption (Full) Costing, Activity Based Costing System **8**L

4. Profit Planning - Cost -Volume-Profit Analysis, Budgeting and Profit Planning, Flexible Budgeting **6L**

5. Cost Control - Standard Costs and quality Costs, Cost Variance Analysis, Revenue and Profit Variance Analysis, Responsibility Accounting **6L**

6. Relevant Costing – Introduction – Relevant Costs and Revenues- Cost Concepts – Outsourcing Decision – Decision to accept or reject a special order – Decision to continue or abandon a project **6L**

7. Total Cost Management – Introduction – TCM and Business competitive edge - TCM Principles and implementation **6L**

Readings:

Text:

Atkinson - Management accounting, Pearson Education

Banerjee, Bhabatosh – Financial Policy and Management Accounting, PHI, 7th edition, 2008

Bhattacharyya, Asish - Cost Accounting For Business Managers, Elsevier

Drury - Management & Cost Accounting, Thomson Learning

Horngren, Dattar, Foster - Introduction to Management Accounting, Pearson Education/PHI

Khan & Jain - Management accounting, Tata Mcgraw-Hill

Singbhi & Bodhanwalla: Management accounting: Text & Cases, PHI

Reference:

Hansen & Mowen: Cost Management, Thomson Learning

Kaplan: Advanced Management accounting, Pearson education

WBUT/MBA/3RD SEM

(4 Credit :40 Hrs.)

[MB-302] : Operations Research

1. LINEAR PROGRAMMING [12L]

a) Formulation of LP Models

b) Graphical LP Solution

c) Simplex Method

d) Artificial Variables – Big M - Method and Two-phase Method

e) Duality, Sensitivity Analysis, Shadow Price and their economic interpretation Software package to be used in (b), (c), (d) and (e) above.

2. TRANSPORTATION, TRANSHIPMENT AND ASSIGNMENT MODELS [6L]

a) Construction of Transportation, Transshipment and Assignment Models

b) The Transportation Algorithm

c) The Hungarian Method for the Assignment Problem

d) The Transshipment problem

Software package to be used for implementing the algorithms.

3. GOAL PROGRAMMING [3L]

a) Construction of Goal Programming Models

b) Goal Programming Algorithms

4. INTEGER LINEAR PROGRAMMING [4L]

a) ILP Algorithms - Branch and Bound, Cutting Plane Algorithm

5. DECISION ANALYSIS [4L]

a) Decision Making under Certainty – Analytic Hierarchy Process

b) Decision Making under Risk and Uncertainty

6. MARKOV PROCESSES AND MARKOV CHAINS [4L]

a) State transition diagrams

b) Calculation of the state of the system at any time period

c) Calculation of the long-run system state (both for systems with and without absorbing states): Fundamental Matrix and associated calculations.

Application models to be discussed in detail

7. QUEUEING MODELS [3L]

a) M/M/1 Queues and applications

b) M/M/c and M/M/c/k Queues and their applications

8. SIMULATION MODELS (Use of package) [4L]

a) Construction of Simulation Models

b) Generation of Random numbers from discrete

distributions Application models to be discussed in detail

Suggested Readings

Anderson, Sweeny and Williams - Quantitative Methods for Business (8th edition); Thomson learning

Hillier, F.S. and Lieberman, G.J. : Operations Research (8th edition), TMH

Kasana, H.S. & Kumar, K.D. - Introductory Operations Research; Springer

Render B, Stair R M Jr, Hanna M E : Quantitative Analysis for Management (9th edition); Pearson Education

Ross, Sheldon – Simulation; Elsevier

Taha, H.A. : Operations Research - An Introduction (8th edition), Prentice Hall/Pearson Education

Vohra, N. D. Quantitative Techniques for Management (3rd edition), TMH

Winston, Wayne L. – Operations Research: Applications and Algorithms (4th edition); Thomson Learning

WBUT/MBA/3RD SEM
(8 Credit : 80 Hrs.)

[MB-303] : Project Work & Viva Voce

MBA Revised & Final Syllabus'2008(For the Batch starting from Academic year

Specialization

WBUT/MBA/3RD SEM

(4 Credit :40 Hrs.)

[MM-301] : SALES & DISTRIBUTION MANAGEMENT

1	**Introduction to Sales Management**: Evolution of sales department, Nature & scope of personal selling & sales management, Roles and functions of a sales manager	**2L**
2	**Personal Selling**: Types of selling situations, Buyer-seller dyad, Theories of selling, Personal selling process (pre-approach, approach, presentation, handling objections, closing a sale, follow-up)	**4L**
3	**Planning and Organizing Sales Force Efforts**: Strategic planning and sales organization, Sales department relations, Distribution network relations, Sales forecasting, Sales budget, Sales objectives, Sales territories and quotas	**3L**
4	**Sales Force Management**: Different personnel functions of a sales manager, Quantitative and qualitative requirements of sales force planning – determination of sales force size, job analysis for type of sales people required	**2L**
5	**Recruitment and Selection**: Sources of recruitment, Selection process, Methods of selection	**2L**
6	**Training and Development**: Need and purpose of training, Types of training, Designing a training programme - ACMEE model	**2L**
7	**Directing the Sales Force**: Supervision, Territory management, Determination of quota/target, Determination of compensation of sales force, Leading and Motivating	**6L**
8	**Controlling**: Analysis of sales, Costs and Profitability, Evaluation of sales force performance	**3L**
9	**Marketing Channels**: Structure, Functions and advantages, Types of channel intermediaries – wholesalers, distributors, stockists, sales agents, brokers, franchisers, C&F agents, and retailers	**2L**
10	**Channel Design and management**: Channel objectives & constraints, Identification, evaluation and selection of channel alternatives, Channel management and control – recruiting and selecting channel members, motivating, evaluating channel arrangements	**3L**
11	**Physical Distribution & Logistics**: Goals, function, processing, warehousing, inventory & transportation	**1L**
12	**Retail Management**: Retail strategies, Location, Types of retail formats, Stores layout, Visual merchandising techniques	**3L**
13	**Merchandising**: Merchandise management, Planning of assortment, Servicing and buying of merchandise, Supply chain management in retailing	**3L**
14	**Case Studies**	**4L**

Readings:

Berman, B & Evans, J.R.: Retail Management, Pearson

Cundiff, Still & Govoni : Sales Management – Decision, Strategies & Cases; PHI./Pearson Education

Futrell, Charles M.: ABC of Relationship Selling; McGraw Hill.
Ingram,T,N., Laforge, R.W. & Avila, R.A.: Sales Management, South-Western
Johnson, Kurtz & Scheuing: Sales Management Concept, Practices & Cases; McGraw Hill. Lancaster, David & Jobber, Geoff: Selling & Sales Management; Macmillan (India).
Levy, M. & Weitz, B.A.- Retailing Management - McGrawHill Panda, Sahadev: Sales & Distribution Management; OUP Pradhan, S : Retailing management, TMH
Shapiro, R.L., Stanton, W.J. & Rich, G.A.: Management of Sales Force; TMH

WBUT/MBA/3RD SEM
(4 Credit : 40 Hrs.)

[MM-302] : ADVERTISING & SALES PROMOTION

1	**Introduction to Advertising**: History of advertising, Definition, features and role of advertising, Relationship of advertising with other promotional mixes and marketing mix elements, Integrated marketing communication approach, *Various forms of Advertising: (national, retail, cooperative, trade, industrial financial, corporate, public services, political*)	**2L**
2	**Advertising Industry**: Advertisers, Advertising agencies and support organizations, Types of agencies, Structure, role and functions of ad agencies, Agency compensation and evaluation	**2L**
3	**Foundations and Determinant of Advertising Strategies**: ***Segmentation, Targeting, Positioning***: Identifying segments, Prioritizing target segments, Formulating positioning strategies ***Consumer Behaviour and Advertising***: Consumer as decision maker, Consumer as social being ***Advertising and Brand Building:*** Definition of brand, Life-cycle of a brand, Brand positioning, Brand personality, Brand image, Brand equity, Brand essence, Brand value proposition and promoting desired image, Corporate brands	**4L**
4	**Advertising Planning**: Planning process, steps, situation analysis, objective setting, budgeting, developing promotional strategies, implementation and control	**2L**
5	**Advertising Objectives**: Sales approach versus communication approach, DAGMAR approach	**2L**
6	**Advertising Budget**: Budgeting approaches – different methods, allocation of budget	**1L**
7	**Designing an Advertisement**: Different dimensions, Importance of creativity to advertising, Creative process, Developing a creative brief	**3L**
8	**Message Strategies**: ***Creative strategy***: Message structure, Message appeals- rational, emotional, scarce, Message source-credibility, attractiveness, power, execution frameworks, ***Creative tactics:*** for print and electronic media - copywriting, body copy, headlines, layout, visuals, slogans, logos, signatures, storyboards	**3L**
10	**Media Strategies**: Media planning process, Media mix, Coverage, Reach, Frequency, Impact, Scheduling, Different types of media – television, radio, print, outdoor, internet - characteristic features, advantages and limitations, Factors influencing choice of media flows and functions, Channel design decisions, Network Marketing	**3L**

11	**Advertising and Society**: Social – social and cultural ; Ethical – deceptive, offensive, economical- effect on consumer choice, competition, cost and prices, and Regulatory aspects of advertising – ASCI	2L

12	**Sales Promotion**: Definition, Reasons for rapid growth of sales promotion, Objectives of sales promotion, Types of sales promotion, Tools and techniques of consumer and trade promotion with merits and demerits, Role of sales promotion in IMC programme	**6L**
13	**Public Relations and Corporate Advertising:** Definition, New role of PR, Objectives, tools and techniques of public relations with merits and demerits, Corporate advertising- scope and types, role of PR in IMC programme	**2L**
14	**Direct Marketing:** Definition, Objectives of direct marketing, Types of direct marketing, Tools and techniques of direct marketing with merits and demerits, Role of direct marketing in IMC programme	**2L**
15	**Evaluation of Promotional Effectiveness:** Reasons to measure effectiveness, What, when, where, how to test, Testing methods - pre-testing and post testing techniques, Essentials of effective measures, Problems with current methods, Measuring effectiveness of other promotions	**2L**
16	**Case Studies**	**4L**

Readings :

Arens W.F.: Contemporary Advertising; TMH
Belch G.E. & Belch M.A: Advertising & Promotion; TMH
Clow K.E., Baack D.: Integrated Advertising, Promotion & Marketing Communications; Pearson O'Guinn T. C., Allen C.T.: Advertising and Integrated Brand Promotion; South Western
Ogilvy David: Ogilvy on Advertising; Pan Books Percy: Strategic Advertising Mgmt; OUP
Shimp T.A.: Advertising & Promotion; South Western
WellsW., Brunett J.& MoriartyS.: Advertising; Pearson Wright J. S, Winter W. L. & Zeigler S K: Advertising; TMH

WBUT/MBA/3RD SEM
(4 Credit : 40 Hrs.)

[MM-303] : MARKETING RESEARCH

1	**Marketing Research**: Introduction, Application of research in managerial decision making, Aims, roles, functions and sources of research, Client-user interface – role conflict and resolution	**3L**
2	**Research Process**: Steps in planning – research purpose and objectives, Converting a manager's problem to a researcher's problem, Problem formulation, research design, data collection, analysis, report presentation, *Preparation of the research proposal*	**3L**
3	**Research Design**: Types of research - exploratory studies, descriptive studies, causal studies, Types of information needed - behavioural and non-behavioural correlates	**3L**

4	**Sources of Data**: Primary and secondary source (govt, non-govt. and syndicated research), Errors in data collection	**4L**
5	***Primary Source – Methods of Data Collection****: Focus groups, Observations, Case histories; Surveys – survey methods - structured and unstructured, direct and indirect methods, in-depth interviews, panels, interview media: personal, telephone, internet & mail, questionnaire construction & pre-testing, qualitative research - projective techniques (word association, sentence completion, thematic apperception test, third person technique), Experimentation - types of causation,* inferring causal relationships*, natural & controlled experiments, experimental designs*	**4L**

6	**Measurement & Scaling**: Types of scales *(data/levels of measurements)*, nominal, ordinal, interval, ratio scales, Attitude measurement methods - variability methods (paired comparison, ranking, rating, ordered category sorting), Quantitative judgement methods - *verbal*, numerical, graphical scales, factorization, constant sum method scales, Multi-item scales - Semantic differential scale, Likert scale, Thurstone scale (equal-appearing, case V), Stapel, considerations in developing scales, reliability and validity of scales	**6L**
7	**Sampling**: Census vs. sample, Steps in sampling process, Definition of population, frame, unit, and element, Types of sampling: Probability sampling techniques - simple random sampling, systematic random sampling, stratified sampling, cluster sampling, area sampling, Non-probability sampling techniques - convenience sampling, quota sampling, judgment sampling, snowball sampling, Determination of sample size	**4L**
8	**Analysis of Data**: Compilation, tabulation & classification of data, Analytical techniques – univariate analysis, hypothesis testing- parametric and non-parametric tests, bivariate analysis. Overview of some multivariate analysis techniques like multiple regression, discriminant analysis, factor analysis, cluster analysis, multi - dimensional scaling and conjoint analysis, forecasting methods (application and interpretation only)	**10L**
9	**Application Areas**: Advertising research, Motivation research, Sales analysis & forecasting research	
10	**Case Studies**	**3L**

Readings:

P.Green & D. Tull & G Albaum: Research for Marketing Decisions; PHI.
Boyd & Westfall: Marketing Research: Text & Cases; All India Traveller Bookseller
Luck and Rubin: Marketing Research; PHI
D.R. Cooper & P.S.Schindler : Marketing Research; TMH
Naresh K Malhotra: Marketing Research; Pearson
G C Beri: Marketing Research; Tata McGraw Hill.
M.J. Schmidt & S.Hollensen: Marketing Research; Pearson
Aaker & Day: Marketing Research; Wiley
G.Churchill & D. Iacobucci ; Marketing Research, South Western
S.Easwaran & S.Singh: Marketing Research; Oxford
D.George & P. Mallery: SPSS for Windows: Step by Step; Pearson Education

WBUT/MBA/3RD SEM
(4 Credit : 40 Hrs.)

[FM-301] : CORPORATE TAXATION & TAX PLANNING

Part – A: Corporate Taxation:

Income Tax

1. **Definition**: Cannons of Taxation Person, Assesse, Income, Previous Year, Assessment Year, Gross Avoidance, Planning, Exemption, Planning, Exemption, Deduction, Rebate, Relief. [4L]

2. **Residential Status & Tax Incidence**: Individual & Corporate. [1L]

3. **Income Exempted from Tax**: Individual & Corporate. [1L]

4. **Computation of Taxable Income of Individual, HUF, Firm & Corporates:** **[8L]**

a) Heads of Income – Salaries, Income from House Property, Profits & Gains from Business or Profession, Capital Gains, Income from Other sources.

b) Deduction from Gross Total Income – 80CCC, 80D, 80DDB, 80E, 80G, 80GG, 80GGA, 80C, 80U.

c) Set Off & Carry Forward of Losses – Principles, Meaning, Inter – sources & Inter – head Set Off, Carry Forward and Set Off of Losses under sections 71,72 & 73.

5. **Computation of Tax for Individual, H.U.F, Firm & Corporate**: [8L]

a) Rate of Tax and Surcharge.

b) Tax Rebate.

c) Tax Management – Submission of Return and Procedure of Assessment, Pan, Tan, Preliminary ideas of Deduction and Collection of Tax at Source, Advance Payment of Tax, Refund of Tax.

d) Minimum Alternate Tax.

Indirect Tax

1. **Central Sales Tax Act, 1956.** **[4L]**

a) Definition: Dealer, Sale, Turnover, Sale Price, Sale or Purchase in course of interstate Trade or Commerce, Sale or Purchase outside a state, Sale or Purchase in the course of Import or Export.

b) Incidence & Levy of Tax, Exemption, Determination of Turnover.

c) Registration of Dealers & Procedures thereof.

2. Customs Act and Valuation: Basic Concepts only. **[2L]**

3. **Central Excise Act, 1944**: Definitions – Broker or Commission Agent, Central Excise Officer, Excisable Goods, Factory, Manufacture, Sale & Purchase, Wholesale Dealer & Cenvat. [3L]

4. Value Added Tax: Basic concept of VAT. **[2L]**

Tax Planning

[7L]

1. Scheme of Tax Planning
2. Tax Planning for Salaries
3. Tax Planning for Profits and gains of Business or Profession
4. Tax Planning for Capital Gains
5. Tax Factor in Dividend Policy
6. Tax Planning for Employee's Remuneration
7. Tax Planning different forms of Business Organization

Readings:

- Lal & Vasisht: Direct Taxes, Pearson Education
- Singahnia: Direct Taxes, Taxman
- Singhania: Indirect Taxes, Taxman

WBUT/MBA/3RD SEM
(4 Credit : 40 Hrs.)

[FM-302] : CORPORATE FINANCE

1. **Introduction to Corporate Finance** : Corporation- The Role of Financial Manager – Agency Problem. 2L

2. **NPV as Investment Decision Criteria**: Comparing NPV with other methods of investment Decisions, The problems of Multiple rates of Return, Mutually Exclusive Projects, Capital Rationing. 2L

4. **The Investment Decision** : The Cash Flow, Equivalent annual Costs, Project Interactions 4L

5. **Capital Budgeting and Risk:** Company and Project Costs of Capital, Measuring the Cost of Equity, Capital Structure and the Company Cost of Capital, Risk Adjusted Discount Rate , Sensitivity Analysis, Monte Carlo Simulation, Real Options and Decision Trees. 4L

6. **Alignment of Managers and Owners Goal:** : Practical aspects of Capital Investment Process, Information and Capital Investment, Incentives and their role in agency Problem, Measuring and Rewarding Performance: EVA, Pros and Cons of EVA 4L

7. **Market efficiency and Corporate Financing** Basics of EMH, The Anomalies, The lessons for the Corporate Manager 2L

8. **The Financing Decision**: The Financing Process, The financing Mix: Tradeoffs and Theory, The Optimal Financing Mix, The Financing Mix and Choices 7L

9. **The Dividend Decision:** Dividend Policy, analyzing Cash Returned to Stockholders, Buybacks, Spinoffs, and Divestures 7L

10. **Valuation:** Principles and Practice of Valuation, Value Enhancement: Tools and Techniques, Acquisitions and Takeovers 8L

Readings :

Text:

Brearly, Myers , Mohanty: Corporate Finance, Tata McGraw-Hill
Copeland Weston Shastri: Financial theory & Corporate Policies, Pearson Education
Damodaran: Corporate Finance, Wiley
Ehrhardt & Brigham: Corporate Finance- a Focused approach, Thomson Learning
Megginson, Smart & Gitman: Principles of Corporate Finance, Thomson Learning
Ross, Westerfield & Jaffe: Corporate Finance, Tata McGraw-Hill

Reference:

Benninga & Sarig: Corporate Finance A valuation approach, McGraw-Hill Inl.

WBUT/MBA/3RD SEM
(4 Credit : 40 Hrs.)

[FM-303] : SECURITY ANALYSIS & PORTFOLIO MANAGEMENT

1. **Introduction:** The Investment Environment, Financial Instruments, The Securities Trading – Market & Mechanism. 2L

2. **Security Analysis:** Macroeconomic and Industry analysis, equity Valuation Models, Company analysis, Brief Overview of Technical Analysis (Charts, Line Charts, Line & Volume, Charts, Point & Figure Charts, Bar Chart, Candlestick Chart, Various Patterns, Dow Theory & Elliot wave Theory) 8L

3. **Portfolio Theory** : Concepts of Risk & Return, Diversification of Risk, Optimum Portfolio Selection Problem - Markowitz Portfolio Theory - Mean Variance Criteria (MVC) - MVC and Portfolio Selection - Portfolio Selection. 10L

4. **Equilibrium in Capital Markets** : The Capital Asset Pricing Model, Index Models, Arbitrage Pricing Theory and Multifactor Models of Risk and Return, Market Efficiency and Behavioral Finance, Empirical Evidence on Security Returns 10L

5. **Bond Portfolio Management :** Bond Prices and Yields, the Term structure of Interest Rates, Managing Bond Portfolios 6L

6. **Active Portfolio Management:** Portfolio Performance Evaluation, International Diversification, The Process of Portfolio Management, The Theory of Active Portfolio Management 4L

Readings :

Text:

- Bodie, Kane, Marcus,; Mohanty : Investments, Tata McGraw-Hill
- Chandra: Investment Analysis and Portfolio Management, Tata McGraw-Hill
- Fischer & Jordan: Security Analysis & Portfolio Management, Pearson Education/PHI
- Sharpe, Alexander, Bailey: Fundamentals of Investment, Pearson Education/PHI
- Ranganatham & Madhumati: Investment analysis & Portfolio Management, Pearson education
- Rielley & Brown: Investment analysis & Portfolio management, Thomson Learning

Reference:

- Elton, Grubber: Modern Portfolio Theory, Wiley
- Haugen: Modern Investment Theory, Pearson Education
- Hirschey & Nofsinger: Investments, Tata McGraw-Hill
- Luenberger: Investment Science, OUP
- Sharpe: portfolio Theory & Capital Markets, McGraw-Hill Intl.

WBUT/MBA/3RD SEM
(4 Credit : 40 Hrs.)

[SM-301] : DATABASE MANAGEMENT

[1] DBMS: **[6L]**

What is a DBMS. Need for using DBMS. Concepts of tables, records, attributes, keys, integrity constraints, 3-schema architecture, data independence.
Data models – Hierarchical, Network, Relational

[2] The Relational Model, Language & Systems : **[12L]**

The Relational Data Model & Relational Algebra.
SQL: DDL , DML, & DCL concepts, SQL commands (ANSI standard).
Oracle 8 or above/ MS SQL Server / MS Access

[3] Integrity and Security: **[3L]**

[a] Integrity constraints, concept of triggers, stored procedures (theoretical concepts only)
[b] Database Security & Authorization (concept of GRANT / REVOKE).

[4] Database Design : **[5L]**

ER modeling [Entity-Relationship Diagrams (ERD), construction of tables], Functional Dependencies & Normalization (upto 3NF; concept of BCNF), Denormalization.
Case Study on Normalization.

[5] System Implementation Techniques : **[6L]**

[a] Query Processing & Optimization (concept only).
[b] Transaction Processing Concepts, Concurrency Control and Recovery Techniques (concept only).

[6] Indexing concepts: **[3L]**

Ordered indices (primary , secondary, dense, sparse, multilevel), concepts of hashing (static, dynamic)

[7] Advanced Data Models & Emerging Trends : **[5L]**

Advanced Data Modeling Concepts, Object–Oriented Databases, Distributed Databases & Client Server Architecture, XML

Suggested Readings:

Elmasri, Navathe : Fundamentals of Database System, Pearson Education.

Silberschatz, Korth, Sudarshan : Database System Concepts, McGraw Hill International. Date : An Introduction to Database System, Pearson Education.
Hopper, Prescott, Mc fadden : Modern Database Management, Pearson Education. Molina, Ullman, Widom : Database System , Pearson Education.
Schaum's Outline Series : Funamentals of Relational Databases, Tata McGraw Hill. Chang : Oracle XML Handbook , McGraw Hill.
ISRD, Introduction to Database Management Systems, Tata McGraw Hill
Loney & Koch: The Oracle 9i Complete Reference, Oracle Press
Ivan Bayross : SQL & PL/SQL , BPB
Mata, Toledo, Schaum's Outline Series for Database Management System, TMH

WBUT/MBA/3RD SEM
(4 Credit : 40 Hrs.)

[SM-302] : SYSTEM ANALYSIS AND DESIGN

1. Overview of Systems Analysis & Design: [7L]

Business Systems Concepts, Systems Development Life Cycle(SDLC), Life cycle models (Waterfall model, Prototyping model, Incremental model, Spiral model, RAD model), Feasibility Analysis, Design, Implementation, Testing & Evaluation.

2. Business Process Re-engineering:
[3L] Concepts, Process involved; Case study.

3. System Requirement Specification & Analysis: [6L]
Fact finding techniques, data - flow Diagrams, data dictionaries, process organization & interactions, decision analysis, standards (IEEE/ ISO).
Data Modeling & Analysis.

4. Detailed Design Modularization: [6L]
Module Specification, File Design, Systems Development involving Data Bases.
Structured Design Methodology(SDM).
Database Design
Output Design
Input Design
User Interface Design.

5. Object-Oriented Analysis &Design (OOAD):
[10L] Modeling System Requirements using 'USE CASES'
Object Modeling: Object Structure, Object Features, Classes & Objects, Key Concepts of object oriented approach, Object Representation methods, Object Status, State Diagram, Modeling behaviour in object Modeling - use cases, Object oriented Analysis, Object oriented Design, Modeling & Design using UML, Activity Diagram & Swim lane Diagram, Sequence & Collaboration Diagram.
OO Testing strategies & techniques.

6. System Control & Quality Assurance through testing: [5L]
Design Objectives reliability & maintenance, Software Design & documentation tools, top – down, bottom – up and variants. Testing strategies & techniques: Unit and integration testing, testing practices and plans. System Controls, Audit Trails, CASE Tools.

7. Hardware & Software Selection: [3L]
Hardware acquisition, memory , process, peripherals, Benchmarking, Vendor selection, Software selection – operating

system, languages, Language Processes, performance & acceptance criteria.

Suggested Readings:

Booch, Grady: Object Oriented Analysis & Design.
Hoffer: Modern System Analysis & Design, Pearson Education.
Jalote, Pankaj: An Integrated approach to Software Engineering, Narosa.
Kendall: System Analysis & Design, Pearson.

Kiewycs, Igor Hawrysz: Systems Analysis & Design, PHI Rajaraman V., Systems Analysis and Design, PHI
Rambaugh, Jacobson, Booch: UML- Reference Manual, Pearson.
Roger Pressman: Software Engineering - A Practitioner's Approach , TMH Senn: Analysis & Design of Information Systems, McGraw Hill International.
Sommerville : Software Engineering-Pearson Education.
ISRD, Structured System Analysis and Design, Tata McGraw Hill

WBUT/MBA/3RD SEM
(4 Credit : 40 Hrs.)

SM-303] : COMPUTER AIDED MANAGEMENT

Course Contents :

1. Management Support Systems: [6L]
Introduction, Objective and Characteristics,
Collaborative Computing Technologies: Group Support System, Technologies,
Data Reviewing Concept and Applications

2. Data Warehousing : [3L]
Access, Analysis, Mining & Visualization; OLAP & OLTP

3. Enterprise Decision Support Systems: [3L]
Concepts, Definitions, EIS, Organisational DSS, Supply & Value Chains & Decision Support.

4. Knowledge Management: [5L]
Concepts, Development Methods, Technologies & Tools, Electronic Document Management. Case Study.

5. Knowledge - Based Decision Support: [20L]

- Artificial Intelligence (AI):
Concept, Definition, AI Vs Natural Intelligence.

Expert System:
Concept, Structure, Working, Benefits & Limitations.

Knowledge Acquisition & Validation: Scope, Methods, Validation, Verification, Analysing, Coding, Documenting & Diagramming.

Knowledge Representation
Inference Techniques
Intelligence System Development.
Fuzzy Logic, Genetic Algorithm

8. Neural Computing :
Fundamentals, Types of Neural Networks, Neural Network Application,
Development, Architecture, Learning Algorithms, Neural Network Software & Hardware,
Benefits & Limitations of Neural Networks.

9. Grid Computing: [1L]
Overview.

10. Implementing & Integrating Management Support Systems: [2L]
Issues, Strategies, Generic Models, Integrating EIS, DSS, ES & Global Integration.

Suggested Readings:

Dan W. Paterson: Introduction to Artificial Intelligence & Expert System, PHI /Pearson Education.
Kartalopoulos, Stamatioys V : Understanding Neural Networks & Fuzzy Logic – Basic Concepts & Application, PHI.

Poole, Computational Intelligence, OUP
Rich, Elaine & Knight, Kevin: Artificial Intelligence, Tata McGraw Hill.
Turban, Aronson: Decision support system & Intelligent System, Pearson.
Yegnanarayana, B : Artificial Neural Networks, PHI
Zaruda, Introduction to Artificial Neural System, Jaico

WBUT/MBA/3RD SEM
(4 Credit : 40 Hrs.)

[HR – 301] : EMPLOYMENT & COMPENSATION ADMINISTRATION

Module – I (20 hrs)

1. **Employment** – Policy and Programmes, Reservation Rules, Employment of Women and Dependents, Employment of Land Oustees [6 L]
2. **New Employment Practices –** Outsourcing, Contingent Workers, Employee Leasing [4 L]
3. **Employment of Contract Labourers** – Provisions and Practices under the relevant Act. [4 L]
4. **Case Studies on Contract Labourers** [6L]

Module – II (20 hrs)

5. **Concept of Wage** – Minimum Wage, Fair Wage, Living Wage, Wage Policy [4 L]
6. **Compensation** – Wage/Salary, Real Wage, Components of Wages: Basic, Dearness Allowances, House Rent Allowances, City Compensatory Allowance, Other Allowances, Wage Fixation, Pay for different types of employees, Managerial Compensation. [4 L]
7. **Dearness Allowance** – Methods of DA payment, Consumer Price Index, Neutralization. [2 L]
8. **Productivity and Wages** – Productivity Bargaining, Incentive Payments, Productivity Linked Bonus, Incentives – Individual & Group, Case Studies on Productivity Bargaining. [4 L]
9. **Employee Benefits –** Statutory & Voluntary Benefits, Retirement Benefits – Provident Fund, Gratuity, Pension, Medical Insurance; Reward Management [6 L]

Readings

Belcher, D.W.: Wage and Salary Administration, Prentice Hall

Dasgupta, A. K. : A Theory of Wage Policy, OUP.

Mondy, R.W. & Noe, R.M. : Human Resource Management, Pearson

Raynolds, G. L. : Labour Economics & Labour Relations, Prentice-Hall.

Verma, Pramod : Labour Economics and Industrial Relations, Tata McGraw Hill.

Govt of India : Report of the National Commission on Labour (1st – 1969, 2nd – 2002)

ILO : Payment by Results

WBUT/MBA/3RD SEM
(4 Credit : 40 Hrs.)

[HR – 302] : HUMAN RESOURCE PLANNING

Module – I (20 hrs)

1. **Basics in HR Planning** – Macro Level Scenario of HRP, Concepts and Process of HRP, Considerations – Technology, Finance, Product Demand. [4 L]

2. **Methods and Techniques** – Demand Forecasting : Managerial Estimates, Trend Analysis, Utilization Analysis : Work Study, Job Analysis, Supply Forecasting : Inventory Analysis, Wastage Analysis, Markov Analysis, Balancing Supply & Demand, Issues of Shortage and Surplus. [10 L]

3. **Human Resource Information System (HRIS) -** Concept and Procedures [4 L]

4. **Strategic HRP –** Planning, Tools and Evaluation [2L]

Module – II (20 hrs)

5. **Job Analysis & Job Evaluation** – Job Analysis - Concepts, Process, Job Description, Job Specification, Uses, Limitations; Job Evaluations – Concepts, Methods, Limitations [6 L]

6. **Measurements of HR Planning** – HR Audit, HR Accounting [4 L]

7. **HR Plan – Implementation Strategies** – Recruitment, Redeployment, Redundancy, Retention, Productivity Plan, Training Plan, Career Plan, Succession Plan, Compensation Plan. [6 L]

8. **Case Studies on HR Planning** [4L]

Readings

Bennison, M. & Casson, J. : The Manpower Planning Handbook, McGraw Hill.

Bell, D. J. : Planning Corporate Manpower, Longman.

Bohlander, G., Snell, S., Shermen, A. : Managing Human Resources, Thomson.

Mellow, Jeffrey A. : Strategic Human Resource Management, Thomson

Pettman, B. O. & Taverneir, G. : Manpower Planning Workbook, Gower.

Walker, J. W. : Human Resource Planning, McGraw Hill.

ILO : Job Evaluation

WBUT/MBA/3RD Sem
(4 Credits: 40 hrs)

[HR – 303] : LABOUR LAWS

Module – I (20 hrs)

1. **Legal Framework :** Evolution of Labour Laws in India [2 L]

2. **Laws regulating Establishment** – Factories Act, 1948; Mines Act, 1952; Plantations Labour Act, 1951; Shops & Establishment Act [6 L]

3. **Laws relating to Remuneration** – Payment of Wages Act, 1936; Minimum Wages Act, 1948; Payment of Bonus Act, 1965; Equal Remuneration Act, 1976 [6 L]

4. **Case Laws on Remuneration** [6 L]

Module – II (20 hrs)

5. **Laws relating to Industrial Relations** – Industrial Disputes Act, 1947; Industrial Employment (Standing Orders) Act, 1946; Trade Unions Act, 1926 [8 L]

6. **Laws relating to Social Security** – Workmen's Compensation Act, 1923; Employees' State Insurance Act, 1948; Employees' Provident Funds & Misc. Provisions Act, 1952; Maternity Benefit Act, 1961; Payment of Gratuity Act, 1972 [8 L]

7. **Case Laws on Industrial Disputes** [4 L]

Readings

Agarwal, S. L. : Labour Relations

Law in India, McMillan Pathak, A.

: Legal Aspects of Business, Tata

McGraw Hill

Samant, S. R. & Dongre, B. N. (eds) : CLR's Yearly

Labour Digest, Dwivedi. Srivastava, S. C. : Labour Law in

Factories, Mines, Plantations etc., Printice Hall.

Labour Law Journal – Case Laws

WBUT/MBA/3RD Sem
(4 Credits: 40 hrs)

[HSA – 301] : Concept of Community Health

1) Concept of Community Health (HSA-301)

a) Evolution of the concept, history of public health and public health administration-world scenario & in India.

b) Promotion of community health: maternal, infant, child health, adolescent & adult health, community geriatrics, community mental health.

c) IEC and community health in Health Care Delivery System

d) Health organization structure: center, state, and periphery

e) Policies relating to public health

f) Medical Sociology: Social and cultural factors relating to disease prevention, changing social condition and needs for health care facilities, Urbanization, industrialization, migration change in life style, change in values.

g) Environmental Health: community water resource, waste disposal, housing, food security, community recreation & health promotion, community resources & education, community initiatives in communicable disease control.

h) Dynamic community organization of health care: community involvement for health planning & promotion, professional preparation & capacity building, community health programme of various health agencies, appraisal of community health services.

WBUT/MBA/3RD Sem
(4 Credits: 40 hrs)

[HSA – 302] Epidemiology & Analysis of Healthcare Information Data : Concept of Community Health

2) Epidemiology & Analysis of Healthcare Information Data (HSA-302)

a) Concept of Disease: - Natural History, Level of Prevention, Rehabilitation

b) Concept of Epidemiology: -Definition & Concept, Types of uses, basic measurement in epidemiology.

c) Epidemiology of Communicable & Non communicable Diseases:

Communicable Diseases: Influenza, Filaria, TB, Plague, Tetanus, Diptheria, Malaria

Non-communicable Diseases: Diabetes, Stroke, Alcoholism,

d) Epidemiological Studies: epidemiology study design- observational epidemiology, experimental epidemiology, analytic studies- case control & cohort study, intervention study.

e) Epidemiology & public health policy

f) Statistical applications in epidemiology

g) Preventive measures for Disease outbreak: - Vaccination, Immunization, Surveillance, Monitoring

h) School Health Programmes:-objective, organization & functioning

i) Occupational Health & Diseases:

j) Management of Handicapped Persons: Handicapped Children, Geriatric age group.

k) Health Services Research

WBUT/MBA/3RD Sem
(4 Credits: 40 hrs)

[HSA – 303] Health Policy & National Health Programme

3) Health Policy & National Health Programme (HSA-303)

a) Definition & understanding of public policy in health; politico-economic perspective of health policy formulation.

b) National Health Policy-Basis & strategies for implementations

c) National Population Policy

d) Health System Reforms

e) Drug Policy – Special reference to primary Healthcare programme

f) National Health Programme-Malaria, Polio, AIDS, Blindness, Leprosy Immunisation Programme for children, family welfare programe, community mental health program: Stress management, diabetes control programme, cancer control programme, ICDS, water supply & sanitation programme.

g) Primary Healthcare programmes-Rural Faculties for Healthcare –Administration of rural Hospitals/Health Centres

h) Evaluations of Health Programmes

[SD 301] : Business Environment and Sustainable Development

Course content

1. **Perspectives on Development** - Conventional Theories of Development, understanding the development perspectives and practices adopted in India after Independence (2L)
2. **Sustainable Development -** History, ideology, **c**oncept and approaches of Sustainable Development, sustainable development and human development, concept of environmental sustainability (3L)
3. **Policy frameworks governing environment and sustainability issues** in business and industry settings: principles of sustainability indicators for business and governance, International conventions; Agenda 21, World Summit on Sustainable Development; Implementation Plan and the Millennium Development Goals (5L).
4. **Sustainability Strategy and indicators –** goals and indicators of sustainability, concept of ecological footprints, policy framework for sustainability, Organizational Creativity and Innovation for sustainable development, Reflections and Overview: Future Research Directions and Applications (5L)
5. **The response of business to sustainable development**: historical perspective, Evolution of the sustainability agenda in the corporate world; Review of key international and local drivers of the sustainability agenda, New trends in Corporate Governance, corporate social responsibility (4L)
6. **International Trade, Investment, and Sustainable Development:** Reconciling Open Markets with Environmental and Social Concerns; Environmental Protection and Economic Liberalization; Tariff Preferences as Means of Promoting Sustainable Economic Development; Market Access and Environmental and Health Standards (6L)
7. **Contemporary business trends in environmental management System -** Cleaner Production, Economic-Efficiency, Zero Waste, Industrial Ecology and Safety, Health and Environmental Management (5L)

8. **Ethics and Sustainable Development -** Introduction to ethics and decision-making, Ethics and development (2L)
9. **Case study preparation, field visits** – 8 contact hour

Readings

1. The Earthscan Reader in Business & Sustainable Development. R. Starkey & R. Welford (Eds), Earthscan, London.
2. Blueprint for a Sustainable Economy: David Pearce, Edward B. Barbier
3. Sustainable Development: Issues and Case Studies/edited by Srikumar Chattopadhyay and H.S. Sharma

WBUT/MBA/3rd SEM
(4 credit : 40 Hours)

[SD 302] : System Approach to Sustainable Development

Course Content

1. **System approach to sustainable development and landscape management** – Concept of system, systematic vis a vis systemic approach, systemic approach to landscape planning and management (3L)
2. **Natural Resources and their management at landscape level** – Natural and rural environmental resource base, renewable and non renewable resources, common property resources, consumption and wastage of resources, recycling of wastes, management of land, water, forest and other natural resources for sustainable development, approach for integrated resource management (4L)
3. **Ecosystem approaches to Natural Resource Management**: Role of ecosystem in Sustainable Development; Basic framework of sustainable development, linkages between ecosystem and sustainable development (3L)
4. **Ecosystem restoration and rehabilitation**- Definition and terminology; Ecological dimensions; Socio economic perspectives and dimensions; ecosystem rehabilitation within development context, cost factor, traditional knowledge and modern techniques, Strategy of Ecosystem restoration, Protected Area Management: Protected area and Protected area network; Wild life habitat management; Ecotourism- Definition, Scope and Potentials. (6L)
5. **Systemic approach to human resource management for sustainable development –** population environment relation: a system approach, literacy, education, livelihood and poverty, health and nutrition, Access to Improved Sanitation and Improved Water, Water Supply & Sanitation, social networks, synergic action (4L)
6. **Economic Analysis for sustainable development –** growth and development, understanding government budgets, privatisation and globalisation, WTO agenda, Patent (3L)
7. **Conservation of natural resources and waste management** – Resource cycle, need for conservation, in situ and ex situ conservation measures, solid waste management in the rural and urban context, case studies on waste management in rural areas (5L)
8. **Sustainable Energy Management –** problem of conventional energy sources, issues related to global warming, renewable energy sources (4L)
9. **Climate Change and CDM**- Result of climate change, environmental degradation related to climate change: green house warming, ozone depletion, Climate change and its effects on health, incorporation of environmental issues in production, green operation, green process, waste minimization, carbon trading (8L)

Readings

1. Steve Hinchliffe: Geographies of Nature, Sage Publication
2. Edited by Pushpam Kumar: Ecology and Human Well Being, Sage Publication
3. P. Meenakshi, Elements of Environmental Science and Engineering, Prentice Hall of India
4. Sanal Kumar Velyudhan: Rural Marketing, Sage Publication
5. Edited by Samir Dasgupta; Globalisation and After, Sage Publication
6. R Stanton and S. Armstrong: Rural Marketing – An Interactive Approach
7. T P Gopalaswamy, Rural marketing Environment, Problems and Strategies, VIKAS
8. S.K. Garg, Ecological and Environmental Studies, Khanna Publishers
9. N.A. Siddiqui, Environmental Management Systems and Natural Resources, Khanna Publishers

Specialisation on Sustainable Development (SD)

WBUT/MBA/3rd SEM
(4 credit : 40 Hours)

[SD 303] : Sustainable Development in the context of Human Development

Course Content

1. **Concept of Human Development** – Evolution of the concept of human development, advances in human development, measuring human development, human development index, sustainable human development, the limits to human development, prospects for millennium development goals (8L)
2. **Inequality and human development** – Social justice and morality, growth and efficiency, public policy goals, inequality within countries, human development potential for improving the distribution of growth (4L)
3. **Contribution of health towards human development** – Ensuring longevity, indicators of health, preventive and curative health, nutrition, water and sanitation (4L)
4. **Contribution of education towards human development** – concept of education, literacy vis a vis education, provision for education, indicators of education (4L)
5. **Contribution of resources needed for a decent standard of living towards human development** – Concept of poverty, inequality in income or consumption, indicators of poverty, measuring poverty index (4L)
6. **Gender Development Index –** Gender and human development, gender related development index, gender empowerment measure (4L)
7. **Human development scenario –** Human development in India, human development in West Bengal (4L)
8. **Understanding human development conditions in any selected village and case study preparation** (8 contact hour)

Readings

1. Human Development Report 2005- International cooperation at a crossroads: Aid Trade and security in an unequal world, Oxford University Press
2. Margaret Khalakdina: Human Development in the Indian Context Volume 1, Sage Publication

M.B.A. in Shipping Management (SHM)

SHM 301 – Shipping Practice **WBUT/MBA/ 3rd Sem**
(4 Credit : 40 Hours)

1. **Introduction: [4L]**
Scope, Functions, Geography of Sea Transport, Current Shipping Environment (2L). Shipping & Type of Ships.
2. **Different Shipping Trades: [4L]**
Liner, Charter, Multimodal Transport etc., future & options for shipping.
3. **Planning in Shipping Practice: [2L]**
Aspects, Planning & Control Theory, Steps & Advantages. Econometric model
4. **Documentation: [4L]**
Bill of Exchange, Bill of Lading & Types of Invoice, Customs, Charter party & its different clauses, Documentation in accidents & damages, Associated Ship & Shipping Documents, Agency Documents, Office documents for a voyage.
5. **Concept of I.M.O. & Regulatory Bodies**: **[2L]**
I.M.O –Its different wings & responsibilities, Co ordination with I.M.O members, Conversion of a draft proposal into rules & limitations, Flag State & Port state,P & I club & its role
6. **Introduction to Controlling Bodies: [4 L]**
Govt. of India, D.G.S, M.M.D.S., Different classification bodies, P.S.C.O.,their Roles & responsibilities, Admiralty Court, U.S. Court & their Empowerment.
7. **Marine Casualty : [4L]**
Shipping Casualty, Investigation & Inquiries, Seaworthiness, Unsafe ships , Implications
8. **Maritime Claims: [4L]**
Different Maritime Claims (cargo, hull & freight), & compensations, Lien & Insurance Claims.
9. **Ship Procurement & Commissioning: [4 L]**
Registration, Mortgage, Lay time Terminology.

10. **Shipping Contacts: [2 L]**

Different types of Contract & Obligations

11. **Ship Broking Practice: [4 L]**

Associated documentation ,Procedure of forwarding custom/Immigration papers, Clearances, Special Certification, Stowing / Penalties.

Suggested Readings

[1] Elements of Shipping : Alan E. Branch - Chapman & Hall

[2] Free Ports & Foreign Trade Zones : Dr. Richard S. Thoman - Cornell Maritime Press

[3] Planning & Control Theory : M.J. Manohar Rao - Himalaya Publishing House, Mumbai- 400004.

[4] Ship Sale and Purchase : Iain S. Goldrein, M.A. - Lloyd's London Press Ltd.

[5] The Law Relating to 'Bills of Lading' 'Charter Parties' 'Contract of Affrightment' : B.C. Mitra Bar-at-Law - UBA, Allahabad

[6] Shipping Practice : Edward F. Stevens - Sir Issac Pitman & Sons, London.

[7] International Ocean Shipping – Current Concepts & Principles : Bernhard J. Abrahamsson - West View Press, Boulder, Colorado

[8] Futures & Options for Shipping : James Whiteside Gray - Lloyod's Lish, U.K.

SHM 302 – Commercial & Shipping Law **WBUT/MBA/ 3rd Sem**

(4 Credit : 40 Hours)

1. **Introduction: [2 L]**
   Indian Shipping Administrative Structure, I.N.S.A., F.O.S.M.A., MASSA & OECD countries & their roles in international Trade.
2. **History of Maritime Law: [2 L]**
   Byzantian Law, Roman Law, British Law, US Law, Civil Law, Common Law & Other Associated Laws, Maritime Law & its implications .
3. **Concept of Law/Rules: [2 L]**
   Distinction between Conventions,Rules, Regulations, Act, Article, Section etc., Classification Survey Societies, D.G.S & M.M.Ds & their roles & functions.
4. **Classification/Regulatory Rules/Regulations: [8 L]**
   Rules of classification societies, Shipyard rules & roles, Codes, Acts, Regulations, Tonnage & Load line, O.P.R.C.,FAL, ISM Convention H.N.S. Protocol, S.V.L., Rules governing I.M.O Conventions – S.O.L.A.S., M.A.R.P.O.L., C.L.C., I.O.P.C., PORT STATE CONTROL, Salvage , Merchant Shipping Act, Admiralty, U.S. Laws, I.L.O., P.A.L., Special claims governing passenger vessels, Merchant Shipping Act '58
5. **Insurance: [6 L]**

Elements, Types of Policies, Warranty, Types of loss, Particular & General Average, Deviation, Institute clauses, Navigation clauses, Collision Liability Clause, Types of policies of P& I Club & claim compensation, York Antewerp Rules 1950

6. **Law of Sea Transportation: [4 L]**
   Carriage of Goods by Sea Act, Hague Rules 1924, Indian carriage of Goods Act 1925, Important Law cases & studies,
7. **Laws of Contract : [4 L]**
   Elements , writing, Registration, Wagering Agreements, Contract of Indemnity & Guarantee, Ship Yard Laws& Contracts , Obligations
8. **Custom & Immigration Laws: [2 L]**
   Customs & immigration procedures, laws of different countries violation & penalties & redressal
9. **Statutory & Special Certificates: [4 L**]
   ISM, LNG, LPG, Tanker, Bulk carrier, D.O.C., Baltic code, ISF / BIMCO Updates, Special trade, Passenger ships, Pilgrim ships, Multimodal Conventions
10. **Admiralty Court: [2 L]**
    Structure, Cases Admissible in the Admiralty Court, Procedures, Verdict and Implications.
11. **Associated Laws: [4 L]**
    Harbour Laws**,** UNCLOS, Shipping Documental Laws & Procedures, Laws relating to dangerous & sensitive cargo, Special Laws related to tankers, LNG, LPG, Product Carriers, Passenger Vessels etc.

Suggested Readings

[1] Merchant Shipping Act : Govt. of India - Govt. of India Publications.

[2] SOLAS 74/78 : IMO (UNO) - IMO Publications, London.

[3] MARPOL 73/78 : IMO (UNO) - IMO Publications, London.

[4] Law of Marine Insurance : Susan Hodges - Cavendish Publishing Ltd. U.K.

[5] Marine Insurance : B.C. Mitra, Bar-at-Law - University Book Agency, Allahabad.

[6] Merchant Shipping in India : B.C. Mitra, Bat-at-Law - UBA, Allahabad.

[7] Harbour Law : R.P.A. Douglas - Lloyds of London Press Ltd., UK.

[8] Principles of Mercantile Law : Avtar Singh - Eastern Book Agency, Lucknow.

[9] Marine Insurance Claims : J. Kenneth Goodacre - Wetherby & Co., London.

SHM 303 – Shipping Economics & e-Business **WBUT/MBA/ 3rd Sem**
(4 Credit : 40 Hours)

1. **Introduction: [4 L**]
   Ship Finance, Role of Financial Institutions, Private & Public Shares, International Finance, Life of a Ship, Investment & return on ships, Shipping economics Cycle & its depending factors
2. **Operation Economics: [6 L]**
   Charter Hire, Tramping the modes of payment & receipt, Role of different Stake Holders,Role of different currencies, Depreciation & Appreciation financial procedures with liner services.

3. **Accounting & Record Keeping: [6 L]**
   Accounting, Preparation & Recognition of Balance sheets, Different applicable Report preparation drawing inferences.
4. **Claims & damage compensation: [4 L]**
   Collision, Pollution, Accidents, Wreck- Removal, Compensation thereof insurance, P&I claim procedures & Limitations.
5. **Cost Evaluation: [4 L]**
   Cost evaluation of different charters, voyages, World Scale, Choice of appropriate runs in cost effectiveness for different ships
6. **E-Business: [6 L]**
   E Commerce, Importance & Limitation in shipping Business , Financial risk management, Investment management, procurement & sales of vessels.
7. **Case Studies: [10 L]**
   Evaluation of rise and fall of different shipping companies, finding optimum charter hire, computation of collision, aground death and other related cases, etc.

Suggested Readings

[1] The Business of Shipping :Lane C Kendall : Chapman & Hall

[2] Financial Risk management : James W Gray : Fair Play Publications , --- for Shipping Industry London

[3] Shipping Finance : J . E . Sloggeth : Fair Play Publications , London

[4} International Finance -- (Finance Management & International Economy) : Maurice Levy : McGraw –Hill

[5] Maritime Law (All Six Volumes) : Edited by – Lennart Hagberg : Kluwer Deventer ((Netherlands)

[6] International Ocean Shipping Current Concepts & Principles : Bernhard J. Abrahamsson : West View Press Boulder, Colorado

PORT & LOGISTIC MANAGEMENT (PLM) **WBUT/MBA/3rd Sem (4 Credit /40hours)**

PLM 301- International Transport Systems

1.0 **Classification of Ports : [6 L]**
Type of Ports (Sea & Riverine , Free Port , Free Zone) ,
Type of cargo, type of service, type of legal contracts, functional type of ships, structural type of ships, Technological changes.

2.0 **Stake Holders & Regulations : [6 L]**
Factors Determining Ship Owners / Shippers' Choice of Ports, Classification Agencies , types of transport contracts (ocean Bills of Lading , Charter Parties) ,
Premier Activities of the ship with the Port during stay.

3.0 **Risk Coverage : [10 L]**
Marine Insurance (Risks covered , Loss Principles , Underwriters , Current & Future Concepts) , P&I Club , Associated Rules of Transportation (PAL' 72 , H / V' 68 , Hamburg' 78) , Classification of Cargo, Classification of Ware Houses, Risk & Responsibility of Port Authorities, INCOTERMS, Case Studies.

4.0 **Statistics & Analysis : [4 L]**

Maritime Commercial Statistics (World Seaborne Trade, Main Bulk Commodities, World Tonnage, World Merchant Fields, Size Distribution in World Fleet).

5.0 **Registration : [10 L]**

Flags of Registry , Implication of Registry in Ship Operation, Role of Port in Registry, Rights & Obligations of a Ship at Port, Rights of Ship board Personnel under different Registry, Different Case Studies.

Premier Maritime Organizations: [4 L]

Premier International Maritime Organizations (IMO , ILO , UNICITRAL , BIMCO , CMI , IHO , ICHCA , ICS, IAPH , IALA , FIATA , IUMI etc.)

Suggested Readings

[1] Dictionary of Shipping : Alan E. Branch - Wetherby & Co., London

[2] Dictionary of Commercial Terms & Abbreviations : Alan E. Branch - Wetherby & Co., London

[3] Efficient Port : R.B. Oram & **C.**C.R. Baker - Pergamon Press Oxford

[4] Port Management & Operation : Prof. Patrick M. Alderson - LLP, London Hongkon

[5] Traffic System Analysis : Martin Wohl & Brian V. Martin - McGrew Hill Book Company

WBUT/MBA/3rd Sem

(4 Credit /40hours)

PLM 302 – Port / Shipping / Labour Laws

1.0 **Port Administration : [10 L]**

Port Administration , Ownership & Management (Types & Activities , Private Sector Participation), Port policy , EU / US Port & Transport Policy , National Port Planning , Port & State Financial Assistance.

2.0 **Port Labour & Associated Laws : [16 L]**

Port Labour Development & Employment , Labour Split , Gang Size , Tonnage & Labour , Technological changes in labour employment , Labour Improvement & Training, Safety of Labour & Cargo Regulations, Regulation involving specialized / Dangerous Cargo, ISPS Codes , , Safety of other Personnel , Environmental Laws (Application of Relevant MARPOL & other Rules) , Dock Regulations Relating to Marine Departments Operations , Rules governing immigration & health officials.

3.0 **Shipping Agency Procedures : [6 L]**

Freight & Forwarding Regulations , Custom Procedures, Port Pricing , Immigration Laws, Documents Required for Passenger Vessels, Clearing Procedure, Taxes and Penalties.

4.0 **Shipping Laws : [8 L]**

Birth and advent of Merchant Shipping Laws & Practices, Laws of Transportation, Regulation governing Shipment, Trade Practices, Pollution Fire or any other exigencies import, arrest & detention of vessels, Port Enquiry & Investigation etc.

Suggested Readings

[1] **The Law Relating to Merchant Shipping in India** : B.C. Mitra - UBA, Allahabad

[2] **International Conflicts of Labour Law** : Felice Morgenstern - ILO, Geneva

[3] **Shipping Law** : Lord Chorley & O.C. Giles - Pitman

[4] **The Business of Shipping** : Lane C. Kendall - Chapman & Hall

[5] **Harbour Law** : R.P.A. Douglas - Llyods of London Press Limited

[6] **Labour Law – Work & Development** **:**Debi S. Saini - West Vill Publishing House New Delhi

WBUT/MBA/3rd Sem
(4 Credit /40hours)

PLM 303 – Port Operation Management

1.0.Port facility : [4L]
Its present functions & features , Different types of ports , Main facilities & services , Impact of changing ship technology on ports , Berths & Terminals (Terminal Productivity Definitions , Reduction of Waiting Time , Berth size , type & layout),

2.0 Regulative & Operational Measures : [8L]
Port Environmental Matters (Organisations concerned & their involvement , Port Environmental Pollution Effects ,Port Authority Rates & Policies , Inland transport Practices & Control) , Policies for Sustainable Development , Personnel & Training , Berth Maintenance , Port Logistics & Distriparks , Number of Berth Requirements , Equipment & Terminal Layout , Vessel Traffic Services ,

4.0 **Problems : [10L]**
Basic Problems for Port Management , Classification of problems (country based , nature of ports , Effect of society , Location, Logistics , Labour etc) , case studies

5.0 **Dredging & Surveying** : **[6L]**
Licensing of River works & Dredging , Hydrographic Surveying ,

6.0 **Associated Service Management [10L]**
:Pilot age , Tugs , Bunker Supply , Emergency , Medical, Transit etc
Transport Modal Split Management , Port Traffic Control , Port Operational Planning

7.0 **Tariffs & Charges :[2L]**
Port Tariffs , Custom entry Charges , Miscellaneous Charges , Port Authority Rates & Policies , Inland transport Practices, different Case studies

Suggested Readings

[1] Elements of Port Operation & Management : Alan E. Branch : Chapman &Hall
[2] Capital Dredging : Institution of Civil Engineers : Thomas Telford London
[3] Port Management & Operations : Prof Patrick M. Alderton : LLP, London
[4] Economics Of Shipping : Alan E.Branch : Chapman & Hall Practice & Management
[5] Efficient Port : R.B.Oram & C.C.R.Baker : Pergamon Press Oxford

4th Semester

WBUT/MBA/4th SEM
(4 Credit : 40 Hrs.)

[MB -401] : PROJECT MANAGEMENT & ENTREPRENEURSHIP DEVELOPMENT

Module I

25. **Project Planning :** Project Management scenario; Project Asset – issues & problems; Gantt Chart & LOB; Network Analysis; PERT / CPM, Resource Monitoring & Control. [6L]

26. **Project Buying** : Projects Procurement Process, Life – cycle Costing, Project Cost Reduction methods, Project Stores, Organization & HRD issues, Computerization. [4L]

27. **Investment Feasibility Studies** : Managing Project Resources Flow; Project Cost – Capital & Operating; Forecasting Income, Estimation of Investment & ROI, Project Evaluation, Financial Sources, Appraisal Process. [8L]

28. **Issues in Project Management** : Project Audit, Project Monitoring & MIS, Cost Control, Real Time Planning, Intangibles. [3L]

29. **Project Management :** Case Studies [3L]

Module II

7. **Entrepreneurship** : Meaning & concept; psychological & social factors; conditions needed for entrepreneurship; role of government; qualities of a prospective entrepreneur. [2L]

8. **Entrepreneurial Motivation** : McClelland's N-Ach theory; self – analysis, personal efficacy, culture & values, risk-taking behaviour, technology backup. [4L]

9. **Entrepreneurial Skills** : Creativity , problem solving, decision making, communication, leadership quality. [2L]

10. **Information** : Assistance from different organizations in setting up a new venture; technology parks; industrial corporations; directorate of industries / cottage and small scale industries, SISI, Khadi & Village Industries Commission, DGS & DNSIC, DGFT, how to apply for assistance – procedure, forms, procedures for obtaining contract from Railways, Defence, P & T etc., SIDBI. [3L]

11. **Preparation of Project Report :** Product/service selection; feasibility report preparation [2L]

12. **Case Studies :** Diagnostic case studies of successful / unsuccessful entrepreneurs; key variables explaining success/ failures [3L]

Suggested Readings

Chandra, Prasanna – Projects (6th Edition); TMH

Clements and Gido – Effective Project Management; Thomson Learning

Clifford F. Gray and Erik W. Larson – Project Management (3rd edition); TMH

Donald F. Kuratko and Richard M. Hodgetts – Entrepreneurship

(7th edition); Thomson Learning Gopalkrishnan & Ramamoorthy -

Text Book of Project Management; McMillan

Nicholas – Project Managemnt for Business and Technology

(2nd edition); Pearson Education Roy, Rajeev –

Entrepreneurship; OUP

WBUT/MBA/4th SEM
(4 Credit : 40 Hrs.)

[MB -402] : STRATEGIC MANAGEMENT

Module – I (20 hrs)

1. **Strategic Management :** Objectives, policies, Tools – Balanced Score Card, Strategic Management process. [4L]

2. **Environmental Scanning :** SWOT Analysis, External Environment Analysis (Economic, Legal, Govt, Political, Social, Geographic, Technical); Internal Environment Analysis - Strategic Advantage Factors (Finance, Market Production, HR, R & D, etc.) [4L]

3. **Strategic Planning :** Corporate; Functional and Managerial Goal Setting; Positioning Organization, Models for Resource Allocation, Environmental Turbulence Strategic Investment, Strategic Entry [6L]

4. **Formulating Strategies :** Corporate, Administrative/Executive and Operating Levels, Developing Functional Strategies – Production/Operations, Finance, Marketing, HR, Materials, R & D; BCG Matrix, Portfolio analysis. [6L]

Module – II (20 hrs)

5. **Implementation of Strategies :** Role of Managers, Leadership, Strategic Control System and Measurement, Structural Implementation, Functional Implementation. [6L]

6. **Strategic Actions :** Mergers, Acquisitions, Diversification, Joint Ventures, De-Merger [4L]

7. **Evaluation of Strategy** : Need, Problems, Criteria for Evaluation (Qualitative/Quantitative), Process of Evaluation [4 L]

8. **Case studies –** Strategic Planning and Management [6L]

Readings

Ansoff, H.I. & McDonnel, E.J. : Implementing Strategic Management, Prentice-Hall

Banerjee, Bani P. : Corporate Strategies, OUP

Das, Ranjan : Crafting the Strategy, Tata McGraw Hill

Kazmi, A. : Business Policy & Strategic Management, Tata McGraw Hill

Mellahi, K.,Frynas, J.G.& Finlay, P. : Global Strategic Management, OUP

Porter, Michael E. : Competitive Strategy, The Free Press

Roy, Dilip : Discourses on Strategic Management, Asian Books

COMPREHENSIVE Viva Voce

[MB-403] :

MBA Revised & Final Syllabus'2008(For the Batch starting from Academic year

Specializations

WBUT/MBA/4th SEM
(4 Credit : 40 Hrs.)

[MM -404] : INTERNATIONAL MARKETING

1	**Introduction**: Definition of international marketing, Domestic vs. international marketing, Benefits of international marketing, Process of internationalization, Marketing orientation of a firm	**3L**
2	**Trade Theories**: Basis of international trade, Principles of absolute and relative advantage, Factor endowment theory	**3L**
3	**Dynamics of World Market**: Identifying and satisfying global needs, Coordinating activities and recognizing constraints	**4L**
4	**Environment of International Marketing: Economic-cultural** – culture and its characteristics, influence of culture on consumption decisions, cultural universals, **Politico- Legal –** concept of multiplicity of political and legal environment, different political and legal systems	**4L**
5	**International Institutions**: (only the objectives) – WTO, World Bank, IMF, ADB, UNCTAD, EEC, SAPTA, NAFTA etc.	**3L**
6	**International Product Policy**: New product policy, International product life cycle, Product line policies, Branding, packaging and labeling	**4L**
7	**International Pricing Strategies**: Factors in pricing, Alternative strategies, Forfeiting, Transfer pricing, Dumping, Counter trade	**3L**
8	**Distribution**: Methods of entry into foreign markets, Foreign market channels, Global logistics	**4L**
9	**Promotion**: Global promotion mix, Standardized global communication	**2L**
10	**Foreign Exchange**: Concepts of spot rate, forward rate, arbitrage, translation; FEMA	**3L**
11	**Procedure of Foreign Trade and Documentation**: Process of importing and exporting, Documentation (only the purpose) – certificate of origin, bill of lading, mates receipt, letter of credit, line of credit	**3L**
12	**Case Study**	**4L**

Readings:

Black & Sundaram: International Marketing: PHI
Doole, J. & Lowe, R.: International Marketing Strategy; Thomson
Johansson, J.K., TMH
Joshi: International Marketing: OUP
Keegan: Global Marketing Management: Pearson
Lee, K. & Carter, S., Global Marketing management, OUP
Onkvisit & Shaw: International Marketing – Analysis & Strategy: Pearson
Paul, J,& Kapoor, R, International Marketing, TMH
Terpestra & Sarathy: International Marketing: Harcourt College Publishers

MBA Revised & Final Syllabus'2008(For the Batch starting from Academic year

WBUT/MBA/4th SEM

(4 Credit : 40 Hrs.)

[MM -405] : SERVICE MARKETING

1	**Service Marketing**: Introduction, Need and scope of service marketing, Reasons for growth of services, Contribution to economy, Different types of service sectors – traditional and new, Trends in service sector, Impact of technology on different service sectors	**4L**
2	**Service Concept**: Definition, Characteristics of services, Tangibility continuum, Marketing mix for services - product, price, place, promotion, physical evidence, people & process	**4L**
3	**Consumer Behaviour in Service Marketing**: Service Experience- moments of truth, customer needs, expectations, perceptions, zone of tolerance, customer satisfaction, understanding the differences among customers	**4L**
4	**Service Strategy Planning**: Understanding the customer and competition, Positioning services, Service triangle concept	**2L**
5	**Creating the Service Product**: Creating service product, Customer value hierarchy, Flower of service, Service product mix, Branding service products	**2L**
6	**Service Marketing Communications**: Elements of promotional mix for services	**1L**
7	**Pricing of Services**: Foundations of pricing, How service prices are different, Approaches to pricing	**2L**
8	**Distributing Services**: Distribution in service context, Direct channels, franchising, agents and brokers, electronic channels, Strategies for effective delivery	**2L**
9	**Designing and Managing Services**: Designing service delivery system, Service blue printing, Quality function deployment, Customer as co-producer	**2L**
10	**Managing Demand and Capacity**: Capacity constraints, Demand patterns, Strategies for matching capacity and demand, Wait lines and reservations	**2L**
11	**Planning the Service Environment**: Physical evidence, Servicescapes - types and role, customer response to environment, guidelines for servicescape strategies	**1L**
12	**Managing People**: Critical importance of service employees, Problems and difficulties of boundary-spanning roles, Strategies for delivering service quality through people, Service leadership and culture	**2L**
13	**Service Quality**: Service quality, Integrated Gap model - to identify and correct quality problems, Measuring and improving service quality	**4L**
14	**Different Services**: **N**ature and characteristics of financial, hospitality, health-care, educational & professional, logistics, entertainment services and their respective marketing-mix analysis	**2L**
15	**Building Customer Relationships**: Goals of relationship marketing, Understanding customer-firm relationships, Relationship value of customers, Customer profitability segment, Targeting right customers, Relationship development strategies, Relationship challenges, Life-time value	**2L**
16	**Case Studies**	**4L**

Readings:

Apte, G.: Service Marketing; OUP

Fitzsimmons, J A & Fitzsimmons, M J: Service Management; McGraw Hill
Gronroos, C.: Services management and marketing; Wiley
Haksever, C., Render, B., Russel, R., Murdick, R.: Service Management and Operations; Pearson
Lovelock, C., Wirtz, J. & Chatterjee, J.: Services Marketing; Pearson Education
Rao, K.R.M.: Services Marketing, Pearson Education
Srinivasan R.: Services Marketing; PHI
Verma, H.V. : Services marketing, Pearson
Zeithaml,V.A., Bitner, M J, Grembler, D.D. & Pandit, A.: Service Marketing;, TMH

WBUT/MBA/4th SEM
(3 Credit : 30 Hrs.)

[MM -406] :
CONSUMER BEHAVIOUR

1	**Introduction to Consumer Behaviour**: Defining consumer behaviour, Impact on marketing strategies, Current trends in consumer behavior	**2L**
2	**Consumer Decision Process**: Need recognition, information search, evaluation of alternatives, purchase decision, consumption and post-purchase evaluation, Variables that shape decision process- individual differences, psychological processes, environmental influences, Types of decision process – complex decision making, variety seeking, impulse buying, loyalty, degree of involvement in buying	**5L**
3	**Individual Characteristics**: Demographic and psychographic characteristics and market segmentation, Personality, personal values, lifestyle concepts and measurements	**3L**
4	**Consumer Perception**: Marketing stimuli and perception, Perceptual selection - organization, interpretation, selective perception process	**2L**
5	**Learning and Memory**: Information acquisition and processing, Learning elements, Theories, Memory processes	**2L**
6	**Consumer Motivation**: Nature and role of motives, Classifying motives, Motive arousal, Motivation and involvement	**2L**
7	**Self-concept**: Perspective of self, Consumption and self concept, Gender roles	**2L**
8	**Attitude**: Characteristics and functions of attitude, Attitude development, Attitude theories and models, Role of belief in attitude formation, Relationship of attitude and behaviour, Attitude reinforcement and change	**4L**
9	**Culture Subculture and Social Class**: Nature of culture, Cultural values, Changing values, Cross-cultural understanding of consumer behaviour, Types of subculture and their influence on behaviour, Nature of social class, Social stratification	**2L**
10	**Reference Group Influence**: Nature and types of reference groups, How groups influence individuals, Opinion leadership, Word-of-mouth, Innovation and diffusion	**2L**
11	**Family and Household**: Structural and sociological variables affecting families and households, Family life cycles, Role behaviour, Conflict resolution, Changing role of women, Children and household consumer behaviour	**4L**
12	**Models of Consumer Behaviour**: Nicosia, Howard-Sheth & EKB	**4L**
13	**Organizational Buying Behaviour**: Organizational buyers versus consumers, Factors influencing business buying, Types of buying situations, Organizational buying process	**2L**

14	**Case Studies**	4I

Readings:
Assael, H.: Consumer Behaviour & Marketing Action; South-Western
Blackwell, R.D., Miniard, P.W. & Engel, J,F.: Consumer Behaviour; South-Western Hawkins, D.I., Best, R.J.. Koney, K.A.& Mookerjee, A.: TMH
Kumar: Conceptual issues in Consumer Behaviors; Pearson Education Loudon & Bitta, Della: Consumer Behaviour; TMH
Shiffman & Kanuk: Consumer Behaviour; Pearson Education
Solomon, M. R., Consumer BehaviouR, Pearson Education

WBUT/MBA/4th SEM
(4 Credit : 40 Hrs.)

[FM -404] : FINANCIAL INSTITUTES AND MARKETS.

1. **Indian Financial System In India** : Financial Concepts, Financial Assets, Financial Intermediaries, Financial Markets, Classification, Components of Financial Market, Financial Instruments, Multiplicity of Financial Instruments. 3L

2. **Money Market :** Definition, Money Market and Capital Market and their Features, Objectives, Features of a Developed Money Market, Importance of Money Market, Composition of Money Market, Money Market Instruments, Structure of Indian Money Market, Features of Indian Money Market , Call Money Market, Recent Developments. 4L

3. **New Issues Market :** Relationship between New Issues Market and Stock Exchange, Functions of New Issue Market, Instrument of Issues, Players in the New Issue Market, Recent Trends, causes for Poor Performance - Suggestions. 2L

4. **Secondary Market :** Introduction, Control Over Secondary Market, Registration of Stock Brokers, Registration Procedure, Method of Trading in a Stock Exchange, Depository services, Emergence of NSE, Objectives, Features of NSE- Comparative analysis of BSE & NSE functioning 6L

5. **Securities And Exchange Board of India :** SEBI – Background, Objectives, Functions, Powers, Organization, SEBI and the Central Government , SEBI Guidelines for Primary Market , Secondary Market. 4L

6. **The Banking Sector** – Industry Overview – Financial statements and Analysis, Regulation of Commercial Banks, Prudential accounting Norms 4L

7. **The Insurance Sector** – Basic Principles of Insurance – components of insurance Market- The changing scenario of the Indian Insurance Sector 4L

7. **Mutual Funds** : Concept - Types - Nature – NAV – Trends in Indian Mutual Fund Market - SEBI & Mutual Fund. 4L

8. **Merchant Banking** : Concept -Types -Functions - Trends in Merchant Banking in India - SEBI & Merchant Banking. 4L

9. **Leasing & Hire Purchase Finance**: Definition of Leasing, Types of Lease, The Leasing Process, Definition of Hire Purchase, Rights of Hirer, Rate of Interest, Evaluation of Leasing & Hire Purchase as method of financing 2L

10. **Credit Rating Agencies** : Concept - Functions - Different Credit Rating Agencies - Popular Symbols - SEBI & Credit Rating. 2L

11. **Personal Financial Services** : Debit Card - Credit Card - Housing & Personal Loans. 1L

Readings :

Text:

Fabozzi: Financial Markets & Institutions, Pearson
Guruswamy: Fianacial services and Markets, Thomson Learning
Khan: Indian Financial Systems, Tata McGraw-Hill
Kohn: Financial Institutes and Markets, OUP
Pathak: Indian Financial System, Pearson

Reference:

- Fabozzi: Bond Markets, Analysis and Strategies, Pearson Education

WBUT/MBA/4th SEM
(4 Credit : 40 Hrs.)

[FM -405] :
INTERNATIONAL FINANCE

1. **International Dimensions of Financial Management** : The Emergence of the MNC, Nature of the MNC, Objectives of the Firm & Risk Management, Domestic Financial Management & International Financial Management. 2L

2. **International Monetary System**: History of International Monetary System, Present Day Currency Regimes, Regime Choices for Emerging markets, Birth of EMU and EURO 4L

3. **Balance of Payments (BOP)**: Principles of BOP Accounting, Components of BOP, Significance of 'Deficit' & 'Surplus' in BOP, India's BOP and Economic Performance, Capital Mobility and Capital Account Convertibility. 4L

4. **The Foreign Exchange Market, Exchange Rate Determination, and Currency Derivatives**: The Foreign Exchange Market – Functions, Participants and Transactions – Exchange Rates and Quotations – Indian foreign Exchange Market, Foreign Currency Derivatives – Currency Options , Futures, Forwards, Swaps – Foreign Currency Derivatives in India , International Parity Conditions – Purchasing Power Parity- Interest rate Parity, Foreign Exchange Rate Determination 8L

5. **Foreign Exchange Exposure & Risk Management**: Two dimensions of Foreign Exchange Risk (viz. Exposure & Unanticipated change in Foreign Exchange Rates), Types of exposure
Measuring and Managing Economic Exposure, Transactions Exposure & Translation Exposure : (a) internal hedging strategies. (b) External or market based Hedging strategies. 10L

6. **International Financial Markets** : International Banking & Money Market- International banking Services – Capital Adequacy Standards-International Money Markets, International Equity Sources - Global Equity Markets- Methods of Sourcing - Cross-listing in Secondary Markets- New Equity Issues, International Debt Sources- Debt Management and Funding Goals- International Debt Instruments- International Bank Loans - Euronotes- International Bond Market 4L

7. **Financial Management of MNCs :** Foreign Direct Investment and Cross- Border Acquisitions; International Capital structure and the cost of Capital- An Overview- Impacts of Internationalization on the Cost of Capital- Improving Market Liquidity- Overcoming Market Segmentation- Causes of Segmentation- International Diversification and the cost of capita l- International Cost of Capital Models- The Theory of Optimal Financial Structure- Impact of Internationalization on Optimal Financial Structure - Financial Structure of Foreign Affiliates;
Multinational Capital Budgeting- Capital Budgeting: An overview- Capital Budgeting for Foreign Projects - Two methods- Foreign Complexities- Parent vs project valuations; Multinational Cash Management- The Management of Multinational Cash Balances- Cash Management Systems in Practice- Transfer Pricing & Related Issues- Blocked Funds 8L

Readings :

Text:

- Apte, PG : International Financial Management, Tata McGraw Hill.
- Eiteman, Stonehill & Pandey: Multinational Business Finance, Pearson Education

- Eun & Resnick: International Financial management, Tata McGraw-Hill Jeff Madura: International Corporate Finance, Cenage Learning
- O' Brien: International Finance, OUP

Reference:

- Butler: Multinational Business Finance, Thomson Learning
- Hull: Options, Futures and Other Derivatives, Pearson Education

WBUT/MBA/4th SEM
(4 Credit : 40 Hrs.)

[FM-406] : DERIVATIVES AND RISK MANEGEMENT

Introduction- Forward contracts, Futures contracts, Options and other derivatives. 2L

Forward and Futures – markets; use of futures for hedging; Risk Management Using Futures and Forwards; pricing- Cost of Carry Model; interest rate futures 10L

Options – Markets; Payoffs; Risk Neutral Valuation; Binomial Option Pricing Model ; Black Scholes Option Pricing Model; Put Call Parity; Uses of Options; Option Strategies 12L

Management of market risk – Stop loss; Delta hedging; Theta; Gamma; Vega; Rho; Scenario Analysis; Portfolio insurance, VaR 8L

Other derivatives- Swaps, Warrants, Convertibles 4L

Risk Management in Financial Institutions – Overview of BASEL –II, Market Risk, Credit Risk and Operational risk elements 4L

Readings :

Text:

Chance: Derivatives & Risk Management, Thomson Learning
Dufobsky & Miller: Derivatives Valuation and Risk Management, OUP
Hull: Options, Futures and Other Derivatives, Pearson Education/PHI
Kumar: Financial Derivatives, PHI
Stulz: Risk Management & Derivatives, Thomson Learning
Varma: Derivatives and Risk Management, Tata McGraw-Hill

Reference:

Björk: Arbitrage Theory In Continuous Time, OUP, New York
Wilmott; Quantitative Finance, Vol I & II, John Wiley & Sons, New York

WBUT/MBA/4th SEM
(4 Credit : 40 Hrs.)

[SM - 404] : SOFTWARE MANAGEMENT

1. Introduction to Software Processes and Metrics, problems: **[2L]**
Goals and requirements of Software Development.

2. **Software Project Planning:** **[5L]**
Project Process Groups (Initiating, Planning, Executing, Controlling and Closing Processes).
Planning Activities – Schedule Development, Resource Planning, Cost estimating / Budgeting, Quality Planning, Human Resource Planning, Communication Planning, Risk Management Planning, Procurement Planning, Developing on Information Technology, Project Management Methodology, Software Project Management Plan (SPMP).
Change Control on Information Technology Projects.

3. **Project Scope Management:** **[2L]**

Definition, Project Initiation – strategic planning & project selection, Project Charters, the scope statement, Work Breakdown Structure - approaches (using guidelines, the Analogy Approach, Top – Down & bottom – up Approaches), Scope Verification and Scope change Control.

4. **Project Time Management:** **[4L]**
Project Schedule, Project Network Diagrams (AOA or ADM, PDM), Activity duration Estimating, Gantt Charts, Critical Path method , PERT.

5. **Project Cost Management:** **[6L]**
Importance, Basic Principles, Cost Estimating (Types), Techniques and Tools, Problems with Cost Estimates, Cost Control, Earned Value Management.
Estimation Techniques:
COCOMO (Basic, Intermediate & complete COCOMO Model)
Halstead's Software Science
Putnam Model
Jensen Model

6. **Quality Management:** **[6L]**
Quality Planning, Assurance & Control, Leadership - Cost of Quality, Organizational Influences, Work Place factors & Quality, Maturity Models.
[CMM, CMMi, Six Sigma], Zero defect, Quality assurance.

7. **Project Human Resource Management:** **[2L]**
Managing People (Motivation Theories, Influences & power, Improving Effectiveness), Organizational Planning, Staff Acquisition & Team Development.

8. **Project Communication Management:** **[2L]**
Importance, Communication Planning, Information Distribution, Performance Reporting, Administrative Closure.

9. **Disaster Recovery Planning & Risk Management:** **[4L]**
Importance, Risk Management Planning, Sources of Risk, Risk Identification, Qualitative & Quantitative Risk, Risk Response Planning , Risk Monitoring & Control.

10. **Change management:** **[2L]**
Configuration management, ITIL methodology

11. **Project Procurement Management:** **[2L]**
Importance, Planning , Solicitation Planning, Solicitation, Contract Administration & Close Out.

12. **Using Project Management Tool:** **[3P]**
MS Project 2000 / 2003. Case Study.

Suggested Readings:

Behforooz: Software Engg. Fundamentals, OUP
Hughes & Cotterell, Software Project Management: TMH
Mall, Rajib: Fundamentals of Software Engineering, PHI.
Maylor: Project Mgmt., Pearson Education
Pressman: Software Engineering, McGraw Hill
Schwalbe, Kathy: Information Technology Project Management, Thomson Learning.
Basics of Software Project Management: NIIT, PHI

WBUT/MBA/4th SEM
(4 Credit : 40 Hrs.)

[SM - 405] : E-BUSINESS

1. Electronic Commerce: [6L]
Overview, Definitions, Advantages & Disadvantages of E – Commerce, Threats of E – Commerce, Managerial Prospectives.

2. Technologies: [2L]
Relationship Between E – Commerce & Networking, Different Types of Networking For E – Commerce, Internet, Intranet & Extranet, Client – Server, Web – Server Architecture, Infrastructure Requirement For E – Commerce, Intelligent Systems.

3. Business Models of e – commerce: [6L]
Model Based On Transaction Type, Model Based On Transaction Party - B2B, B2C, C2B, C2C, Revenue based models, E – Governance.

4. E – strategy: [3L]
Overview, Strategic Methods for developing E – commerce, E-advertisement.

5. M-commerce: [3L]
Definition, Hand Held Devices, Mobility & Commerce, Mobile Computing, Wireless Web, Web Security, concepts of WAP.

7. Supply Chain Management: [4L]
E – logistics, Supply Chain Portal, Supply Chain Planning Tools (SCP Tools), Supply Chain Execution (SCE), SCE - Framework, Internet's effect on Supply Chain Power.

8. E – Payment Mechanism: [4L]
Payment through card system, E – Cheque, E – Cash, E – Payment Threats & Protections.

9. E – Marketing: [4L]
eShopping, Telemarketing.
Commercial packages for building eShopping portal e.g. One&One
Case study

10. Electronic Data Interchange (EDI): [2L]
Meaning, Benefits, Concepts, Application, EDI Model, Protocols (UN EDI FACT / GTDI, ANSI X – 12), Data Encryption (DES / RSA).

11. Risk of E – Commerce: [4L]
Overview, Security for E – Commerce, Security Standards, Firewall, Cryptography, Key Management, Password Systems, Digital certificates, Digital signatures.
Rules & Regulations For Controlling E – Commerce, Cyber Laws.

12. ERP [2L]
Evolution through MRP I and MRPII, Need Identification, Scope and Problem of ERP selection and Implementation, Products and Packages of ERP, Selection of EEP processes, Integrating ERP with other systems, Opportunities and benefits.
Case Study – BPR.

Suggested Readings:

Bhaskar Bharat : Electronic Commerce - Technologies & Applications.TMH
Christopher J. & Clerk T.H.K., Global E-Commerce, University Press
Joseph P.T. : E-commerce An Indian Perspective, PHI
Kalakota, Whinston : Frontiers of Electronic Commerce , Pearson Education.
Loshin Pete, Murphy P.A. : Electronic Commerce , Jaico Publishing Housing..
Reynolds, Beginning E-Commerce, SPD
Whiteley, David, E – Commerce : Strategy Technologies & Applications, Tata McGraw Hill.

WBUT/MBA/4th SEM
(4 Credit : 40 Hrs.)

[SM - 406] : FUNDAMENTALS OF NETWORKING

1. Communications: **[6L]**
[a] Need for computer networking, components of a data communication system, direction of data flow(simplex, half-duplex, full-duplex)

[b] Types of networks: LAN, MAN, WAN; concepts of Internet, Intranet, Extranet, WWW.
[c] Network topology, transmission media.
[d] Applications of networking in business and society.
[e] concepts of data transmission, signal encoding, modulation methods, synchronization, multiplexing and concentration, coding method, cryptography.

2. **Network:** **[10L]**
Communication system architecture – OSI reference model, Topology types, selections, design, Local area networks (LAN), CSMA / CD, token bus, token ring techniques, link level control (LLC) protocols, HDLS, analysis of protocols & performance,
concepts in network layer, switching techniques, routing methods (static & dynamic), concepts of ALOHA, MACA, MACAW protocols.
Concepts of Wi-Fi & Wi-Max.
Case study: telephone network and satellite network.

3. **TCP / IP:** **[4L]**
Session, Presentation and Application Layers functions.

4. **Networking and Internetworking devices:** **[2L]**
Introduction to repeater, hub, bridge, switch, router and gateway.
Case study: Office network

5. **Distributed Processing Potential:** **[5L]**
Client Server Computing, introduction to distributed database.

6. **Internet:** **[5L]**
Internet Protocols, IP addressing (IP4 + IP6), class & subnets (concept only), Internet computing, MPLS.

7. **Mobile Computing:** **[4L]**
Introduction to mobile technology, concept of GPRS, Wireless Application Protocols & other protocols, concept of bluetooth.

8. **Network Security & Privacy:** **[4L]**
overview, purpose, spamming , cryptography (ciphering, DES, RSA -concept only), authentication (concept only) and firewall.

Suggested Readings:
Comer : Internetworking with TCP / IP, Vol – 1, PHI/ Pearson Education Forouzan
: Data Communication & Networking, TMH.
Stallings, W., Data and Computer Communications, Pearson Education
Tanenbaum : Computer Networks, Pearson Education Zheng,Computer
Networks for Scientists & Engineers,OUP

WBUT/MBA/4th Sem
(4 Credits : 40 hrs)

[HR – 404] : INDUSTRIAL RELATIONS

Module – I (20 hrs)

1. **Industrial Relations** : Concept, Approaches to IR, Parties to IR, System Model of IR [4L]

2. **Industrial Worker in India** : Rise of Industrial Workers, Profile of Industrial Workers in India, Problems of Industrial Workers (absenteeism, commitment, Work Ethics) [2 L]

3. **Trade Unionism in India** : Origin, Growth, Structure and Management of Trade Unions, Recognitions, Leadership, Trade Unionisms, Employers' Organisations in India, Managerial Associations. [4 L]

4. **Industrial Relations in India** : Labour Policy in Five Year Plans, Tripartism, Role of Government and State, Role of Management, Role of Trade Unions. [6 L]

5. **Industrial Disputes :** Causes, Types, Trends and Settlement of Disputes (Internal Options, Third Party Machinery). [4L]

Module – II (20 hrs)

6. **Collective Bargaining** : Theories, Prerequisites, Process, Negotiating Skills and Strategies, Agreement – content, Validity, Implementation, Productivity Bargaining, Growth of Collective Bargaining in India. [4 L]

7. **Workers' Participation in Management** : Concept, Purpose and Practices in other countries; Workers' Participation Schemes in India – Works Committee, Joint Management Council, Worker – Director, Shop Council and Joint Council, WPM, EPM; Problems and Prospects in India; Quality Circles – Concept and Practices in India. [4 L]

8. **Labour Welfare and Industrial Relations** : Concept, Purpose, Statutory and Non-Statutory Provisions, ILO Conventions and its application in India, Workers' Education Programmes in India. [4 L]

9. **Employee Discipline** : Meaning Types, Misconduct, Disciplinary Action, Domestic Enquiry, Grievance Handling. [4 L]

10. **Case Studies -** Wage Negotiation, Disciplinary Action, Industrial Disputes [4 L]

Readings

Marchington, M. : Managing Industrial Relations, McGraw Hill.
Monapppa, Arun : Industrial Relations, Tata McGraw Hill.
Ramaswamy, E. A. : Managing Human Resources, Oxford University Press.
Venkata Ratnam, CS: Industrial Relations, OUP
Govt. of India : Report of the National Commission on Labour

(4 Credits : 40 hrs)

[HR – 405] : ORGANIZATIONAL DEVELOPMENT

Module – I (20 hrs)

1. **Organisational Change and Development :** Concept, History, Assumptions, Organisational Change, Process, Lewin's Model, Organizational Life Cycle, Values and Asumption of OD. [4 L]

2. **Operational Components of OD** : Diagnostic, Action and Process – maintenance component. [4 L]

3. **Characteristics and Foundation of OD Process** : On-going interactive process, Form of Applied Behavioral Science, Strategy of Changing, Systems Approach, Approach to Planned Change, Experience-based, Goal Setting and Planning, Focus on Work Teams. [4 L]

4. **OD and Action Research** : Process, Approach, Use of Action Research in OD. [2 L]

5. **OD Interventions** : Nature of OD Interventions, Major OD Interventions, Dimensions, Individual, Group and Task – Process, Effective OD Interventions – Characteristics, Factors for Design [6 L]

Module – II (20 hrs)

6. **Team Interventions** : Teams and Work Groups, Team Building Interventions, Diagnostic Meeting, Team Building Meeting, Role Analysis Techniques, Role Negotiation Techniques, Gestalt Orientation to Team Building, Intergroup Interventions. [6 L]

7. **Personal, Interpersonal and Group Process Interventions** : Process consultation, Third – Party Intervention, Sensitivity Training, Tansactional Analysis, Career Planning Interventions. [4 L]

8. **Comprehensive Interventions** : Confrontation Meeting, Survey Feedback, Four System Management, Grid, Contingency Approach. [4 L]

9. **Structural Interventions** : Job Design, MBO, QWL, Socio-technical Systems, Physical Setting, Conditions for OD, Re-engineering. [4 L]

10. **Issues in OD** : OD facilitators Role, OD consultant, Consultant – Client relationship, Problems in OD Interventions, Resistance – Individual and Organizational, Research in OD. [2 L]

Readings

French, W. L. & Bell, C. H. : Organisation Development, Prentice Hall of India./Pearson Education

French, W. L. & Bell , C. H. : Organisation Development and Transformation, Tata McGraw Hill

Gummings,T.G.& Worley, C.G. : Organization Development and Change, Thomson

Pareek, Udai : Understanding Organisational Behaviour, OUP

Robbins, S. P. : Organisational Behaviour, Prentice Hall of India./Pearson Education

WBUT/MBA/4th Sem
(4 Credits: 40 hrs)

[HR – 406] : HUMAN RESOURCE DEVELOPMENT

Module – I (20 hrs)

1. **Human Resource Development** : Meaning, Scope and Purpose, HRD Process, Techniques of Assessment of HRD Needs – Organizational Analysis, Task Analysis, Individual Analysis. [6L]

2. **Strategies of HRD**: Organizational Development, Individual Development, Team Development, Organizational Culture Building. [4 L]

3. **Individual Development through Training:** Designing Training Programme; On-the-Job, Off-the-Job; Methods – Lecture, Case Analysis, Role Play, Games, Exercises; Role of Trainer, MDPs, Out-Bound Training. [6 L]

4. **Evaluation of Training :** Need, Principles, Criteria, Technique of Evaluation, Impediments to Effective Training, Improving Effectiveness of Training. [4 L]

Module – II (20 hrs)

5. Individual Development through Non - Training - **Job Redesign Programme; Job Enlargement, Job Enrichment, Job Rotation, Suggestion Schemes, Career Planning, Counselling. [6 L]**

6. **Team Development Programmes** – Methods and Schemes : Role of Staff and Line Managers in HRD, Quality Circle, Kaizen, Autonomous Small Group Activities. **[4 L]**

7. **Competency Management –** Planning, Mapping, Measurement **[4 L]**

8. **HRD Experiments and Cases –** In India and Other Countries **[6 L]**

Readings

Desimone, R. L., Werner, J. M. & Harris, D. M. : Human Resource Development, Thomson.
Pareek, Udai & Rao, T. V.: Designing and Managing Human Resource Systems, Oxford & IBH.

Rajsekharan, N.P. : Competency Web, Universities Press

Rao, T. V. : Readings in HRD, Oxford & IBH.

Silvera, D. M. : Human Resource Development – The Indian Experience-Publisher

WBUT/MBA/4th Sem (4 Credits: 40 hrs)

[HSA – 4041 : Law

Law (HSA-404)

a) General Law of Contract: Essentials of a contract-offer & acceptance-capacity of parties-free consent consideration & legality of object-void agreement & contingent contract

b) Legal aspect & Consumer Protection Act: Introduction:-Medico-legal aspects on clinical practice-Duties and responsibilities of Doctors-professional secrets & privileged communication-consent-implied consent and expressed consent Consumer Protection Act-CP council-consumer dispute redressal agencies-Application of CP Act in Hospitals, important cases

c) Concept of confidentiality medical negligence, medico-legal cases attendance in court.

d) WB clinical Establishment ACT 2000 – Some provisions.

e) Biomedical waste management & handling rule-1998: Meaning, classification of bio-medical waste- treatment & disposal- colour coding & types of container for disposal of bio-medical Waste-Rules for Bio-medical waste management-Annexure of Ministry of Environment & Forest with regard to Bio-medical waste management & Handling Rule 1998(schedule 1 to 6)

f) Shops & Establishment Act in conjunction with Company Law :

Key Definitions, Nature of a hospital as a corporate entity and related issues as per latest amendments by the CLB (Company Law Board) Introduction to such principles as the Doctrine of Indoor Management.

g) Human Rights:

A brief introduction to Constitutional definitions of Fundamental rights and Directive Principles of State Policy as interpreted in conjunction with the health sector and its management.

Relevant United Nations covenants and resolutions specific to India. Protection of Human Rights Act 1993 Indian Medical Council profession conducts etiquette & ethnics regulation 2002. Role of Human Rights Commission and other relevant bodies for redressal of denial of treatment causing death or permanent impairment.

h) Insurance :

Role of carrier drugs, auto-immune and metabolic diseases

1) Life Insurance

2) Medical Insurance: Role of Mediclaim policies, causa proxima, insurable interest issues.

Issue of quantum of contribution. Explanations of useful terms: Premium, Double Insurance, Re- insurance policies etc. Current issue of claim settlement through Third Party in concerns like National Insurance Co., New India Assurance, United India Assurance etc. Role of Insurance Regulatory and Development Authority Act 1999 Demerits: Subversion of claims by claiming pre-existing diseases or disorders in current cashless settlements. Cost, health promotion etc.

h) Organ Transplant Act, MTP Act regulation of pre-natal diagnostic tests, rules relating to blood bank.

WBUT/MBA/4th Sem (4 Credits: 40 hrs)

[HSA – 4051 : Planning, Organizing & Management of Health Service

Planning, Organizing & Management of Health Service (HSA-405)

a) Planning & Designing of a Hospital:- Prerequisites, Layout & Architecture, Designing for Common use areas, rest & recreational facilities & residential accommodation-Legal requirements, Project Management & implementation. GANTT CHART

b) Organization of technical, clinical & support Services,

c) Management techniques: Qualitative and Quantitative

d) Problems in managing Hospitals- internal& external –Remedial measures

e) Organization, Staffing, Coordination & Cooperation

f) Planning & Managing Resources & their optimum utilization

g) Management of Social Services-Management of NGOS, Community Health workers, Disaster Management, Mass Casualty Management

h) Management of information system (MIS) in health care.

i) Quality Management in health care organization.

WBUT/MBA/4th Sem
(4 Credits: 40 hrs)

[HSA – 4061 : Logistics Management in Healthcare Units and Storage & Distribution

Logistics Management in Healthcare Units and Storage & Distribution (HSA-406)

a) Logistics: Principles, Components, Importance in Healthcare units, Logistic supplies, services & users.

b) Material requirement planning: Methods of forecasting requirements of materials related to Healthcare & Auxiliary services, planning, budgeting& controlling

c) Inventory Control & Management in Healthcare Units

d) Procurement: Principles of sourcing, purchasing methods, reference to legal aspects of purchasing

e) An overview of law of contracts Sales of Goods Act, Drug Control Act Highlighting the general features of the Acts (No clause by clause study)

f) Principles of Storage and Stores accounting-Types of Storage - Care and preservation of materials and equipment inventory control

g) Distribution Management- Distribution to various departments and auxiliary services.

h) Contracts Administration-Model contract for different services i.e. Laundry, Dietary, Dispensary, Security and Ambulance Services. Annual Maintenance Contract

Specialisation on Sustainable Development (SD)
WBUT/MBA/3rd SEM
(4 credit : 40 Hours)

WBUT/MBA/4th SEM
(4 credit : 40 Hours)

[SD 404] : Sustainable Livelihood for Sustainable Development

Course Content

1. **Sustainable livelihood** – concept of livelihood, livelihood vis a vis wage earning, Livelihood and income generating activities, five capitals for sustainable livelihood framework (2L)
2. **Production systems for livelihood–** Different production systems: agriculture, horticulture, sericulture, forestry, animal husbandry, dairying, fisheries and off farm activities, their linkages with livelihoods, food security, livelihood security and sustainable livelihoods, Scale of production, rural infrastructure, marketing network, dependence on middlemen, collective bargaining power, control over market and price premium, quality issue and ensuring traceability of the products from source to the point of sale (5L)
3. **Natural capital for livelihood** – Processes and relationships among agro climatic and natural resources as natural capitals, Methods for identification of existing natural capitals, their use pattern and outputs, , management interventions for improving the natural capital (4L)
4. **Human Capital for livelihood** - Human resources, Indigenous Technical Knowledge and skills, gender relations and roles (2L)
5. **Social Capital for livelihood –** Social network, pluralism, community based organizations and voluntary organizations, conflict management (2L)
6. **Physical capital for livelihood –** infrastructure, communication network, marketing network (2L)
7. **Financial capital for livelihood –** linkages with financial institutions, MFIs, networking with SHG federation (2L)
8. **Concept and approaches of microplanning and sustainable livelihood planning –** Concept of microplanning, participatory methods and tools including PRA tools for microplanning, steps for microplanning, feasibility analysis, cost benefit analysis; steps for sustainable livelihood planning (5L)
9. **Monitoring and evaluation of the microplans and livelihood plans -** Methods for participatory monitoring and evaluation, developing participatory indicators, social audit (3L)
10. **Rural Legal Support System –** Right to Information Act, Consumer Protection Act, Tribal Forest Act, recent development in alternative dispute settlement mechanism (3L)
11. **Field study in selected village, preparation of case study and Demonstration of the steps of microplanning and livelihood planning in selected villages** (10 contact hours)

Readings

1. Prabhu Ghate: Indian Microfinance, Sage Publications
2. Garry Paul Green and Anna Haines: Asset Building and Community Development, Sage Publication
3. Ajit Menon: Community Based Natural Resource Manegement, Sage publication
4. Microplanning Manual, IBRAD

WBUT/MBA/4th SEM
(4 credit : 40 Hours)

[SD 405] : Agribusiness for Sustainable Development

Course Content

1. **Introduction to agri business –** scope, nature and significance of agri business, agro industries, national agricultural policy, WTO, agricultural patenting (3L)
2. **Farming systems and agro industries –** Corporate, contract, precision; sugar, oilseeds, dairy processing, seed, fertilizer, horticulture, floriculture and medicinal plants (4L)
3. **Farm Management** - meaning, definitions, principles, production, farm records, farm planning, farm budgeting, laws of return, optimal factor combination (4L)
4. **Demand forecasting and break even analysis**- determinants of demand for agri products, regional and international dimension of demand, supply management - determinants of supply, cost concepts. **Break even analysis**: concept, role in farm management (4L)
6. **Crop Planning -** production, planning, resource planning. (3L)
7. **Labour Management and Profitability analysis -** livestock management, farm waste management (3L)
8. **Marketing of agricultural produce** – marketing function, marketing channels, standardization of products, packing and transport, agricultural regulated marketing, agricultural cooperative marketing, crop insurance and Kishan Credit Cards (4L)
9. **Rural Banking** – Cooperative banking, NABARD, lead bank scheme, domestic cash management, cash flow budgeting and forecasting, capital budgeting, liquidity management (3L)
10. **Case studies and market study** (12 contact hour)

Readings

1. Desai R.G., Agricultural Economics, Himalaya Publishing House, Nagpur

2. Memoria, C.B. Agricultural Problem of India, Kitab Mahal, New Delhi
3. Various Reports of APEDA, National Horticulture Board (NHB) & Director of Horticulture
4. S.S. Acharya and N.L. Agrawal Agricultural Marketing in India
5. R.K. Tandon and S.P.Dhondval. Principle and Methods of Farm Management
6. Saxena H.M., Ragulated Agricultural Markets
7. Mathur, Co-operation in India
8. Chatterjee, A., Bank Credit Management.
9. Choubay, B.N., Principles and Practice of Co-operative Banking
10. Basu, A.K., Fundamentals of Banking Theory and Practice

WBUT/MBA/4th SEM
(4 credit : 40 Hours)

[SD 406] : Participatory Approaches, research methods for Sustainable Development

Course Content

1. **Approach in research towards sustainability** - what is sustainability research – holistic and interdisciplinary approach, integrated economy – ecology models (2L)
2. **Participatory Approaches** – Participatory Rural Appraisal, Participatory Learning Methods, Participatory development methods and approaches (4L)
3. **Quantitative and qualitative Analysis for sustainability research** - quantitative and qualitative methods for understanding rural society, Problem identification and formulation in the rural context, village study approaches including field research methods, participatory monitoring and evaluation framework, social audit (6L + 2P)
4. **Project appraisal** including social analysis, cost benefit and feasibility analysis, monitoring and evaluation (6L+2P)
5. **Project Management**- Effective Management and Planning Tools- SWOT Analysis, LFA, CPM/ PERT, and their application in the rural context (6L + 2P)
6. **Application of IT for project management** - Basic Computer Application- Windows Operation; Microsoft Office Package- Word, Power Point, Electronic spreadsheet (Excel), DBMS (Access), SPSS, GIS (Arc GIS), internet and web page design (4L + 6P)

Readings

1. R. Panneerselvam: Research Methodlogy, Prentice Hall of India
2. Bill Taylor, Goutam Sinha and Taposh Ghoshal: Research Methodology: A guide for Researchers in Management and Social Sciences, Prentice Hall of India
3. Bhattacharya, Fundamentals of PERT/CPM and Project Management, Khanna Publishers
4. Chopra Kanchan & Gopal Kadekodi: Operationalising Sustainable Development, Sage Publications

M.B.A. in Shipping Management (SHM)

SHM 401 – Ship Operation Management **WBUT/MBA/ 4th Sem**
(4 Credit : 40 Hours)

1. **Introduction : [2 L]**
   Different types of voyages, Runs, Different crew nationalities, Elements of ship operation and their impacts in a voyage, Role of a Ship Manager.
2. **Materials & Maintenance : [4 L]**
   ISO 9000, ISO 14000, Inventory control, Cost effectiveness, Quality bench marking for company & Ships .
3. **Shipping Organization : [2 L]**

Organizational hierarchy & function in a shipping office, Agencies & ships

4. **H.R. management : [2 L]**
   Manning, Planning & problems in ship manning, Performance Management, Contract, Shipping Communication
5. **Exigency Management : [4 L]**

Accidents, Arrests & Detention, Deaths & Delays, Crisis, Case Studies.

6. **Other Managements : [6 L]**
   Strategic, Managerial, Marketing, ISM & Other Audits ,Change of business face, Ship procurement & sale,Case Studies.
7. **Co -ordination : [2 L]**
   With Flag State, Port State Control, Classification Societies, Owners (incase of management of ships), Port Authorities , Agents, Bunkers, Charteres , Insurers, Sub Charterers , Co Adventurers , Financial Institutions etc, Importance & Implications.
8. **Evaluation & Trend Forecasting : [6 L]**
   Evaluation of performance report of a ship against a voyage / over time , Utility & redundancy , Interfacing appropriate ships for identified Voyages, Loss & profit against a vessel, Planning for new ship procurement, ship acquisition & Phasing out of old ships
9. **Ship Operation Criteria : [6 L]**
   Ship Hiring / & commissioning on Charter Procedures, temping, liner services, evaluation of ships performance in a voyage, choice of proper ships for proper voyage, Elements of Technical Planning, procurement of ships from ship yard, extending life of the ship, lay off procedures.
10. **logistic chain management in shipping : [6 L]**
    Elements and criteria of logistic chain management, importance of proper interfacing, role of bunkering ,spares , surveys, Audits, manning, loading/unloading, repairs, arrival/departure, communication, freight forwarding, stevedoring, role of agents and other parties, Port Authorities, etc, logistic requirement in case of door-to-door operation, exigencies and limitation effecting performance.

Suggested Readings

[1] Elements of Shipping : Alan E. Branch - Chapman & Hall

[2] Neil Cockett on Bunkers : Neil Cockett - LLP, London

[3] Sea Transport Operation & Economics : R.M. Alderton - Thomas Reed Publications, London

[4] Marine Transportation Management : Henry S. Marcus - Croom Helm, London/Auburn House Publishing Company

[5] The Shipping industry (The Technology & Economics of Specialization) : E.J. Gubbins - Transportation Studies - Gordon & Breach

SHM 402 – Maritime Financial Management **WBUT/MBA/ 4th Sem**
(4 Credit : 40 Hours)

1. **Introduction : [6 L]**
   Shipping Financial Markets (Private & Public), Specific financial aspects, Need for shipping practice, Importance of Govt. Policies, International Banking & Credit System, features, limitations and forgery, current developments,
2. **Maritime Finance Principles (I) : [2 L]**
   Demands in Shipping Management, Meaning of different demands, Law of Diminishing Marginal Utility, Demand Elasticity, Demand for Shipping Services.
3. **Maritime Finance Principles (II) : [2 L]**

Supply in Shipping, Introduction, meaning, Supply Schedule, Elasticity of Supply, Supply of Shipping Services.

4. **Maritime Financial System : [6 L]**
   Documentary credit system, Charter contracts & payments, receipts, lump payments and receipts, non-payments and non-receipts, recovery, procedure of redressal, identification and preparation of financial terms in shipping documents in case-to-case basis.
5. **Budgeting and Accounts : [8 L]**
   Capital Cost, Running and voyage costs, other accessories cost, Hidden & Pronounced Cost, Budgeting & Account keeping, Taxes–Exemptions-Benefits-Returns , Preparation of Balance Sheet, Evaluation and identification of areas for improvement, Case Studies.
6. **Pricing in Shipping : [6 L]**
   Commodities and freight, Monopoly, perfect competition, Imperfect Competition, Pricing of Shipping Services, upward and downward swim of pricing, Global influencing criteria, Freight Forecasting & computation, Case Studies.
7. **Shipping Conferences : [2 L]**
   Important Liner conferences & its Implications, Other Allied Conferences, State & International Conferences, Implications of Conferences on Shipping Finance.
8. **Shares & dividends : [6 L]**
   Introduction, Private & Public Shares, Holding Rights, Sale and Purchase of Shares, Dividend Making Procedures, Advantages & Risks, Other Investments, Shipping Loans & Recovery Procedures, Floating of New Shares, Case Studies.
9. **International Currency Influence : [2 L]**
   International currency fluctuations & its effect on Ship Operation & Management, Situation in World Crisis, Other International Factors influencing pricing, Countering Strategies.

Suggested Readings

[1] Transport System Optimization & Pricing : Jain Owen Jansson - John Wiley & Sons

[2] Sea Transport Operation & Economics : R.M. Alderton - Thomas Reed Publications, London

[3] Understanding Freight Business : J.M. Fetherston O.B.E. - Thomas Meadows & Company Limited

[5] Vessel Operating Economics : C.A. Lawrence - Fairplay Publications, U.K

[6] United Kingdom International Council, Freight Forecasts : S.V.Allera J.E.Parsons R.H.Fenyoe : National Port (U.K.)

SHM 403 – Maritime HR Management **WBUT/MBA/ 4th Sem**

(4 Credit : 40 Hours)

1. **Global Update : [2 L]**
   ISF / BIMCO Record update & comparison of world maritime manning scenario.
2. **Special Requirements for Sea Farers : [4 L]**
   Different job situation and working hours, Special Attitude Requirement, On Board Manning hierarchy for offices and crews, other technical qualifications as per International guidelines, Certificates of Competencies and other Professional Certificates, minimum requirement for voyage qualification, Minimum facility requirements of Seafarers under ILO,
3. **Recruitment and Planning : [4 L]**

Procedure of Recruitment and other qualification requirement for specific posts, recruitment criteria for different vessels, importance of experience Standby & wastage computation, pre planning against company policies, dispensation, Criteria for Retention, Different Issuing Authorities of Certificates and its acceptability under I.M.O.

4. **Manning Market : [4 L]**
   Different Global Manning Market, Trend & shift of Focus, Advantages and Disadvantages, Relevant State and International Laws and Rules in Employing National & Foreign Manpower, Specific demands of OECD Countries, U.S., Europe continent and South East Asian Countries, Current and Future Trend, Cost Evaluation.
5. **Performance Evaluation : [2 L]**
   Performance Appraisal, record keeping, suitability of specific groups for specific vessels, Promotions and Incentives on Performances.
6. **Multinational Crew Management : [6 L]**
   Competence Level and Character traits of different nationalities, cultural differences, Problems arising out of difference in inter cultural and inter personal relationships, Address of the Situations, Training of Zohri's window and other Management Principles of Offices & Crews, Case Studies.
7. **Crisis management in manning : [6 L]**
   Reasons for Short Supply or over flow in Manning, Minimum Certification Requirement for International Voyages, Strategic Planning, Reasons for Human conflicts on board , Selection from surplus, Different Unions & their Roles , Choice of Ship Owners for Crew, Crew performance study--- availability & planning of suitable placement, Traits & competency,
8. **Certification: [2 L]**
   Different certificate of competencies & its suitability (Indian, Panamian, Liberian, U.K. / Commonwealth etc.)
9. **Unions and Associations : [4 L]**
   Different unions / associations, General working, Procedure to address demands & claims, Rights and Limitations of Unions, Claims and Compensation
10. **Ancillaries : [2 L]**
    Different world shipping managing bodies (FOSMA, MASSA, INSA etc.), IMO STCW Convention & its update, Shipping Communication System types, Back feed & its importance, Important factors influencing communication from ship to shore & vice versa, follow up on personnel feedback
11. **Personnel Management: [4 L]**
    Appointment, Leave, Resignation, Promotion, Deputation, Entitlement, Provident and other Welfare Funds, Applicable Taxes and Benefits, Maintaining Roster, Salary Structure.

Suggested Readings

[1] **ISF/BIMCO Periodicals**	**:** ISF/BIMCO	- ISF/BIMCO Publication
[2] **MS Notice, Circulars :**	Directorate General of Shipping	- Ministry of Shipping, Govt. of India
[3] **STCW'95 Compilation**	**:** International Maritime Organization	- IMO (UNO), London.
[4] **Different Bulletins of the different Associations/Unions**	: Different Associations/Unions	- Indian National Ship Owners' Association (INSA), FOSMA, MASSA, NUSI etc.

PORT & LOGISTIC MANAGEMENT (PLM)

PLM 401 – Commercial Shipping **WBUT/MBA/ 4th Sem**

(4 Credit : 40 Hours)

1. **Introduction : [2 L]**
   Shipping commerce & its movement across global scenario.
2. **Commodity Analysis : [4 L]**

Maritime Trade / Commodity Analysis, Specificity & Features of Ports for handling specific cargoes, Global & National Situation, Modalities for improvement.

3. **Import / Export : [6 L]**
   Procedure, involvement of different parties, pricing & taxes, risk management, role of ship owners and ports, Case Studies.
4. **Privatization : [4 L]**
   Privatization & port financing post liberalization scenario in India, Advantages & Disadvantages, Premier Global Private Ports, Role & Rights of Government in Private Sector vis-à-vis improvement and management,.
5. **Berth Management : [6 L]**
   Berth management, Loading / Unloading management, Time management, Logistic Chain Management, Ware House Management, Loading Discharging Time Sheet, Case Studies.
6. **Port Operation & Management : [6 L]**
   Port commodity dynamics & its influence on port operation, active players/bodies in Port Operation, effective communication management, extra ordinary requirements in case of special cargo ports or management of special cargo, highlights and lows of Port Operation Management, Importance of Dredging, Role of Support Vessels, Case Studies.
7. **Extraordinary Management : [4 L]**
   Specificity Management/ Dangerous cargo management (storing / loading / unloading)/ Commissioning management of new ports/ Riverine Port Management, Accident Management, Stow-aways Management.
8. **International Trade : [4 L]**
   Theory of International Trade , Free trade & protection, Balance of Trade & Balance of protection, effect of SEZ and EEZ on Port Sector.
   Important Ocean Routes of the World.
9. **Ship Management at Port : [4 L]**
   Load Line /Tonnage measurement, Ship's papers , Statutory Documents & Office Papers , Record keeping, Procedure on Arrival & Departure, Identification and Verification of Ship & Personnel, Evaluation of Port- Stay, Congestion Management, Operation Practices at Premier Ports around the world.

Suggested Readings

[1] **Efficient Port** **:** R.B. Oram & C.C.R. Baker - Pergamon Press, OXFORD

[2] **Port Management: & Operation** Prof. Patrick M. Alderton - LLP, London/Hongkong

[3] **Elements of Export Practice** : Alan E. Branch - Chapman & Hall, London

[4] **Capital Dredging** **:** Institution of Civil Engineers - Thomas Telford, London

[5] **Elements of Export – Marketing Management** : Alan E. Branch - Chapman & Hall, London

WBUT/MBA/4th Sem (4 Credit /40hours)

PLM 402 – Cargo Handling Systems Management

1.0 Cargo Handling Equipments : [8L]
Introduction, Factors Determining type of cargo handling equipments , conventional break-bulk handling , Types of general cargo handling equipments , Unitized Cargo Handling Systems ,

2.0 Associated Cargo Handling Support :[6L]
LASH (Lighter Aboard Ship) , Roll on / Roll off (Ro / Ro) Vessels , Container Handling Equipments (Palletisation , Containerisation , Lifters & Movers , Back up systems , Container Cranes) Stowage within container ,

3.0 Stowage Planning :[6L]
Type of Cargoes , Stowage Factors , Pre Shipment Planning , Stowage Plan & Onboard Stowage , Ship Stresses & Stability

4.0 Developments & Quality Standards :[6L]

Developments in Cargo Handling & Terminal Operations , Benchmarking for Quality Standards , Facts Concerning Containers – Equipment Development and Control ,

5.0 Equipments Control & Warehousing : [6L]

Cargo Security & Warehouse Technology , Purchase Maintenance & Control of Equipments ,

6.0 Cargo Control & Safety :[8L]

Port time & cargo handling speed , General Operational Delays , Weather delays , Congestion , Compensation , Port Productivity , Classification & Safety of cargo ,Case studies

Suggested Readings

[1] Progress in Cargo Handling : Chris Baker : Gower Press (U.K.)
[2] Port Management & Operations : Prof Patrick M. Alderton : LLP, London
[3] Shipping Practice : Edward F Stevens : Sir Issac Pitman & Sons , London
[4] Shipping & Management : Alan E Branch : Chapman & Hall
[5] Shipping Industry – (The Technology & Economics of Specialisation) : Edmund Gubbins : Gordon & Breach

WBUT/MBA/4th Sem (4 Credit /40hours)

PLM 403 – Port Modernisation & Traffic Forecasting

1.0 Port Development Project : [8L]

Port development Management (the need, short term & Long term Planning, sequence of Investment,Project Planning feasibility study, Project control, Use of consultants, UNCTAD assistance, Port development finance, Procedure for implementation of port projects, participation of project planners), Case Studies

2 .0 Planning Aspects & Economics : [12L]

Planning principles (Port Planning Objectives , the investment plan, Terminal design principles, berthing capacity planning constraints, Cost considerations, berth occupancy, waiting time- Service time Ratio,Planning for Variation in Traffic, Co-ordinated Contigency Planning, The Economic optimum, Scheduled traffic, Seasonal variations, Seasonal variations, capacity & Traffic specialization, Flexibility & Technical changes, Principles of Investment appraisals, Financial analysis, Economic appraisal, Cost-Benefit-discounts, Congesation Cost pitfalls, Evaluation Summary Methods, Four Investment Decisions), Case studies

3.0 Traffic Forecasting : [8L]

Traffic forecasting (Forecasting Principles, Scenario writing, Control Statistics, Forecasting procedure, market Forecast, Rate of Growth, Port Policies, Trend Forecasting, Uncertainty factors , Forecasting Traffic of Various type of vessels , Hinter land Changes, Evaluation of forecasts), Case studies

Port Operation Development : [12L]

Productivity & Operational Planning, Master Planning & Port Zoning, Different Aspects of Port planning (Nautical, Civil, Environmental & safety), Terminal/Berth development considerations (Break bulk , Container, Multipurpose, Dry & Liquid Bulk , Ro/Ro etc),Case studies

Suggested Readings

[1] Applied Transport Economics : K.J.Button & A.D.Pearman : Gordon & Breach Science Publications
[2] Traffic System Analysis : Martin Wohl & Brian V Martin : Mc Graw Hill Book Co.
[3] Basic Statistics for Business & Economics : Leonard J. Kazmier : McGraw Hill Book Company
[4] Planning & Control Theory : M.J.Manohar Rao. : Himalaya Publishing House , Mumbai
[5] Port Management & Operations : Prof P.M.Alderton : LLP , London

General Guidelines

- This MBA curriculum will be applicable from the academic year 2018 – 19.
- All rules and regulations regarding admission, examination, registration, migration and others shall be according to MAKAUT norms.

CURRICULUM

Core Courses (Six / Semester)

Semester – I

MB – 101 Managerial Economics (Micro) MB – 102 Organizational Behaviour
MB – 103 Business Communication
MB – 104 Legal and Business Environment(Micro and Macro) MB – 105 Indian Ethos and Business Ethics
MB – 106 Quantitative Techniques

Semester – II

MB – 201 Indian Economy and Policy
MB – 202 Financial Reporting,Statements and Analysis MB – 203 Marketing Management
MB – 204 Operations Management
MB – 205 Management Information System MB – 206 Human Resource Management

Semester - III Core Papers:

MB – 301 Entrepreneurship and Project Management MB – 302 Corporate Strategy

Elective Papers: Two from any one Functional Area (Major) and two from a different Functional Area (Minor)

FM/ MM/HR/OM/BA/ MIS/ HCM– 301 FM/ MM/HR/OM/BA/ MIS/ HCM – 302 FM/ MM/HR/OM/BA/ MIS/ HCM – 303 FM/ MM/HR/OM/BA/ MIS/ HCM – 304

MB – 303 Internship Project and Viva Voce

Semester – IV

Elective Papers (Four from Major Functional Area and Two from Minor Functional area) **

FM/ MM/HR/OM/BA/ MIS/ HCM – 401

FM/ MM/HR/OM/BA/ MIS/ HCM – 402 FM/ MM/HR/OM/BA/ MIS/ HCM – 403 FM/ MM/HR/OM/BA/ MIS/ HCM – 404 FM/ MM/HR/OM/BA/ MIS/ HCM – 405 FM/ MM/HR/OM/BA/ MIS/ HCM – 406

****The Major and Minor Functional areas will be same as chosen in the 3rd Semester.**

Elective Papers for Third Semester

Functional Specialization (3rd Semester)

MARKETING		OPERATIONS	
CODE	**COURSE NAME**	**CODE**	**COURSE NAME**
MM 301	B2B MARKETING	OM 301	SUPPLY CHAIN & LOGISTICS MANAGEMENT
MM 302	DIGITAL & SOCIAL MEDIA MARKETING	OM 302	OPERATIONS STRATEGY
MM 303	IMC/ PROMOTION STRATEGY	OM 303	QUALITY TOOLKIT FOR MANAGERS
MM 304	MARKETING RESEARCH	OM 304	PRICING & REVENUE MANAGEMENT

FINANCE		HUMAN RESOURCE	
CODE	**COURSE NAME**	**CODE**	**COURSE NAME**
FM 301	TAXATION	HR 301	TEAM DYNAMICS AT WORK
FM 302	PROJECT APPRAISAL & FINANCE	HR 302	HR METRICS AND ANALYTICS
FM 303	BEHAVIORAL FINANCE	HR 303	CROSS CULTURAL MANAGEMENT
FM 304	CORPORATE FINANCE	HR 304	ORGANIZATIONAL DESIGN
MIS		**BUSINESS ANALYTICS**	
MIS 301	DATA MINING FOR BUSINESS DECISIONS	BA 301	DATA MINING
MIS 302	E-COMMERCE & DIGITAL MARKETS	BA 302	MARKETING ANALYTICS
MIS 303	MANAGING SOFTWAREPROJECTS	BA303	BUSINESS FORECASTING
MIS 304	DATA SCIENCE USING R	BA 304	DATA SCIENCE USING R

Director
Siliguri Institute of Technology

MAULANA ABUL KALAM AZAD UNIVERSITY OF TECHNOLOGY, WEST BENGAL

MBA PROGRAMME

(Revised Curriculum – 2018)

Objective

To conduct business and industry - oriented MBA Programme following AICTE Model Curriculum for Management (MBA & PGDM), 2018.

Course

- Two – Year full-time MBA course (Four – Semester).
- Minimum number of class room contact teaching for MBA/PGDM programme should be 96 credits (one credit equals 10 hours) and Internship / Project should be 06 credits i.e., Total 96 + 06 = 102 credits.
- Specialization: Students can opt for any two functional specializations (One Major Area and one Minor Area) from Marketing, Finance, HRM, Operations Management, Healthcare Management, MIS and Business Analytics
- Each Paper = 4 credits (40 contact hours), 6 Papers / Semester
- Marks per paper: 100 (70 – University, 30 – College)

Course Structure

- **Regular Course**

Semester	Paper	Credit (1=4 credit)	Contact Hrs. (1 = 10 hrs.)
I (C*)	6	24	240
II (C*)	6	24	240
III (2 C*+4 E**)	6	24	240
Internship/Project #	2	6	60
IV (6 E**)	6	24	240
Course Total	**26**	**102**	**1020**

(# Project: Project Paper + Presentation + Viva) (C*:

CORE PAPERS/E**: ELECTIVE PAPERS)

- **On – Line Courses** (Non-credit, Paper & Marks to be mentioned in the Mark sheet)

- Total : 4(1/Semester)
- Weightage : 4 Credits / Paper = 04 X 4 = 16 credits
- Courses (any 4): Environment Sciences, Indian Society & Culture, Indian Constitution, Entrepreneurship, English Communication, Data Mining, E-Commerce, Agri-Business, Hospitality Management, Small Business Management, Corporate Social Responsibility.

- **Total Credits**:

Regular	:	102
On-Line (Non-Credit)	:	16

Session

- July – December (Odd Semesters / 1st & 3rd)
- January – June (Even semesters / 2nd & 4th)
- Class / Day : 5 hrs / Day (5 days week)
- Project Work : after 2nd Sem Examination, June & July (8 Weeks)

Examination System (Semester – Wise)

- Total Marks = 100 (University – 70, College – 30)
- Internal (College level) : Weightage : 30 (20-Class Test, 10-Presentation & Viva)
- Paperwise Class Test = 2 Tests / every Six weeks
- Average of 2 internal tests (2 components – Test, Presentation& Viva)
- External (University Level) : 70 (20 = MCQ, 20 = Short Q, 30 = Analytical Q and Cases)
- Semester Grade Point Average : SGPA
- Yearly Grade Point Average: YGPA
- Degree Grade Point Average : DGPA
- Odd Semester (1st & 3rd) Examination : 1st Week of December
- Even Semester (2nd & 4th) Examination : 1st Week of May
- Project Marks (100) : Project Report (50), Presentation (30), Viva (20)
- Passmarks : 40 per paper, 50% aggregate

Teaching Methodology

Lecture, Discussion, Presentation, Case Studies, Group Task, Assignments, Projects, Special Lectures by industry professionals.

Internship / Project

Six to Eight weeks Internship Project in industry. Students will be required to submit a Project Report on any area of Elective courses (**Finance, Marketing, HRM, Operations Management, Business Analytics, MIS, Healthcare Management**) under the Faculty guidance. The Project will be examined on Project Report, Presentation and Viva.

General Guidelines

- This MBA curriculum will be applicable from the academic year 2018 – 19.
- All rules and regulations regarding admission, examination, registration, migration and others shall be according to MAKAUT norms.

CURRICULUM

Core Courses (Six / Semester)

Semester – I

MB – 101 Managerial Economics (Micro) MB – 102 Organizational Behaviour
MB – 103 Business Communication
MB – 104 Legal and Business Environment(Micro and Macro) MB – 105 Indian Ethos and Business Ethics
MB – 106 Quantitative Techniques

Semester – II

MB – 201 Indian Economy and Policy
MB – 202 Financial Reporting,Statements and Analysis MB – 203 Marketing Management
MB – 204 Operations Management
MB – 205 Management Information System MB – 206 Human Resource Management

Semester - III Core Papers:

MB – 301 Entrepreneurship and Project Management MB – 302 Corporate Strategy

Elective Papers: Two from any one Functional Area (Major) and two from a different Functional Area (Minor)

FM/ MM/HR/OM/BA/ MIS/ HCM– 301 FM/ MM/HR/OM/BA/ MIS/ HCM – 302 FM/ MM/HR/OM/BA/ MIS/ HCM – 303 FM/ MM/HR/OM/BA/ MIS/ HCM – 304

MB – 303 Internship Project and Viva Voce

Semester – IV

Elective Papers (Four from Major Functional Area and Two from Minor Functional area) **

FM/ MM/HR/OM/BA/ MIS/ HCM – 401

FM/ MM/HR/OM/BA/ MIS/ HCM – 402 FM/ MM/HR/OM/BA/ MIS/ HCM – 403 FM/ MM/HR/OM/BA/ MIS/ HCM – 404 FM/ MM/HR/OM/BA/ MIS/ HCM – 405 FM/ MM/HR/OM/BA/ MIS/ HCM – 406

****The Major and Minor Functional areas will be same as chosen in the 3rd Semester.**

Elective Papers for Third Semester

Functional Specialization (3rd Semester)

MARKETING		OPERATIONS	
CODE	**COURSE NAME**	**CODE**	**COURSE NAME**
MM 301	B2B MARKETING	OM 301	SUPPLY CHAIN & LOGISTICS MANAGEMENT
MM 302	DIGITAL & SOCIAL MEDIA MARKETING	OM 302	OPERATIONS STRATEGY
MM 303	IMC/ PROMOTION STRATEGY	OM 303	QUALITY TOOLKIT FOR MANAGERS
MM 304	MARKETING RESEARCH	OM 304	PRICING & REVENUE MANAGEMENT

FINANCE		HUMAN RESOURCE	
CODE	**COURSE NAME**	**CODE**	**COURSE NAME**
FM 301	TAXATION	HR 301	TEAM DYNAMICS AT WORK
FM 302	PROJECT APPRAISAL & FINANCE	HR 302	HR METRICS AND ANALYTICS
FM 303	BEHAVIORAL FINANCE	HR 303	CROSS CULTURAL MANAGEMENT
FM 304	CORPORATE FINANCE	HR 304	ORGANIZATIONAL DESIGN
MIS		**BUSINESS ANALYTICS**	
MIS 301	DATA MINING FOR BUSINESS DECISIONS	BA 301	DATA MINING
MIS 302	E-COMMERCE & DIGITAL MARKETS	BA 302	MARKETING ANALYTICS
MIS 303	MANAGING SOFTWAREPROJECTS	BA303	BUSINESS FORECASTING
MIS 304	DATA SCIENCE USING R	BA 304	DATA SCIENCE USING R

Elective Papers for Fourth Semester

Functional Specialization (4th Semester)

MARKETING		OPERATIONS	
CODE	**COURSE NAME**	**CODE**	**COURSE NAME**
MM 401	CONSUMER BEHAVIOUR	OM 401	SALES & OPERATIONS PLANNING
MM 402	RETAIL MANAGEMENT	OM 402	BEHAVIORAL OPERATIONS MANAGEMENT
MM 403	SALES & DISTRIBUTION MANAGEMENT	OM 403	OPERATIONS RESEARCH APPLICATIONS
MM 404	SERVICE MARKETING	OM 404	SUPPLY CHAIN ANALYTICS
MM 405	PRODUCT & BRAND MANAGEMENT	OM 405	MANAGEMENT OF MANUFACTURING SYSTEM
MM 406	INTERNATIONAL MARKETING	OM 406	SOURCING MANAGEMENT
FINANCE		**HUMAN RESOURCE**	
CODE	**COURSE NAME**	**CODE**	**COURSE NAME**
FM 401	INVESTMENT ANALYSIS & PORTFOLIO MANAGEMENT	HR 401	MANPOWER PLANNING RECRUITMENT & SELECTION
FM 402	MANAGING BANKS & FINANCIAL INSTITUTIONS	HR 402	EMPLOYEE RELATIONS&LABOUR LAWS
FM 403	MERGERS, ACQUISITION & CORPORATE RESTRUCTURING	HR 403	COMPENSATION & BENEFITS MANAGEMENT
FM 404	FINANCIAL DERIVATIVES	HR 404	PERFORMANCE MANAGEMENT SYSTEMS
FM 405	INTERNATIONAL FINANCE	HR 405	STRATEGIC HRM
FM 406	FINANCIAL MARKETS & SERVICES	HR 406	INTERNATIONAL HRM
MIS		**BUSINESS ANALYTICS**	
MIS 401	IT CONSULTING	BA 401	DATA VISUALIZATION FOR MANAGERS
MIS 402	MANAGING DIGITAL PLATFORMS	BA 402	BIG DATA TECHNOLOGY
MIS 403	STRATEGIC MANAGEMENT FOR IT	BA 403	STATISTICS FOR BUSINESS ANALYTICS
MIS 404	RELATIONAL DATABASE MANAGEMENT SYSTEM	BA 404	DATABASE MANAGEMENT SYSTEM
MIS 405	MANAGEMENT OF INFORMATION TECHNOLOGY	BA 405	DATA ANALYTICS USING PYTHON
MIS 406	MANAGING DIGITAL INNOVATION & TRANSFORMATION	BA 406	HR METRICS AND ANALYTICS

FIRST SEMESTER

MB 101: MANAGERIAL ECONOMICS (MICRO)

MODULE I

1. Introduction to Managerial Economics **[2L]**

(a) Basic problems of an economic system
(b) Goals of managerial decision making
(c) Resource allocation using PPC

2. Demand Analysis **[10 L]**

A. Demand Functions - Law of Demand, Explaining the law of demand, Violations of the Law of Demand, Shifts in Demand; Elasticity of Demand: Price Elasticity (at a point and over and interval), Factors affecting price elasticity, Price elasticity and Change in Total Revenue, AR, MR and Price elasticity, Range of Values of Price Elasticity; Income Elasticity, Inferior, Superior and Normal goods, Income Elasticity and Share in Total Expenditure; Cross-Price Elasticity, Substitutes and Complements
B. Indifference curves, budget line and consumer equilibrium
C. Introduction to methods of demand estimation (concepts only)

3. Production and Cost Analysis **[14L]**

A. Production Function, Short Run and Long Run, Production with One Variable Input, Total Product, Average and Marginal Products, Law of Variable proportions, Relationship between TP, AP and MP.
B. Short Run Costs of Production, Fixed and Variable Costs, Short Run Total, Average and Marginal Cost and Relationship between them, Short Run Cost Curves, Relationship between AVC, MC, AP and MP; Long run cost curves, Relationship between LAC and SAC, Economies of Scale and Scope.
C. Production with Two Variable Inputs, Isoquants – Characteristics, Marginal Rate of Technical Substitution, Laws of Returns to Scale, Isocost Curves, * # Finding the Optimal Combination of Inputs, Production of a given output at Minimum Cost, Production of Maximum Output with a given level of Cost, Expansion Path, Finding the Long Run Cost Schedules from the Production Function,
D. Law of supply, elasticity of supply, market equilibrium, changes in equilibrium.

MODULE II

4. Alternate Goals of Managerial Firms **[2 L]**

(A) Profit maximization

(B) Revenue maximization

(C) Managerial utility maximization

5. Managerial Decision Making under Alternative Market Structures **[6 L]**

A. Characteristics of Perfect Competition, #Profit Maximization in Competitive Markets, Output Decision in the Short Run, Shut Down Point, Short Run Supply for the Firm and Industry; Output Decision in the Long Run, Break Even Point, Long Run Supply for the Perfectly Competitive Industry

B. Price and output decision under different market structure – Monopoly, Monopolistic Competition, Oligopoly – cartel, price leadership.

6. Pricing Decisions **[6 L]**

A. Price Discrimination under Monopoly, Transfer Pricing.
B. Market Failure
C. Game theory &Asymmetric information

Suggested Readings:

1. Damodaran, Suma – Managerial Economics – Oxford University Press
2. Lipsey & Chrystal – Economics – Oxford University Press
3. Peterson & Lewis – Managerial Economics – Pearson Education.
4. Pindyck and Rubenfeld - Micro Economics – Pearson Education
5. H.L. Ahuza- Managerial Economics, S. Chand
6. D.N. Dwivedi- Managerial Economics, Prentice Hall.

MB 102: ORGANIZATIONAL BEHAVIOUR

MODULE I

A. **OB – Overview** – Meaning of OB, Importance of OB, Field of OB, Contributing Disciplines, Applications in Industry. [2L]

B. **Personality**– Meaning of Personality, Determinants of Personality, Theories of Personality, Measurement of Personality, Development of Personality [6L]

C. **Perception –** Process and Principles, Nature and Importance, Factors Influencing, Perception, Perceptual Selectivity, Social Perception, Fundamentals of Decision making.

[4 L]

D. **Work Motivation –** Approaches to Work Motivation, Theories of Motivation – Maslow's Hierarchy of Need Theory, Alderfer's ERG Theory, Herzberg's Motivation-Hygiene Theory, McClelland's Achievement – Motivation Theory, McGregor's Theory X & Y, Vroom's Expectancy Theory, Porter Lawler Expectancy Model [6L]

E. **Attitudes and Job Satisfaction –** Sources of Attitudes, Types of Attitudes, Attitudes and Consistency, Cognitive Dissonance Theory, Attitude Surveys. [2L]

MODULE –II

F. **Organization -** Mission, Goals, Characteristics, Types, Organizational Theory- Classical Theories: Scientific Management, Administrative Principals, Bureaucracy, Human Relation Approach, Modern Theories: System Approach, Contingency Approach, Quantitative Approach, Behavioral Approach, Managing Organizational Culture. [6L]

G. **Group Behavior -** Characteristics of Group, Types of Groups, Stages of Development, Group Decision-making, difference work group and work team, Why work Teams, Work team in Organization, Team Building, Organizational Politics. [4L]

H. **Leadership -** Leadership Theories, Leadership Styles, Skills and influence process, Leadership and power, Examples of Effective Organizational Leadership in India, Cases on Leadership, Success stories of today's Global and Indian leaders. [4L]

I. **Conflict in Organization -** Sources of Conflict, Types of Conflict, Conflict Process, Johari Window, Conflict Resolution, Cases on Conflict Resolution. [2L]

J. **Organizational Change -** Meaning and Nature of Organizational Change, Types of Organizational Change, Forces that acts as stimulant to change. Resistance to change, How to overcome resistance to change, Approaches to managing Organizational Change, Kurt Lewin's three Step model, Action research model, Kotter's eight step model.

[4L]

Suggested Readings:

1. Robbins, S.P. Judge, T.A. & Sanghi, S.: Organizational Behaviour, Pearson
2. Luthans, Fred: Organizational Behaviour, McGraw Hill
3. Newstrom J.W. &Devis K.: Organizational Behaviour, McGraw Hill
4. Aswathappa ,K : Organisational Behaviour ,Himalaya Publishing House
5. Shukla, Madhukar : Understanding Organizations – Organizational Theory & Practice in India, Prentice Hall
6. Sekharan, Uma: Organisational Behaviour , The Mc Graw –Hill Companies

MB 103: BUSINESS COMMUNICATION

Module I:

1. **Principles of Communication** – Definition, Purposes, Types, Process, Models and Barriers [2L]

2. **Verbal and Non Verbal Communication** – Presentation Skills (Planning and Preparation/ Using Visual Aids/ Delivery), Individual and Team Presentations, Public Speaking, Listening and Feedback, Body Language [4L+6 P]

3. **Written Communication** – Stages of Writing, Composing Business Messages, Preparing Notes, Style, Punctuation, Using simple words, Proof Reading. [4L]

4. **Report Writing** – Report Planning, Types of Reports, Developing an outline, Nature of Headings, Ordering of Points, Logical Sequencing, Graphs, Charts, Executive Summary, List of Illustration, Report Writing. [4L]

Module II:

5. **Internal Communication** – Circulars, Notices, Memos, Agenda and Minutes [4L + 2P]

6. **External Communication** – Resume/CV, Using Facsimiles (Fax), Electronic Main, Handling Mail [4 L]

7. **Writing Business Letters** – Formats, Styles Types – Request, Enquiry, Placing Order, Instruction, Action, Complaint, Adjustment, Sales, Reference, Good News & Bad News, Acknowledgement [2L + 4P]

8. **Handling Business Information** – Annual Report, House Magazine, Press Release, Press Report [2 L + 2P]

Suggested Readings:

1. Monipally: Business Communication, Tata McGraw Hill
2. Business Communication Essentials (6th Edition) by Courtland L. Bovee & John V. Thill, Pearson
3. Business English: A Complete Guide for All Business and Professional Communications by Prem P. Bhalla; UBS Publishers
4. The Effective Presentation: Talk your way to success by Asha Kaul; SAGE
5. Madhukar: Business Communications; Vikas Publishing House
6. Senguin J: Business Communication; Allied Publishers

MB 104: LEGAL AND BUSINESS ENVIRONMENT (MICRO & MACRO)

Module I: Legal Environment

1. **Legal Aspects of Business** - Society, State and Law, Enforceability of Law, Mercantile Law. [2L]

2. **Indian Contract Act, 1872** – Contract defined, Elements of valid contract, Classification of contracts, Offer and acceptance, Consideration, Capacity to contracts, Free consent, Legality of object and consideration, Illegal agreements, Termination of contracts, Breach of contract, Indemnity and guarantee, Laws of agency [6L]

3. **Sale of Goods Act, 1930** – Classification of goods, Conditions & Warranties, Passing of ownership rights, Rights of an unpaid seller, Remedies for breach of Contract of Sale of Goods. [4L]

4. **Negotiable Instruments Act, 1881** – Definition and characteristics of different types of negotiable instruments, Parties to a negotiable instrument and their capacity, Dishonour of cheques, Discharge from Liability, Crossing of cheques, Bank drafts and Banker's cheques. [4L]

5. **Companies Act, 1956** – Nature and kinds of companies, Formation, Memorandum, Articles, Prospectus, Capital – shares, debentures, borrowing powers, minimum subscription, Appointment of Directors; Winding up of companies (Including Amendments) [6L]

6. **Consumer Protection Act, 1986** – Salient features and objectives of the Consumer Protection Act, 1986, Different Consumer redressal Forums, Composition and jurisdiction of district, state and National forum, Mode of complaints, Procedures for disposal of complaints, Penalty. [4L]

7. **Intellectual Property Right**- Laws relating to Patents (Patent Act, 1970), Trademarks (Trademark Act, 1999), Copyright (Copyright Act, 1957), Geographical Indications (Registration & Protection) Act, 1999 [4L]

Module II: Business Environment

8. **Economic Indicators** – Consumer Price Index, Interest Rate, Inflation Rate and its impact on Business, Business Risk [4L]

9. **Intellectual Property Regime** (WTO Guidelines) [2L]

10. **Legislation for Anti competitive and Unfair Trade Practice** – Objectives of MRTP Act, 1969, Objectives of Competition Act, 2002, Monopolistic Trade Practice, Anti competitive Agreement, MRTP vs Competition Act [4L]

Suggested Readings:

1. Sen & Mitra: Commercial law; World Press
2. Pathak: Legal Aspect of Business, TMH
3. Das & Ghosh: Business Regulatory Framework: Ocean Publication, Delhi
4. Pillai & Bagavathi: Business law, S. Chand
5. Dutt & Sundaram: Economic Environment of Business, S. Chand
6. Misra, S. K & Puri, D. K.: Economic Environment of Business, Himalaya Publishing

MB 105: INDIAN ETHOS AND BUSINESS ETHICS

Module – I: Indian Ethos

1. **History & Relevance**; Principles, practiced by Indian Companies; Role of Indian Ethos (Management lessons from Vedas, Mahabharata, Bible, Quran, Arthashastra,) Indian Heritage in Business. Ethics Vs Ethos, Indian Vs Western Management; Work ethos and values for Indian Managers [6L]
2. **Relevance of Value-based Management in Global change-** - impact of Values on stake holders; Trans-cultural human values ; Secular - Vs Spiritual values; value system in work culture [4 L]

3. **Stress Management**, - meditation for mental health, yoga [2 L]
4. **Contemporary Approaches to Leadership** – Joint Hindu Family business; Leadership qualities of Karta [2 L]
5. **Indian systems of learning**- Gurukul system of learning, advantages – disadvantages of Karma, Importance of Karma to managers , Nishkama Karma- laws of Karma ; Law of creation- Law of humility- Law of growth – Law of Responsibility- Law of connection – Corporate Karma Leadership [6 L]

Module - II: Business Ethics

6. **Understanding Business Ethics** – Ethical Values, Myths and Ambiguity, Ethical Codes, Ethical Principles in Business; Theories of Ethics, Absolutism vs. Relativism [6 L]
7. **Approaches to Business Ethics**: Teleological Approach, The Deontological Approach , Kohlberg's Six Stages Of Moral Development (CMD) [4 L]
8. **Managing Ethical Dilemma**: Characteristics, Ethical Decision Making, Ethical Reasoning, The Dilemma Resolution Process; Ethical Dilemmas In Different Business Areas Of Finance, Marketing, HRM and International Business [4 L]
9. **Ethical Culture in Organizations** – Developing Code of Culture in Organization, Ethical and Value-Based Leadership. Role of Scriptures in Understanding Ethics, Ethics in Business, Strategies of Organizational Culture Building, Ethical Indian Wisdom and Indian Approaches towards Business Ethics. [6 L]

Suggested Readings

1. Beteille, Andre - Society and Politics in India, OUP
2. Chakraborty, S. K. - Values and Ethics for Organisations, OUP
3. Fernando, A.C. - Business Ethics - An Indian Perspective, Pearson
4. Gupta, Dipankar - Social Stratificaiton, OUP.
5. Srinivas, M. N.- Social Structure and Caste and Other Essays, OUP.
6. Sandhya, N- Indian Society, Vrindya Publication

MB 106: QUANTITATIVE TECHNIQUES

Module I:

1. **Linear Programming:** Formulating maximization/minimization problems, Graphical solution, Simplex method, Artificial Variables – Big M – Method, Special cases of LP, Duality of LP and its interpretation, Post Optimality/Sensitivity Analysis, Applications of LP. [6L]

2. **Transportation Problems:** Introduction - Mathematical formulation of transportation problem - the Transportation method for finding initial solutions-North West Corner Method - Least Cost Method - Vogel's Approximation method - test for optimality - steps of MODI method-loops in transportation table - Degeneracy. [6L]
3. **Assignment Problems:** Introduction - Mathematical statement of the problem-Hungarian method of solution - Maximization case in assignment problem—unbalanced assignment problem - restrictions on assignment - Travelling salesman problem. [4L]
4. **Theory of Games:** Introduction - Two person zero sum games - Pure strategies - games with saddle points - rules to determine saddle points - mixed strategies - Game without saddle points - the rules of dominance - Methods of solution for games without saddle points—algebraic methods, graphical methods. [4L]

Module II:

5. **Basic Statistics:** Basic Concept (Variables, Population v/s Sample, Central tendency, Dispersion, data Visualization, Simple Correlation and Regression. [4L]
6. **Probability & Distribution:** Probability – Introduction, Rules of Probability, Conditional Probability (Baye's Theorem), Random Variables, Discrete and Continuous Distributions (Binomial, Poisson and Normal), Sampling – Types and Distribution. [6L]
7. **Theory of Estimation:** Estimation – estimation problems, standard error, margin of error, confidence error, confidence interval, characteristics of estimators, consistency unbiasedness, sufficiency and efficiency, most sufficient estimators. Point Estimation and Interval Estimation. [4L]
8. **Statistical Inference:** Hypothesis Testing, Parametric Test – Z, F, t test, ANOVA, Non Parametric Test – Chi square test (goodness of fit, independence of attributes) Spearman's Rank Correlation Coefficient. [6L]

Software Packages to be used in illustrating the above methods

Suggested Readings

1. Statistics by Wayne L. Winston
2. Business Statistics by GC Berry
3. Business Statistics, Problems & Solutions by JK Sharma
4. Operations Research by A Ravindran, Don T Philips and James J Solberg..
5. Operations Research by V K Kapoor
6. Operations Research by S K Kalavathy

SECOND SEMESTER

MB 201: INDIAN ECONOMY AND POLICY

MODULE I

1. Circular Flow of Income

National Income Accounting –terms and concepts, three methods of measuring GDP/GNP (3L)

2. Theory of Income Determination

Simple Keynesian model: Aggregate demand – Aggregate supply method, Savings- investment method

Concepts of multiplier: Autonomous expenditure multiplier, introducing the Government, Government expenditure multiplier, Tax Rate Multiplier, Balanced Budget Multiplier, Open economy - Export and import multipliers.

Paradox of Thrift, Crowding out effect, Business cycle – phases and stabilization (6L)

3. Introduction of Money and Asset Market

IS-LM model, Fiscal policy and monetary policy using IS-LM (4L)

4. Inflation and Unemployment

Concepts of inflation – demand pull and cost push, Stabilization policies

Introduction to Philips curve as relation between inflation and unemployment. (3L)

5. Introduction to Foreign Trade & International Linkages

Concepts of Balance of Payments

Alternative exchange rate systems – fixed, flexible and managed float

Comparative Advantage as basis for trade;

Tariff and non-tariff barriers (4L)

MODULE II

6. Indian Economy - An Overview

Evolution of Indian economy since independence

Liberalization of Indian economy since 1991 (4L)

7. New Industrial Policy

LPG model, New Industrial Policy (1991) (4L)

8. Banking and Capital Market Reforms
Banking structure in India, Composition of
Indian Capital market,
SEBI and Capital Market Reforms (4L)

9. Monetary and Fiscal Policy Reforms Composition
of Indian money market Components and Instruments
of Monetary policy
Concepts and Management of Deficits (4L)

10. Trade Policy Reforms
Major components of trade policy reforms Idea of
FEMA, NITI AYOG role and function
Current and capital account convertibility. (4L)

Suggested Readings:

1. Principles of Macroeconomics - SoumyenSikdar, (OUP)
2. Managerial Economics - Suma Damodaran, (OUP)
3. Macroeconomics – Dornbusch , Fischer &Startz (PHI)
4. Economic Environment of Business: S.K. Mishra and V.K. Puri,
5. Indian Economy: Datt & Sundharam,
6. Indian Economy since Independence, Uma Kapilaed.

MB 202: FINANCIAL REPORTING, STATEMENT AND ANALYSIS

MODULE I

1. **Basic Financial Accounting Concept:** Meaning and Scope of Accounting **-**Definition of accounting-classification of accounting- GAAP- Accounting Concepts and Conventions – Accounting Equation (2L)
2. **Preparation Of Books Of Accounts:** Event-Transaction- Accounting Cycle – Golden Rule-Journal-Ledger-Trial Balance-Final Account (10L)
3. **Basic Cost Accounting Concept-** Cost Concept-Cost Unit- Technique of Costing- Method of Costing- Cost center- Cost Unit- Cost Sheet preparation and Interpretation. (4L)
4. **Introduction to Accounting Standard:** Introduction to Indian GAAP and IndAS- Introduction to IFRS and IAS- Comparative Analysis of Indian GAAP and IndAS. (4L)

MODULE II

5. **Preparation Of Financial Statement:** Trading Account-Profit & Loss Account - Balance Sheet (As per Schedule VI, old & new) with Adjustment Entries - Preparation and Interpretation of Annual Report -Corporate Social Responsibility – Human Resource Accounting-Value Added Statement (10L)

6. **Financial Statement Analysis:** Comparative Statement- Common Size Statement- Trend Analysis- Ratio Analysis**-**Fund Flow Statement - Cash Flow Statement. (10L)

Suggested Readings:

1. M. Hanif & A. Mukherjee : Financial Accounting. McGraw Hill
2. S. K. Paul: Financial Accounting, New Central book Agency
3. S. P. Jain & K. L. Narang: Cost and Management Accounting. Kalyani Publication
4. P. M. Rao: Financial Statement Analysis and Reporting. PHI
5. T. P. Ghosh, N. Ankarnath, K. J. Mehta & Y. A. Alkafazi: Understanding IFRS Fundamentals, Wiley
6. Tulsian & Tulsian: Corporate Financial Reporting, S. Chand

MAKAUT/MBA/2nd SEM

MB 203: MARKETING MANAGEMENT

MODULE I

1. **Introduction:** Definitions of marketing; Core Concept of Marketing – need, want, demand, offering and branding, value and satisfaction, Evolution of marketing concepts (orientations); Marketing Mix – 4Ps and 4Cs. [2 L]

2. **Marketing Environment:** Major components of Internal Environment, the micro-environment and macro-environment; SWOT Analysis, PEST Analysis [2 L]

3. **Strategy and Planning:** Concept of SBU, Choice of Corporate level Strategy; BCG matrix, Product-Market Grid, Porter's Five Force Model for Industry Analysis. [4 L]

4. **Market Segmentation, Targeting and Positioning (STP):** Concepts of market segmentation: Various bases for segmentation: Geographic, Demographic, Psychographic (VALS-II) and Behavioural; Targeting: Mass marketing, Segment Marketing, Niche Marketing, Micro Marketing and Customization; Concept of Differentiation and Positioning. [4 L]

5. **Consumer Behaviour and Marketing Research:** A framework of consumer decision making process, overview of major factors influencing consumer behavior; marketing research: Role in decision making, Steps and process of Marketing Research, B2B Marketing. [4 L]

MODULE II

6. **Product:** Product Classification, Service – characteristics and expanded service mix elements; Product Levels, Product Mix, Product Line Management, Product Life Cycle: concept and types, New Product Development. [6 L]

7. **Branding and Packaging:** Purpose of branding; Brand equity; Branding strategies; Purpose of Packaging; Types of Packaging – primary, secondary, shipping packages. [3 L]

8. **Pricing:** Procedure for price setting; Pricing objectives; Cost and Demand consideration; Pricing Methods, Pricing Strategies [3 L]

9. **Marketing Channels:** Channel flows and functions; Channel design decisions; Wholesaling and Retailing, Concept of Supply Chain Management and Logistics Management, Channel Conflict Management [5 L]

10. **Promotion:** Elements of Promotion Mix (Advertising, Sales Promotion, Personal Selling, Direct Marketing, Publicity & PR), 5M model of Advertising, Concept of Digital Marketing; Overview of Selling Process [5 L]

11. **Basic concepts of market potential**: Sales potential/ Market Share and Sales forecast; Methods of Sales forecasting. [2 L]

Suggested Reading:

1. Kotler, P., Keller, K., Koshy, A. & Jha, M. - Marketing Management; Pearson
2. Ramaswamy & Namakumari - Marketing Management; McMillan
3. Saxena, R. - Marketing Management; TMH
4. Kurtz, David L, Boone , Louis E - Principles of Marketing; Thomson
5. Keith Blois – Text Book of Marketing; Oxford University Press
6. Etzel, M.J., Walker, B.W. & W.J. Stanton - Marketing; TMH

MAKAUT/MBA/2nd SEM

MB 204: OPERATIONS MANAGEMENT

MODULE I

1. **Introduction to Production and Operations Management:** Difference between Manufacturing and Service Operations; Product Process Matrix capacity planning- Responsibilities of Production Manager; Production as a Coordination Function; Production Cycle, Production Planning & Control Concept. **(4L)**

2. **Characteristics of Manufacturing Systems:** Classification of Manufacturing Systems with Examples; Differences between Intermittent and Continuous Production **(2L)**

3. **Plant Location:** Need for a Good Plant Location; Factors influencing Plant Location – Tangible and Intangible Factors; Economic Survey of Site Selection (**2L)**

4. **Plant Layout:** Need for a Good Plant Layout; Characteristics of a Good Layout; Costs associated with Plant Layout; Process Layout vs. Product Layout; Optimization in a Process Layout and Product Layout; Designing Product and Process Layout; Assembly Line Balancing – Concept and Problems; Cellular Manufacturing Concept **(6L)**

5. **Maintenance Management:** Types of Maintenance – Breakdown and Preventive Maintenance; Total Productive Maintenance (TPM) **(3L)**

MODULE II

6. **Purchase Management:** Purchasing Procedure; Value Analysis; Vendor Selection; Negotiation; Make or Buy decision **(2L)**

7. **Inventory Management:** Classification of inventory items – ABC, FSN, VED classification; Introduction to EOQ and EBQ; MRP – Concept, inputs and outputs, benefits, examples; Deterministic demand model–EOQ- Continuous and Periodic review Inventory models; Master Production Schedule and MRP; Concepts of MRP II, JIT and ERP **(6L)**

8. **Inspection & Quality Control:** Types of Inspection; Statistical Quality Control – Acceptance Sampling and Control Charts **(5L)**

9. **Scheduling:** Sequencing – Definition and Assumptions; Sequencing of n jobs on a single machine – Shortest Processing Time, Longest Processing Time, Earliest Due Date and First Come First Serve basis; Sequencing of 2 jobs on 2 machines – Gantt Charts, Limitations of Gantt Charts; Sequencing of n jobs on 2 and 3 machines – Johnson's Rule; Introduction to Project Management – CPM and PERT, Identification and Importance of the Critical Path **(6L)**

10. **Work Study:** Definition and its Importance; Basic Procedure in Performing a Work Study; Method Study –Objectives and Procedure; Work Measurement–Objectives and Procedure; Concepts of Performance Rating, Basic Time, Allowances and Standard Time **(4L)**

Suggested Readings:

1. Chary, S.N. – Production and Operations Management; TMH
2. Panneerselvam, R. – Production and Operations Management, PHI
3. Bedi, K. – Production and Operations Management; Oxford University Press
4. Chase, Jacobs, Aquilano and Agarwal – Operations Management for Competitive Advantage; TMH
5. Buffa, E. S. and Sarin, R.K. – Modern Production / Operations Management; John Wiley
6. Collier, Evans and Ganguly – Operations Management; Cengage Learning

MB 205: MANAGEMENT INFORMATION SYSTEM

MODULE I

1. E-commerce / E-business [3L]

Overview, Definitions, Advantages & Disadvantages of E-commerce

Business models of e-commerce: models based on transaction party (B2B, B2C, B2G, C2B, C2C, E-Governance), models based on revenue models

Implementation ecommerce business, online and offline marketing

2. ERP, CRM, SCM [10L]

ERP (Enterprise Resource Planning):

Concepts of ERP, architecture of ERP, Generic modules of ERP, Applications of ERP, concept of XRP (extended ERP)

Features of commercial software like SAP, Oracle Apps, MS Dynamics NAV CRM (Customer Relationship Management):

Concepts of CRM, Features, application of CRM Sales force automation

SCM (Supply Chain Management):

Concepts of SCM, drivers of SCM, inbound & outbound

Definition, brief description and applicability of: eProcurement, eTailing, eLogistics, eCollaboration, eIntegration.

Case studies for ERP, CRM, and SCM

3. Data Communication & Networking [4L]

Need for computer networking, components of a data communication system, Network topology

Types of networks: LAN, MAN, WAN; concepts of Internet, Intranet, Extranet, and WWW.

Network protocols, Network Architecture

MODULE II

4. Threats to Computer Systems and Control Measures [2L]

Concepts of threats: Virus, hacking, phishing, spyware, spam, physical threats (fire, flood, earthquake, vandalism)

Concepts of security measures: firewall, encryption

5. Database Management Systems (DBMS) [e.g. MS-Access/ Oracle/ MS SQL Server / MySQL etc.] [4L+2P]

What is a DBMS; Need for using DBMS. Concepts of tables, records, attributes, keys, integrity constraints

SQL: DDL & DML, DCL concepts, SQL commands [ANSI standard].

6. Data Warehousing and Data Mining [3L]

Concepts of Data warehousing, data mart, meta data, multidimensional modeling, Online Analytical Processing (OLAP), Online Transaction Processing (OLTP), Data mining concepts, knowledge discovery v. data mining, data mining applications.

7. MS Office Applications [12 P]

MS Excel: Graphs and Charts–Calculation of various financial functions Performing Mathematical Calculations (using Formula and Functions), Searching, Sorting and Filtering, Min Media Mode, Reference Operators, Functions: Typing a Function, Creating a Column Chart: Changing the Size and Position of a Chart Saving

MS Access: Tables and Queries, Forms, Relationship

MS Power Point: Introduction–Toolbar, their Icons and Commands– Navigating in Power point-Creation of slides, animation, and templates-Designing Presentations– Slide show controls–Making notes on Pages and Handouts–Printing Presentations– Customizing Presentations-Auto content Wizard.

Suggested Readings:

1. Waman S Jawadekar: Management Information Systems – Text and Cases 3ed. McGraw Hill
2. Mahadeo Jaiswal & Monica Mittal: Management Information Systems, OUP
3. Forouzan: Data Communication & Networking, TMH.
4. Tanenbaum: Computer Networks, Pearson Education
5. Ivan Bayross: SQL & PL/SQL, BPB ISRD, Introduction to Database Management Systems, Tata McGraw Hill
6. Sadagopan: ERP: A Managerial Perspective, Tata McGraw Hill.

MAKAUT/MBA/2nd SEM

MB - 206: HUMAN RESOURCE MANAGEMENT

MODULE I

1. **Human Resource Management**: Meaning, Scope, objectives, and functions of HRM , HR as a Factor of Competitive Advantage, Structure of HR Department, , Line and staff responsibility of HR Managers, Environmental factors influencing HRM (2L)

2. **Human Resource Planning:** definition, objective, process of HRP**.** Supply and Demand Forecasting techniques, Manpower Inventory, Career Planning& Development, Succession Planning, Rightsizing, Restructuring. Human Resource Information System (HRIS) (6L)

3. **Recruitment and Selection** : Process, Sources, Methods of selection, Interviewing Methods, Skills and Errors. (4L)

4. **Human Resource Development:** Definition, objective, process of HRD, Assessment of HRD Needs, HRD Methods: Training and Non-Training, Training Process; Designing, Implementation and Evaluation of Training Programmes, Induction Training. Developing Managerial Skills for: team management, collaboration, interaction across business functions, presentation , Negotiation, and Networking (6L)

5. **Performance Appraisal Systems :** Purpose, Methods, Appraisal instruments, 360 degree Appraisal,HR Score Card, Errors in appraisal, Potential Appraisal, Appraisal Interview. (4L)

MODULE –II

6. **Compensation Management** : Concepts, Components; System of Wage Payment, job evaluation, wage/ salary fixation, incentives, bonus, ESOPs, Fringe Benefits, Retirement Benefits. Compensation Plans (4L)

7. **Industrial Relations in India:** Parties; Management and Trade Unions, Industrial Disputes: Trends, Collective Bargaining, Settlement Machineries, Role of Government, Labour Policy in India. (4L)

8. **Workers' Participation in Management:** Concept, Practices and Prospects in India, Quality Circles and other Small Group Activities. (2L)

9. **Discipline Management** : Misconduct, Disciplinary action, Domestic Enquiry, Grievance Handling (4L)

10. **Strategic HRM:** Meaning, Strategic HRM vs Traditional HRM, SHRM Process, barriers to SHRM. Nature of e-HRM, eRecruitment & Selection, e-Performance Management, e-Learning (4L)

Suggested Readings:

1. Agarwala T. - Strategic Human Resource Management, OUP
2. Aswathappa, K. - Human Resource Management, Tata McGraw Hill
3. Jyothi P. & Venkatesh, D.N. - Human Resource Management, OUP
4. Ramaswamy, E.A. - Managing Human Resources, OUP
5. Saiyadain, M.S - Human Resource Management : Tata McGraw Hill
6. Mondal Sabari & Goswami Amal - Human Resource Management: Vrinda Publications

THIRD SEMESTER

MB 301: ENTREPRENEURSHIP & PROJECT MANAGEMENT

MODULE I: ENTREPRENEURSHIP

1. Introduction: Meaning and Concept of Entrepreneurship, Innovation and entrepreneurship, Contributions of entrepreneurs to the society, risk-opportunities perspective and mitigation of risks [2L]

2. Entrepreneurship – An Innovation: Challenges of Innovation, Steps of Innovation Management, Idea Management System, Divergent v/s Convergent Thinking, Qualities of a prospective Entrepreneur [2L]

3. Idea Incubation: Factors determining competitive advantage, Market segment, blue ocean strategy, Industry and Competitor Analysis (market structure, market size, growth potential), Demand-supply analysis [4L]

4. Entrepreneurial Motivation: Design Thinking - Driven Innovation, TRIZ (Theory of Inventive Problem Solving), Achievement motivation theory of entrepreneurship – Theory of McClelland, Harvesting Strategies [2L]

5. Information: Government incentives for entrepreneurship, Incubation, acceleration. Funding new ventures – bootstrapping, crowd sourcing, angel investors, Government of India's efforts at promoting entrepreneurship and innovation – SISI, KVIC, DGFT, SIDBI, Defense and Railways [4L]

6. Closing the Window: Sustaining Competitiveness, Maintaining Competitive Advantage, the Changing Role of the Entrepreneur. [2L]

7. Applications and Project Reports Preparation [4L]

MODULE II: PROJECT MANAGEMENT

8. Definitions of Project and Project Management, Issues and Problems in Project Management, Project Life Cycle - Initiation / Conceptualization Phase, Planning Phase, Implementation / Execution Phase, Closure / Termination Phase [4L]

9. Project Feasibility Studies – Pre-Feasibility and Feasibility Studies, Preparation of Detailed Project Report, Technical Appraisal, Economic/Commercial/Financial Appraisal including Capital Budgeting Process, Social Cost Benefit Analysis [2L]

10. Project Planning – Importance of Project Planning, Steps of Project Planning, Project Scope, Work Breakdown Structure (WBS) and Organization Breakdown Structure (OBS), Phased Project Planning [2L]

11. Project Scheduling and Costing **–** Gantt chart, CPM and PERT Analysis, Identification of the Critical Path and its Significance, Calculation of Floats and Slacks, Crashing, Time Cost Trade-off Analysis, Project Cost Reduction Methods. [6L]

12. Project Monitoring and Control – Role of Project Manager, MIS in Project Monitoring, Project Audit [2L]

13. Case Studies with Hands-on Training on MS-Project [4L]

Suggested Readings:

1. Innovation and Entrepreneurship by Drucker, P.F.; Harper and Row
2. Business, Entrepreneurship and Management: Rao, V.S.P. ;Vikas
3. Entrepreneurship: Roy Rajeev; OUP.
4. Text Book of Project Management: Gopalkrishnan, P. and Ramamoorthy, V.E.; McMillan
5. Project Management for Engineering, Business and Technology: Nicholas, J.M., and Steyn, H.; PHI
6. Project Management: The Managerial Process: Gray, C.F., Larson, E.W. and Desai, G.V.; MGH

MB 302: CORPORATE STRATEGY

MODULE I:

1. Strategic Management: Objectives, policies, Tools – Balanced Score Card, Strategic Management process. [4L]

2. Environmental Scanning: SWOT Analysis, External Environment Analysis (Economic, Legal, Political, Social, Geographic, Technical); Internal Environment Analysis - Strategic Advantage Factors (Finance, Marketing, Production, HR, R & D, etc.) [4L]

3. Strategic Planning: Corporate; Functional and Managerial Goal Setting; Positioning Organization, Models for Resource Allocation, Environmental Turbulence Strategic Investment, Strategic Entry [6L]

4. Formulating Strategies: Corporate, Administrative/Executive and Operating Levels, Developing Functional Strategies – Production/Operations, Finance, Marketing, HR, Materials, R & D; BCG Matrix, Portfolio analysis. [6L]

MODULE II:

5. Implementation of Strategies: Role of Managers, Leadership, Strategic Control System and Measurement, Structural Implementation, Functional Implementation. [6L]

6. Strategic Actions: Mergers, Acquisitions, Diversification, Joint Ventures, De-Merger, etc. [4L]
7. Evaluation of Strategy: Need, Problems, Criteria for Evaluation (Qualitative/Quantitative), Process of Evaluation [4L]

8. Case studies – Strategic Planning and Management [6L]

Suggested Readings:

1. Corporate Strategies: Banerjee, Bani P.; OUP
2. Crafting the Strategy: Das, Ranjan :, Tata McGraw Hill
3. Business Policy and Strategic Management: Kazmi, A., Tata McGraw Hill
4. Global Strategic Management: Mellahi, K.,Frynas, J.G.and Finlay, P., OUP
5. Competitive Strategy: Porter, Michael E., The Free Press
6. Discourses on Strategic Management: Roy, Dilip; Asian Books

ELECTIVE PAPERS

SPECIALIZATION: MARKETING

MODULE I:

MM 301: B2B MARKETING

1. Nature of Business Marketing: Business Marketing Concept, Business vs. Consumer Marketing, Economics of Industrial demand, Types of Industrial Markets, Types of Business Customers, Classifying Industrial Products and Services, Business customers' purchase orientations, Organizational Procurement Characteristics, Environment Analysis in Business Marketing. [6L]

2. Organizational Buying Behavior: Organizational Buying Process, Types of purchases/buying situations, Buying Centre Concept, Inter Personal Dynamics of Business Buying Behaviour, Roles of Buying centre, Conflict Resolution in Decision, The Webster and Wind model of Organizational Buying Behaviour, Ethics in Purchasing. [6L]

3. Business Marketing Research: Differences between B2C and B2B Marketing Research, Sales Forecasting Approaches, Top-Down, Bottom-up approaches. [2L]

4. Market Segmentation: Segmenting, Targeting and Positioning of Business Market, Value based segmentation, Model for segmenting the organizational Market. [4L]

MODULE II:

5. Product Policy of established products: Classification of the product types; the life cycle of the product; Management products; Strategies for established products. Product policy of new product development: Strategies for the development of new products; Marketing systems; Marketing of engineering services. [4L]

6. Formulating Channel Strategy: Nature of Business Marketing channels, Intermediaries, Direct and Indirect Channels, Channel Objectives, Channel Design, Managing Channel Members, Selection and Motivation of Channel Members, Channel conflicts [4L]

7. Pricing Strategy: Price Determinants, Factors that Influence the Pricing Strategies, Pricing Methods, concept of learning curves, Pricing Strategies, Pricing Policies, Terms of Payment, Competitive Bidding, Leasing [2L]

8. The Promotional Strategies: Communication Objectives, Role of personal relation, Advertising, Sales Promotion in Industrial Markets, Trade shows and Exhibitions. [2L]

9. Management of Sales Force: Personal Selling, steps involved in B2B personal selling, process of tendering, Key Account Management, Managing the Industrial Sales Force, Organizing and controlling the industrial sales force activity, planning for sales force deployment. [4L]

10. B2B through E-Commerce: Business-to-Business forms of E-Commerce, Models for B2B ecommerce, marketing strategy for the electronic market place. [4L]

11. Case Studies in Indian context only [2L]

Suggested Readings:

1. Industrial Marketing by P. K. Ghosh; Oxford University Press
2. Indian Cases in B2B Marketing by Dilip Sarwate
3. Fundamentals of Business to Business by Coe John; McGraw-Hill Education
4. Business Market Management by Jr. Anderson James C; Pearson
5. Driving Demand: Transforming B2B Marketing to Meet the Needs of the Modern Buyer by Carlos Hidalgo; Palgrave Macmillan
6. The Challenger Sale by Matthew Dixon, Brent Adamson; Penguin

MM 302: DIGITAL & SOCIAL MEDIA MARKETING

MODULE I:

1. Fundamentals of Digital Marketing: concept, history, types, implementation and benefits of digital marketing [2L]

2. Search Engine optimization: concept of Search Engines optimization, how SEO operates, website domain, file name, design layouts, optimized keywords, keyword frequency weightage, prominence, placement of keywords, finding keyword, word stemming, metatag optimization, title optimization, anchor optimization, mobile SEO techniques. [8L]

3. Social Media Marketing: concept, as a marketing tool, importance of social media marketing, Social marketing strategy (SMO) for business, SMO key concepts, business profile creation, brand awareness, social engagement; Viral marketing, tools of measurement of popularity, traffic , analytics and statistics. [8L]

MODULE II:

4. Facebook marketing: overview-types of facebook pages, growth of business through facebook; profile page setup, page navigation, influencer, ad options, page promotion, identity target ,likes philosophy, create and engaging fans, call to action, video promotion, marketing tricks, FB analytics. [8L]

5. Twitter Marketing: Concept, advantages, implementation of twitter; create of twitter account, follower growth, hash tags, sponsor of twitter/hash tags, twitter analytics. [4L]

6. Google+: Concepts, advantages, creating page on Google+, customization, integration with website/blog, increase in followers, promotion and tools. [4L]

7. Linkedin: concept, benefits, promotion and growth of business using linkedin. [4L]

8. Case Study [2L]

Suggested Readings:

1. Understanding Digital Marketing by Damian Ryan , Pearson
2. Fundamentals of Digital Marketing by Puneet Singh Bhatia
3. Digital Marketing cases from India by Rajendra Nargudkar and Romi Sainy
4. Marketing 4.0: Moving from Traditional to Digital by Kotler, Kartajaya, Setiawan
5. Social Media Marketing by Tracy L Tuten and Michel R Solomon by SAGE
6. Social Media: 2017 Marketing Tools for Facebook, Twitter, Linkedin, Youtube, Instagram and Beyond by Mcdonald Jason.

MM 303: IMC/ PROMOTION STRATEGY

MODULE I:

1. Introduction to Integrated Marketing Communication: Definition, features and role of IMC and its relation with marketing program Concept, Evolution of IMC, Reasons for Growth and Features. Promotional Tools for IMC, IMC Planning Process, Communication Process, AIDA and Hierarchy of Effect Model, Establishing Objectives and Budgeting: Determining Promotional Objectives, Sales vs. Communication Objectives, DAGMAR, Problems in Setting Objectives, and Setting Objectives for the IMC Program. [4L]

2. Elements of IMC: Sales Promotion – Different Types of Sales Promotion, Advantages and Disadvantages. Public Relation and Publicity – Types of PR, Process, Advantages and Disadvantages, Types of Publicity, Direct Marketing – Features, Advantages and Disadvantages, Personal Selling – Features, Advantages and Disadvantages, Advertising – Features, Advantages and Disadvantages,, New Trends in IMC, International Media. [6L]

3. Sales Promotion: Definition, Reasons for rapid growth of sales promotion, Objectives of sales promotion, Types of sales promotion, Tools and techniques of consumer and trade promotion with merits and demerits, Role of sales promotion in IMC programme [4L]

4. Public Relations and Corporate Advertising: Definition, New role of PR, Objectives, tools and techniques of public relations with merits and demerits, Corporate advertising- scope and types, role of PR in IMC programme [2L]

5. Evaluation of Promotional Effectiveness: Reasons to measure effectiveness, What, when, where, how to test, Testing methods - pre-testing and post testing techniques, Essentials of effective measures, Problems with current methods, Measuring effectiveness of other promotion [2L]

MODULE II:

6. Advertisement: Introduction to Advertising: History of advertising, Definition, features and role of advertising, Relationship of advertising with other promotional mixes and marketing mix elements, Various forms of Advertising: (national, retail, cooperative, trade, industrial financial, corporate, public services, political) [2L]

7. Advertising Industry: Advertisers, Advertising agencies and support organizations, Types of agencies, Structure, role and functions of ad agencies, Agency compensation and evaluation. [2L]

8. Advertising Planning and Budgeting: Planning process, steps, situation analysis, objective setting, budgeting, developing promotional strategies, implementation and control, Budgeting approaches – different methods, allocation of budget [2L]

9. Designing an Advertisement: Different dimensions, Importance of creativity to advertising, Creative process, developing a creative brief, Message Strategies: Message structure, Message appeals- rational, emotional, Message source-credibility, attractiveness, power.

[4L]

10. Execution frameworks: for print and electronic media - copywriting, body copy, headlines, layout, visuals, slogans, logos, signatures, storyboards [2L]

11. Media Strategies: Media planning process, Media mix, Coverage, Reach, Frequency, Impact, Scheduling, Different types of media – television, radio, print, outdoor, characteristic features, advantages and limitations, Factors influencing choice of media flows and functions, Channel design decisions.. [4L]

12. Social Media marketing: Concept, role and features of SMO, SEO, Facebook, Twitter, Linkedin, youtube as means of marketing communication. [2L]

13. Advertising and Society: Social – social and cultural, Ethical – deceptive, offensive, economical- effect on consumer choice, competition, cost and prices, and Regulatory aspects of advertising – ASCI [2L]

14. Case Study on aspects of Advertising [2L]

Suggested Readings:

1. Contemporary Advertising: Arens W.F.; TMH
2. Advertising and Promotion: Belch G.E. and Belch M.A; TMH
3. Integrated Advertising, Promotion and Marketing Communications: Clow K.E., Baack D.; Pearson
4. Advertising and Integrated Brand Promotion: O'Guinn T. C., Allen C.T.; South Western
5. Ogilvy on Advertising: Ogilvy David; Pan Books
6. Understanding Digital Marketing: Damian Ryan, Pearson

MM 304: MARKETING RESEARCH

MODULE I:

1. Marketing Research: Introduction, Application of research in managerial decision making, Aims, roles, functions and sources of research, Client-user interface – role conflict and resolution [2L]

2. Research Process: Steps in planning – research purpose and objectives, Converting a manager's problem to a researcher's problem, Problem formulation, research design, data collection, analysis, report presentation, Preparation of the research proposal. [4L]

3. Research Design: Types of research - exploratory studies, descriptive studies, causal studies, Types of information needed - behavioural and non-behavioural correlates [4L]

4. Sources of Data: Primary and secondary source (govt., non-govt. and syndicated research), Errors in data collection [4L]

5. Primary Source – Methods of Data Collection: Focus groups, Observations, Case histories; Surveys – survey methods - structured and unstructured, direct and indirect methods, in- depth interviews, panels, interview media: personal, telephone, internet and mail, questionnaire construction and pre-testing, qualitative and quantitative research. [4L]

MODULE II:

6. Measurement and Scaling: Types of scales (data/levels of measurements), nominal, ordinal, interval, ratio scales, Attitude measurement methods - variability methods (paired comparison, ranking, rating, ordered category sorting), Quantitative judgment methods [6L]

7. Sampling: Census vs. sample, Steps in sampling process, Definition of population, frame, unit and element, Types of sampling: Probabilitistic and non-probabilitistic sampling techniques Determination of sample size [4L]

8. Analysis of Data: Classification of data, Analytical techniques – univariate analysis, hypothesis testing-parametric and non-parametric tests, bivariate analysis. Some multivariate analysis techniques like multiple regression, discriminant analysis, factor analysis, cluster analysis, multi - dimensional scaling and conjoint analysis, forecasting methods (application and interpretation only) [10L]

9. Application Areas: Advertising Sales analysis and forecasting, Case Studies [2L]

Suggested Readings:

1. Research for Marketing Decisions: P. Green and D. Tull and G. Albaum; PHI
2. Marketing Research: Text and Cases; Boyd and Westfall; AIT Bookseller
3. Marketing Research: Luck and Rubin; PHI
4. Marketing Research: D.R. Cooper and P.S. Schindler; TMH
5. Marketing Research: Naresh K Malhotra; Pearson
6. Marketing Research: G C Beri; Tata McGraw Hill

SPECIALIZATION: MANAGEMENT INFORMATION SYSTEM

MIS 301: DATA MINING FOR BUSINESS DECISION

MODULE I:

1. Introduction to Data Mining: Data Mining Concept, Goals, Stages of Mining Process, Applications, Techniques, Knowledge representation methods, Challenges. [4L]

2. Data Preprocessing: Data types, Quality, Descriptive data summarization – central tendency and dispersion measure, Data cleaning, Outlier detection, Data integration and transform, Data reduction. [6L]

3. Association Rule Mining: Market-basket analysis basics, Naïve algorithm, Apriori algorithm, Software for Association Rule Mining. [4L]

4. Classification and Prediction: Decision Tree, Bayesian classification, Rule-based classification, Prediction – Linear Regression [4L]

MODULE II:

5. Data Warehouse and OLAP: Data Warehouse and DBMS, Multidimensional data model, OLAP operations. [6L]

6. Clustering: Basic issues in clustering, Partitioning methods: k-means, Hierarchical methods: distance-based agglomerative and divisible clustering, Cluster Analysis Software. [8L]

7. Data Mining Software and Applications: Text mining: extracting attributes (keywords), structural approaches (parsing, soft parsing), Bayesian approach to classifying text, Web mining: classifying web pages, extracting knowledge from the web, Social impacts of data mining, information privacy and data security, IT Act overview. [6L]

8. Case Study [2L]

Suggested Readings:

1. Tan, Steinbach and Kumar, Introduction to Data Mining, Pearson
2. Han and Camber, Data Mining: Concepts and Techniques, Morgan Kaufmann
3. Foreman, Data Smart: Using Data Science to Transform Information into Insight, John Wiley
4. Dunham, Data Mining : Introductory and Advanced Topics, Pearson

5. Vipin Kumar: Introduction to Data Mining, Pearson
6. Ian, H. Witten, Frank: Data Mining: Practical Machine Learning Tools and Techniques, Elsevier.

MIS 302: E-COMMERCE and DIGITAL MARKETS

MODULE I:

1. E-Commerce /E-Business: Introduction, Advantages and Disadvantages, Benefits, Features, Business models of E-Commerce, Model based on revenue models, Implementation E- Commerce business, Infrastructure Requirement for E-Commerce, Different types of Networking for E-Commerce ,Internet, Extranet and Intranet, Intelligent System, Risk of E- commerce –Overview, Security for E-Commerce, Security Standards, Farewell, Cryptography [8L]

2. M-Commerce: Definition, Classification, Advantages and Disadvantages, Benefits, Pitfalls of M-Commerce, Hand Held Devices, Mobility and Commerce, Mobile Computing, Wireless Web, Payment Mode. [6L]

3. E-Strategy: Overview, Strategic Methods for developing E-Commerce, E-Advertisement, Payment Mode, E-Cheque, E-cash, E-Threats and Protection [6L]

MODULE II:

4. ERP and SCM: Definitions-ERP,CRM,SCM, Concept of ERP, Evolution of ERP, Scope and Problem of ERP selection and Implementation ,Selection of EEP process, Feature of Commercial Software, Concept of CRM, Features ,Applications, SRM portal, SCP tools, SCE, Framework, Internet's Effect on Supply Chain Power, Case Study [8L]

5. E- Marketing/ Digital Marketing: E-shopping, Role, Policies ,Online Marketing and Offline marketing, SEO,SMM,SEM, Meta Tags, Content Marketing, Marketing in Digital Age, Telemarketing, Commercial packages for E-shopping Portal, Case Study [6L]

6. EDI: Introduction, Definition, Features, Benefits, Application, Model, Protocol [4L]

7. Case Study [2L]

Suggested Readings:

1. Dropshipping E-commerce Business Model 2019: Steven Sparrow
2. Electronic Commerce: Gray P. Schneider
3. E-Commerce Website Optimization: Dan Croxen-John, Johann van Tonder
4. Electronics Commerce –Technologies and Applications: Bhaskar Bharat, TMH
5. Frontiers of Electronic Commerce: Kalakota ,Whinston, Pearson Education
6. E-Commerce : Strategy Technologies and Applications: Whiteley, David, TMH

MIS 303: MANAGING SOFTWARE PROJECTS

MODULE I:

1. Project Evaluation and Project Planning: Importance of Software Project Management – Activities Methodologies – Categorization of Software Projects – Setting objectives – Management Principles – Management Control – Project portfolio Management – Cost- benefit evaluation technology – Risk evaluation – Strategic program Management – Stepwise Project Planning [8L]

2. Project Life Cycle: Software process and Process Models – Choice of Process models – mental delivery – Rapid Application development – Agile methods – Extreme Programming
   – SCRUM – Managing interactive processes [4L]

3. Effort Estimation: Basics of Software estimation – Effort and Cost estimation techniques – COSMIC Full function points – COCOMO II. Parametric Productivity Model – Staffing Pattern [4L]

4. Activity Planning And Risk Management: Objectives of Activity planning – Project schedules – Activities – Sequencing and scheduling – Network Planning models – Forward Pass and Backward Pass techniques – Critical path (CRM) method – Risk identification – Assessment – Monitoring – PERT technique – Monte Carlo simulation – Resource Allocation
   – Creation of critical patterns – Cost schedules. [6L]

MODULE II:

5. Project Management and Control: Framework for Management and control – Collection of data Project termination – Visualizing progress – Cost monitoring – Earned Value Analysis-

Project tracking – Change control- Software Configuration Management – Managing contracts – Contract Management. [8L]

6. Staffing in Software Projects: Managing people – Organizational behavior – Best methods of staff selection – Motivation – The Oldham-Hackman job characteristic model – Ethical and Programmed concerns – Working in teams – Decision making – Team structures – Virtual teams – Communications genres – Communication plans. [8L]

7. Case Study [2L]

Suggested Readings:

1. Project Management: K. Nagarajan – New Age International Publishers
2. Applied Softer Project Management: Andrew Stellman, Jenifer Greene – O' Reilly Media
3. Software Project Management: Bob Hughes, Mike Cotterell and Rajib Mall:– Tata McGraw Hill, New Delhi.
4. Effective Software Project Management: Robert K. Wysocki – Wiley Publication.
5. Software Project Management: Walker Royce - Addison-Wesley.
6. Managing Global Software Projects: Gopalaswamy Ramesh - McGraw Hill Education (India).

MIS 304: DATA SCIENCE USING R

MODULE I:

1. Programming in R: Basics of R, Conditional and loops, R packages/libraries, Data mining GUI in R, Data structures in R, Exceptions/ debugging in R [4L]

2. Data Wrangling: Reading CSV, JSON, XML, .XLSX and HTML files using R,ETL operations in R, Sorting/ merging data in R, Cleaning data, Data management using dplyr in R [4L]

3. Modeling in R:Linear regression model in R, Multiple linear regressions model, Representation of regression results, Non Linear Regression [10L]

MODULE II:

4. Mining Algorithms using R: Association analysis, Market-based analysis/ rules, Apriori algorithm, Segmentation analysis- types of segmentation, k-means clustering, Bayesian clustering, Principal Component Analysis (PCA) [12L]

5. Time Series Forecasting in R and model deployment: Basics of time series, Components of time series, Time series forecasting, Deploying predictive models [8L]

6. Case Study [2L]

Suggested Readings:

1. R for Data Science – Hadley Wickham and Garrett Grolemund
2. R in Action – Robert Kabacoff
3. R for Everyone: Advanced Analytics and Graphics – Jared P. Lander
4. The R Book – Michael J. Crawley
5. R and Data Mining: Examples and Case Studies – Yanchang Zhao
6. Data Analytics using R - Seema Acharya, Mc. Graw Hill Publication

SPECIALIZATION: FINANCE

FM 301: TAXATION

MODULE I: DIRECT TAX

1. Concepts: Cannons of Taxation, Person, Assessee, Income, Previous Year, Assessment Year, Gross Avoidance, Planning, Exemption, Planning, Exemption, Deduction, Rebate, Relief. [2L]

2. Residential Status and Tax Incidence: Individual and Corporate. [4L]

3. Income Exempted from Tax: Individual and Corporate. [2L]

4. Computation of Taxable Income of Individual, HUF, Firm and Corporate: Heads of Income – Salaries, Income from House Property, Profits and Gains from Business or Profession, Capital Gains, Income from Other sources. Deduction from Gross Total Income – 80CCC, 80D, 80DDB, 80E, 80G, 80GG, 80GGA, 80C, 80U; Set Off and Carry

Forward of Losses – Principles, Meaning, Inter – sources and Inter – head Set Off, Carry Forward and Set Off of Losses under sections 71, 72and 73. [8L]

5. Computation of Tax for Individual, H.U.F, Firm and Corporate: Rate of Tax and Surcharge Tax, Rebate Tax Management – Submission of Return and Procedure of Assessment, Pan, Tan, Preliminary ideas of Deduction and Collection of Tax at Source, Advance Payment of Tax, Refund of Tax, Minimum Alternate Tax. [6L]

MODULE II: INDIRECT TAX

1. Customs Act and Valuation: Basic Concepts only [2L]

2. Goods and Service Tax: GST in India. Features and Advantages, Structure of GST in India: CGST, SGST, UTGST, IGST, Taxes subsumed by GST, Commodities kept outside the scope of GST. Procedure for Registration; Deemed Registration, Cancellation of Registration, Revocation of Cancellation of Registration. Levy and Collection of Tax under GST: 16 Rates structure of GST, Scope of supply, Composition Scheme under GST [8L]

3. Tax Planning: Scheme of Tax Planning, Tax Planning for Salaries, Tax Planning for Profits and gains of Business or Profession, Tax Planning for Capital Gains. [6L]

4. Case Study [2L]

Suggested Readings:

1. Lal and Vasisht, Direct Taxes, Pearson Education
2. Singahnia, Direct Taxes, Taxman
3. Singhania, Indirect Taxes, Taxman
4. Bhagawati Prasad, Direct tax law and Practice.
5. Gaur and Narang, Income Tax law and Practices, Kalyani Publisher
6. T. B. Chatterjee and V. Jalan, How to handle - GST-TDS and GST-TCS, GST audit, GST Annual Return, Book Corporation

FM 302: PROJECT APPRAISAL and FINANCE

MODULE I:

1. Introduction to Project Finance, Overview and Fundamentals- Concepts, Functions, Types, Advantages and Disadvantages, Parties, Perquisites of Project Finance. [4L]

2. Project Finance Risks and Risk Mitigation- Project Conceptualization Risk, Financial Closure Risk , Project Construction Risk , Political Risk , Market Risk ,Supply Chain Risk, Policy Risk, Exchange Risk, Environmental Risk , Force Majeure. [6L]

3. Sources of Capital- Various sources of debt and equity , Prudence in Mix of Long Term and Short Term Finance ,Forms of Long Term Project Finance ,Forms of Short Term Project Finance , Lease , Role of Non-Banking Finance Companies (NBFC) [6L]

4. Project Selection- Projects Procurement Process, Life – Cycle Costing, Market Analysis , Competencies and Promoter Analysis, Loan Documentation - Infrastructure and Public Private Partnership [6L]

MODULE II:

5. Cost of Project -Project specifications , Estimating Fixed Capital Investment in Project , Estimating Working Capital investment in the project, Means of Financing , Concepts of Depreciation and Amortization [4L]

6. Project Feasibility Analysis - Background , Net Present Value (NPV) , Profit v/s Cash Flow, Discount Rate , Tax-Shield on Interest , Tax-Shield on depreciation ,Internal Rate of Return (IRR) , XIRR , MIRR , Project IRR and Equity IRR , Payback Period , Discounted Payback Period , Economic IRR [6L]

7. Financial Projections-Projected Profit and Loss Account, Projected Balance Sheet, Projected Funds Flow, Project IRR , Equity IRR , Loan Servicing Capability: (a) Interest Coverage Ratio (ICR) (b) Debt Service Coverage Ratio (DSCR) (c) Long Term Debt Service Coverage Ratio (LDR) d) Sensitivity Analysis [6L]

8. Case Study [2L]

Suggested Readings:

1. Project Financing: Asset-Based Financial Engineering-John D. Finnerty, Wiley and Sons
2. Project Finance in Theory and Practice: Designing, Structuring, and Financing Private and Public Projects, Stefano Gatti- Academic Press
3. Principles of Project Finance- E. R. Yescombe,Academic Press
4. Corporate and Project Finance Modeling: Theory and Practice- Edward Bodmer, Wiley and Sons
5. Introduction to Project Finance-Andrew Fight, Elsevier
6. PPP And Project Finance -Das, Prabuddha, McGraw-Hill Education

FM 303: BEHAVIORAL FINANCE

MODULE I:

1. Introduction to the Practical Application of Behavioral Finance: Concept of Behavioral Finance, History, Incorporating Investment Behavior into the Asset Allocation Process. [4L]

2. Investment Decision Cycle: Judgment under Uncertainty [2L]

3. Intro to Neoclassical Economics and Expected Utility Theory-Utility/ Preference Functions: Expected Utility Theory [EUT] [4L]

4. Brief History of Rational Thought: Pascal-Fermat to Friedman-Savage Paradoxes[4L]

5. Prospect Theory :Capital Asset Pricing Model, Misconceptions about Market Efficiency, and Agency Theory Prospect Theory, Framing, and Mental Accounting [4L]

6. Information Screening Biases : Anomalies, Noise Trading, and Limits to Arbitrage [2L]

MODULE II:

7. Information Processing: Bayesian Decision Making, Heuristics and cognitive biases Overconfidence, Emotional Foundations, Implication of Heuristics and Biases for Financial Decision-Making, Implications for Overconfidence for Financial Decision- Making, Individual Investors and the Force of Emotion [6L]

8. Forecasting Biases [2L]

9. Emotion and Neuroscience [4L]

10. Group Behavior: Conformism, Herding, Fatal Attractions [4L]

11. Investing Styles and Behavioral Finance [4L]

12. Case Study [2L]

Suggested Readings:

1. Behavioural Finance Chandra. Prasanna.Mcgraw Hill
2. Behavioural Finance M. M. Sulphey. PHI
3. Understanding Behavioral Finance Lucy AckertCengage Learning India
4. Behavioural Finance ,William Forbes, Wiley
5. Behavioral Finance: Psychology, Decision-Making, and Markets ,Richard Deaves , South-Western College Publishing
6. Behavioural Finance, Shuchita Singh Vikas Publishing House

FM 304: CORPORATE FINANCE

MODULE I:

1. Introduction to Financial Management: Scope, Objectives, Functions [2L]

2. Capital Structure: Concepts, Component of Capital, Leverage, Models of Capital Structure [6L]

3. Introduction to Corporate Finance: Meaning of Corporation, Role of Financial Manager, Agency Problem. [2L]

4. NPV as Investment Decision Criteria: Comparing NPV with other methods of Investment Decisions, The problems of multiple rates of Return, Mutually Exclusive Projects, Capital Rationing. [4L]

5. The Investment Decision: The Cash Flow, Equivalent annual Costs, Project Interactions [4L]

MODULE II:

6. Capital Budgeting and Risk: Company and Project Costs of Capital, Measuring Cost of Equity, Cost of Capital, and Risk Adjusted Discount Rate, Sensitivity Analysis, Monte Carlo Simulation, Real Options and Decision Trees [4L]

7. Alignment of Managers and Owners Goal: Practical aspects of Capital Investment Process, Information and Capital Investment, Incentives and their role in agency Problem, Measuring and Rewarding Performance: EVA, Pros and Cons of EVA [4L]

8. Market efficiency and Corporate Financing Basics of EMH, The Anomalies, The lessons for the Corporate Manager [4L]

9. The Financing Decision: The Financing Process, The Financing Mix: Tradeoffs and Theory, The Optimal Financing Mix, The Financing Mix and Choices [4L]

10. The Dividend Decision: Dividend Policy, analyzing Cash Returned to Stockholders, Buybacks, Spinoffs, and Divestures [4L]

11. Case Study [2L]

Suggested Readings:

1. Brearly, Myers, Mohanty: Corporate Finance, Tata McGraw-Hill
2. Copeland Weston Shastri: Financial theory and Corporate Policies, Pearson Education
3. Damodaran: Corporate Finance, Wiley
4. Ehrhardtand Brigham: Corporate Finance- a Focused approach, Thomson Learning
5. Megginson, Smart and Gitman: Principles of Corporate Finance, Thomson Learning
6. Ross, Westerfield and Jaffe: Corporate Finance, Tata McGraw-Hill

SPECIALIZATION: OPERATIONS MANAGEMENT

OM 301: SUPPLY CHAIN AND LOGISTICS MANAGEMENT

MODULE I:

1. Introduction – Value Chain, Value System and Supply Chain, Supply Chain Drivers and Obstacles, Concept of Supply Chain Management (SCM) [4L]

2. Supply Chain Structure – Push-based Supply Chain vs. Pull-based Supply Chain, Trade-off between Push and Pull Strategies, Agile Supply Chain [4L]

3. Supply Chain Strategy – Strategic Decisions in SCM, Relating Supply Chain Strategies with Corporate Strategies, SBU Strategies and Functional Strategies [4L]

4. Role of Sales and Marketing in SCM – Personal Selling in SCM, New Roles for Sales Management, Relationship Marketing in SCM [2L]

5. Operational Aspects in SCM – JIT and Kanban in SCM, Green Logistics, Reverse Logistics, Ethical SCM [4L]

6. Role of Transportation in SCM – Key Role Players in Transportation, Transportation Modes, Performance Characteristics and Selection, Vehicle Scheduling and Routing, Distribution Management [4L]

MODULE II:

7. Sourcing in SCM – Importance of Sourcing in SCM, Buying Decision, Procurement Process, Strategic Sourcing [4L]

8. Supply Chain Planning – Demand Planning, Collaborative Planning, Scope of Planning Initiatives in SCM [2L]

9. Role of Inventory Management in SCM – Need for Inventory Management, Control of Inventory in Retail and Services, Costs in Inventory Management [2L]

10. Information Systems in SCM – Supply Chain Information Systems, Requirements Analysis of IT for SCM, E-Business and SCM, Challenges in Implementing Supply Chain Information Systems [4L]

11. SCM in the Global Environment – Global Business Environment, Approaches to Globalization, an Overview of Global SCM, Challenges in establishing a Global Supply Chain [4L]

12. Case Study [2L]

Suggested Readings:

1. Chandrasekaran, N. – Supply Chain Management – Process, System and Practice; OUP
2. Altekar, R.V. – Supply Chain Management; PHI
3. Chase, R.B., Shankar, R. and Jacobs, F.R. – Operations and Supply Chain Management; MGH
4. Agarwal, D.K. – Supply Chain Management: Strategy Cases and Best Practices; Cengage Learning
5. Chopra S., Meindl,P. and Kalra, D.V. – Supply Chain Management: Strategy, Planning and Operation; Pearson
6. Shah, J. – Supply Chain Management: Text and Cases; Pearson

OM 302: OPERATIONS STRATEGY

MODULE I:

1. Introduction – Innovation and operations discipline; Frameworks for strategy and the decision category approach; Developing an operations strategy; Content of Operations Strategy; The Operations Strategy Matrix; Value chain dynamics and operations decisions; Enterprise architecture and operations strategy. [4L]

2. **Key Elements and Decision Categories** – Vertical integration and outsourcing; Business processes; Process technology decisions and multiple plants; Capacity strategy: How to make decisions on capacity and capacity expansion; Facilities strategies and globalization; Comparisons of plant productivity; facilities strategy and globalization; Sourcing and supplier management; Information systems and the impacts of the electronic economy. [6L]

3. **Capabilities and Different Approaches** – Competing on quality: Sources of quality and different measures of quality; Competing on cost versus competing on availability; Competing on cost versus competing on features and innovativeness; Competition in the various industries: Improving cost and quality. [6L]

4. **Strategic Operations Planning** – Environmental assessment including assessment of technology and competition, organization position assessment, mission, financial and non-financial goals, operational forecasts. [4L]

MODULE II:

5. **Modern Approach to Operations Strategy** – Integrating Operations strategy with Marketing, Finance and HR Strategies. International Operations Management: Key differences between Asia, Europe and USA, Productivity enhancement practices in Asia, Europe and USA, Role of competitive pricing. [6L]

6. **Globalization, Outsourcing and other Critical Issues** – Models for gaining advantage in a global environment; How to position within a value chain; Globalization, joint ventures, sourcing overseas, and macroeconomic effects of off- shoring; Supplier power and overseas sourcing: Moving up the value chain in outsourcing; basic concept of International trade and competitiveness. [6L]

7. **Strategy Implementation** – Tracking goal fulfillment, Quality and productivity, Technology Plans, Mechanization and Automation. Simulation: Techniques of simulation, simulating operational scenarios, integrating operations with other functional areas, simulating service operations based on known distributions. [6L]

8. Case Study [2L]

Suggested Readings:

1. Slack, N., Leewis, M. and Sharma, M.G. – Operations Strategy; Pearson India.
2. Krajewski, L.J. and Ritzman, L.P. – Operations Management – Strategy and Analysis; Addison-Wesley Publishers.
3. Garvin, D.A. – Operations Strategy: Text and Cases; Pearson.
4. Tan, K. H. and Matthews, R. – Operations strategy in action: A guide to the theory and practice of implementation; Edward Elgar Publishing.
5. Hayes, R., Pisano, G. and Upton, D. – Strategic operations: Competing through capabilities; Free Press.
6. Hayes, R. – Operations, Strategy and Technology: Pursuing the Competitive Edge; Wiley India.

OM 303: QUALITY TOOLKIT FOR MANAGERS

MODULE I:

1. Quality Philosophies – Defining Quality, Introduction to TQM, Benefits of TQM, Obstacles in Implementing TQM [2L]

2. Customer Satisfaction – Defining Customer, Customer Perception of Quality, Feedback, Customer Complaints Analysis, Customer Retention [4L]

3. Quality Leadership – Characteristics and Role of Quality Leaders/Gurus, Strategic Planning and Decision Making, Deming Philosophy [4L]

4. Quality Awards – Quality Audits, Documentation, ISO 9000 [2L]

5. Quality Function Deployment – Introduction, Benefits of QFD, Voice of Customer, House of Quality, QFD Process [4L]

6. Failure Mode and Effects Analysis – Reliability and Reliability Requirements, Failure Rate, Stages of FMEA [2L]

MODULE II:

7. Statistical Process Control – 7 QC Tools, Acceptance Sampling Plan, Control Charts – Mean and Range Charts, p-Chart, np-Chart, c-Chart [6L]

8. Continuous Process Improvement - PDCA / PDSA Cycle, Poka yoke, Kaizen, Theory of Constraints, Kaizen, Benchmarking, Business Process Reengineering, Kaikaku [6L]

9. Cost of Quality – Cost of Achieving Good Quality, Cost of Poor Quality, Optimum Quality Level [2L]

10. Six Sigma Implementation – Introduction to Six Sigma, Process Capability Indices, Six Sigma in Manufacturing, DMAIC and DMADV, Technology Development using Design for Six Sigma, Product Design using Design for Six Sigma, Six Sigma in Service Industries [4L]

11. Lean Manufacturing – Concept of Value and Waste, VA, NVA and NNVA activities, Value Stream Mapping, Concept and Features of Lean Manufacturing [2L]

12. Case Study [2L]

Suggested Readings:

1. Besterfield, D.H., Besterfield-Michna, C., Besterfield-Sacre, M. Besterfield, G.H. Urdhwareshe, H. and Urdhwareshe, R. – Total Quality Management; Pearson.
2. Feigenbaum, A.V. – Total Quality Control; MGH
3. Urdhwareshe, H. – Six Sigma for Business Excellence; Pearson
4. Charantimath, P.M. – Total Quality Management; Pearson
5. Omachonu, V.K. and Ross, J.E. – Principles of Total Quality; CRC Press
6. Wilson, L. – How to Implement Lean Manufacturing, Indian Edition; MGH

OM 304: PRICING & REVENUE MANAGEMENT

MODULE I:

1. Introduction – Historical background and context. Financial impact and Implications of Pricing and Revenue Management. [2L]

2. Revenue Management – Introduction, Revenue Management Process, Measuring Revenue Management Effectiveness, Revenue Management in Action. [6L]

3. Pricing Theory and Optimization – Traditional approaches to pricing, Basic pricing optimization, Price response function, Price response with competition, Price differentiation, Economies of price differentiation, Price differentiation and consumer welfare, Variable pricing. [8L]

4. Markdown Management – Markdown Pricing and Optimization; Estimating Markdown sensitivity; Markdown Management in Action. [6L]

MODULE II:

5. Customized Pricing – Introduction and Customized Pricing in Action, Bid Price Approach. [4L]

6. Forecasting – Demand Forecasting – Need, Types, Objectives and Steps. Overview of Qualitative methods, Quantitative methods – Naive, Moving Average (Simple and Weighted), Exponential Smoothing, Linear Regression, Implication of Forecasting in Revenue Management. [6L]

7. Capacity Allocation – Capacity Planning – Long range, Types, Developing capacity alternatives, Capacity Allocation with dependent demands, Forecasting and capacity planning. [4L]

8. Industry Applications – Industry Implementations and Practices, Case Studies. [4L]

Suggested Readings:

1. Philips R.L. – Pricing and Revenue Optimization, Stanford Business Book
2. The Oxford Handbook of Pricing Management Edited by Ozalp Ozer and Robert Philips, Oxford University Press
3. Talluri, K. and Van Ryzin, G. – The Theory and Practice of Revenue Management, Springer.
4. Bodea, T. and Ferguson, M. – Segmentation, Revenue Management and Pricing Analytics, Routledge.
5. Makridakis, S., Wheelright, S.C. and Hyndman, R.J. – Forecasting Methods and Application, Wiley.
6. John Hogan, Joseph Zale and Thomas T Nagle: The Strategy and Tactics of Pricing, published 2016 Routledge.

SPECIALIZATION: HUMAN RESOURCE MANAGEMENT

HR 301: TEAM DYNAMICS AT WORK

MODULE I:

1. Meaning of a Group and Group Dynamics, Classification of Groups – Formal and Informal groups, Command, Task, Interest and Friendship groups. Why people join groups. The dynamics of group formation. Theories of group formation: Classic theory of George Homans, Theodore Newcomb's Balance theory, Exchange theory. Five stage group development model, Punctuated Equilibrium model of development of temporary groups with deadlines. Managerial Implications. [4L]

2. Group Properties: Roles, Norms, Status, Size, Cohesiveness - factors that increase, Decrease group cohesiveness, relationship between group cohesiveness, Performance norms and productivity. Deviant workplace behaviour, Typology of Deviant workplace behaviour, groups and deviant behaviour. Managerial Implications. [4L]

3. The Schachter Study - Implication of the Schachter study, Sociogram, Sociometry. The dynamics of Informal Groups - Norms and Roles in informal groups, informal Roles and the informal organization. The dynamics of formal Groups - Positive and negative attributes of committees. The dysfunctions of group norms violation and

role ambiguity conflict. Groups' contribution to employee satisfaction and performance. Managerial Implications. [4L]

4. Group decision making: Group versus the Individual, strength and weakness of group decision making, Effectiveness and efficiency. Group Think – conformity problem, symptoms of groupthink. Group Shift - risky shift phenomenon. Dysfunctions perspective, social loafing. Group decision making techniques - Interacting groups, Brainstorming, Nominal Group Technique, Electronic meeting, Dialectic Decision Method (DDM), Delphi Technique. Managerial Implications. [4L]

   Case Studies, Presentations, quizzes, experiential exercises, Team exercises, Group Discussions, Role Playing. [4L]

MODULE II:

5. Teams in the modern workplace, why teams have become so popular, difference between group and team, types of teams – problem-solving teams, self-managed work teams, cross-functional teams, virtual teams. Managerial Implications. [4L]

6. Creating effective teams, the Team Effectiveness Model – context, composition, work design, process. Ingredients of effective teams – supportive environment, skills and role clarity, super ordinate goals, team rewards. Potential team problems – changing composition, social loafing. Guidelines for developing effective self-managed teams. Turning individuals into team players, shaping team players – selection, training, rewards. Managerial Implications. [6L]

7. Team building: meaning of team building, need of team building, the process, specific building issues, team leadership, skills useful in team building – process consultation, T- group sensitivity training, communication skills, Negotiation skills, conflict resolution in teams, competitive vs collaborative behavior, developing collaboration facilitating behaviours, feedback. Managerial Implications. [4L]

8. Contemporary issues in managing teams: teams and quality management, teams and workforce diversity. Cultural/global issues. Characteristics of mature teams - individual territories versus team spaces. Managerial Implications. [2L]

   Case Studies, Presentations, quizzes, experiential exercises, Team exercises, Group Discussions, Role Playing. [4L]

Suggested Readings:

1. Robbins, S.P. Judge, T.A. andSanghi, S.: Organizational Behaviour, Pearson
2. Luthans, Fred: Organizational Behaviour, McGraw Hill
3. Newstrom J.W. andDevis K.: Organizational Behaviour, McGraw Hill
4. Aswathappa, K: Organisational Behaviour, Himalaya Publishing House
5. Shukla, Madhukar: Understanding Organizations – Organizational Theory and Practice in India, Prentice Hall
6. Sekharan, Uma: Organisational Behaviour, The Mc Graw –Hill Companies

HR 302: HUMAN RESOURCE METRICS AND ANALYTICS

MODULE I:

1. Introduction: HR metrics - meaning, importance, what metrics should HR measure? Examples of HR metrics. HR Analytics - What is Analytics? Big data and Analytics, Stages in Data Analytics, Types of Analytics, Causal Modeling, What is HR Analytics? Objectives of HR Analytics. Its importance and benefits. [6L]

2. Realigning HR to business priorities, Stages of HR Analytics and the role of technology. Leveraging HR Analytics for organizational success. Mapping Business Analytics and HR Analytics. IMPACT Cycle. Pillars of HR Analytics success. Linking HR metrics to business outcomes. HR measurement tools and techniques: Identifying HR metrics, sources of data, tools and techniques of measurement. Excel, SPSS, SAP and Other software packages. [8L]

3. Human Capital Management (HCM) - Concepts, Phases-Scanning, Planning, Producing, Predicting. The Model for Predictive Management. Value Chain for HCM Model. Predictive Human Capital measurements. Guiding principles of Human Capital Analytics. [4L]

MODULE II:

4. HR Analytics and the HR delivery model. Requisites of effective HR Analytics. HR analytics modules: HR Planning, Hiring, HR Operations, Learning and Development, Performance Management, Compensation and Rewards, Succession Planning, Employee Engagement. [10L]

5. Human Resource Information System (HRIS): Understanding HRIS, Framework of HRIS. Benefits of HRIS. HRIS Trends: Talent Management Analysis, Data Analytics, Social media, cloud mobile enabled, Employee Engagement Analysis. Integrated HRIS. [6L]

6. Data and Information needs for HR Manager - Role of IT in HRM - IT for HR Managers - Concept, Structure, and Mechanisms of HRIS, survey of Software Packages for Human Resource Information System including ERP Software such as SAP, Oracle. EHRM-objectives, advantages and disadvantages. [4L]

7. Case Study [2L]

Suggested Readings:

1. Michael Armstrong, A Handbook Of Human Resource Management Practice, Kogan Page
2. Gueutal and Stone, The Brave New World Of e-HR
3. Monk and Wagner, Concepts In Enterprise Resource Planning, Thomson
4. Steve VanWieren, Quantifiably Better: Delivering Human Resource Analytics from start to finish.
5. Bernard Marr, Data-driven HR: How to use Analytics and Metrics to drive performance.
6. Ramesh Soundararajan, Kuldeep Singh, Winning on HR Analytics: Leveraging data for competitive advantage.

HR 303: CROSS CULTURAL MANAGEMENT

MODULE I:

1. Introduction - Concept of Culture For A Business Context; Organizational Culture and Its Dimensions; Cultural Background of Business Stake-Holders [Managers, Employees, Share -Holders, Suppliers, Customers and Others] – An Analytical Framework [10L]

2. Culture and Global Management - Global Business Scenario and Role of Culture; A Frame Work for Analysis; Elements and Processes of Communication Across Cultures; Communication Strategy for/ of An Indian MNC and Foreign MNC and

High Performance Winning Teams and Cultures; Culture Implications for Team Building [10L]

MODULE II:

3. Cross Culture – Negotiation and Decision Making - Process of Negotiation and Needed Skills and Knowledge Base – Over view with two illustrations from multi cultural contexts [India – Europe/ India – US settings, for instance]; International and Global Business Operations- Strategy Formulation and Implementation; Aligning Strategy, Structure and Culture in an organizational Context. [8L]

4. Global Human Resources Management - Staffing and Training for Global Operations – Expatriate - Developing a Global Management Cadre.. Motivating and Leading; Developing the values and behaviors necessary to build high-performance organization personnel [individuals and teams included] – Retention strategies.[4L]

5. Corporate Culture - The Nature of Organizational Cultures Diagnosing the As-Is Condition; Designing the Strategy for a Culture Change Building; Successful Implementation of Culture Change Phase; Measurement of ongoing Improvement. [6L]

6. Case Study [2L]

Suggested Readings:

1. Cashby Franklin, Revitalize Your Corporate Culture: PHI, Delhi
2. Deresky Helen, International Management: Managing Across Borders And Cultures, PHI, Delhi
3. Esenn Drlarry, Rchildress John, The Secret Of A Winning Culture: PHI,Delhi
4. Deepak Kr. Bhattacharya, Cross Cultural Management, PHI
5. Jessica. L. Whiteman, Richard, L. Griffith, Critical Issues in Cross Cultural Management, Springer
6. Broweays, Understanding Cross Cultural Management; Pearson

HR 304: ORGANIZATIONAL DESIGN

MODULE I:

1. Organization Theory – Classical Theories: Scientific Management, Administrative Principles, Theory of Bureaucracy, Human Relations Approach; Modern Theories: Systems Approach, Information processing Approach, Contingency Approach. Managerial Implications. [4L]

2. The Bureaucratic model, dysfunctions of Specialization, Hierarchy, Rules, Impersonal characteristics. Modern view of Bureaucracies, Modifications of Bureaucratic structuring, types of centralization and decentralization, optimum degree of decentralization, Flat and tall structures, Behavioral implications of Flat versus Tall Structure. Managerial Implications. [4L]

3. Organizational Structure and Design – Understanding organizational structure, Elements of Designs of organization's structure: Work Specialization, Departmentalization, Chain of command, Span of control, Centralization and Decentralization, Formalization Understanding Departmentalization by Function, Product, Location, process, customer. Types of structures: Line, Line and Staff, Functional, Project, Matrix structures. Managerial Implications [6L]

4. Case Studies, Presentations, quizzes, experiential exercises, Team exercises, Group Discussions. [6L]

MODULE II:

5. Mechanistic and Organic Models: Determinants of an Organization's Structure – Strategy, the strategy and structure relationship, Organization Size, Technology and Environment, Three Dimensional Model of the Environment. Organizational Designs and Employee Behaviour. Managerial Implications. [4L]

6. Emerging Organizational Designs: Horizontal design, Network design, Virtual Organization, Boundary less Organization, Learning Organisation, Empowered Organizations, e-Organization: implications for Individual Behaviour, Group behaviour, effects on interpersonal relationships. Restructuring Indian Organisations, Regrouping business activities, strategic business units. Managerial Implications. [6L]

7. Forces reshaping Organizations: Organizational Life Cycles, Impact of Culture on organization Structure, Types and forces of organizational change: Globalization, Changes in Information processing technologies, Automation, Demands on organizational processes. Roles and responsibilities in the changed process. Managerial Implications. [6L]

8. Case Studies, Presentations, quizzes, experiential exercises, Team exercises, Group Discussions. [4L]

Suggested Readings:

1. Robbins, S.P. Judge, T.A. andSanghi, S.: Organizational Behaviour, Pearson
2. Luthans, Fred: Organizational Behaviour, McGraw Hill
3. Newstrom J.W. andDevis K.: Organizational Behaviour, McGraw Hill
4. Aswathappa, K: Organisational Behaviour, Himalaya Publishing House
5. Shukla, Madhukar: Understanding Organizations – Organizational Theory and Practice in India, Prentice Hall
6. Sekharan, Uma: Organisational Behaviour, The Mc Graw –Hill Companies

SPECIALIZATION: BUSINESS ANALYTICS

MODULE I:

BA 301: DATA MINING

1. Introduction to Data Mining: Data Mining Concept, Goals, Stages of Mining Process, Applications, Techniques, Knowledge representation methods, Challenges. [4L]

2. Data Preprocessing: Data types, Quality, Descriptive data summarization – central tendency and dispersion measure, Data cleaning, Outlier detection, Data integration and transform, Data reduction. [6L]

3. Association Rule Mining: Market-basket analysis basics, Naïve algorithm, Apriori algorithm, Software for Association Rule Mining. [4L]

4. Classification and Prediction: Decision Tree, Bayesian classification, Rule-based classification, Prediction – Linear Regression [4L]

MODULE II:

5. Data Warehouse and OLAP: Data Warehouse and DBMS, Multidimensional data model, OLAP operations. [6L]

6. Clustering: Basic issues in clustering, Partitioning methods: k-means, Hierarchical methods: distance-based agglomerative and divisible clustering, Cluster Analysis Software. [8L]

7. Data Mining Software and Applications: Text mining: extracting attributes (keywords), structural approaches (parsing, soft parsing), Bayesian approach to classifying text, Web mining: classifying web pages, extracting knowledge from the web, Social impacts of data mining, information privacy and data security, IT Act overview. [6L]

8. Case Study [2L]

Suggested Readings:

1. Tan, Steinbach and Kumar, Introduction to Data Mining, Pearson
2. Han and Camber, Data Mining: Concepts and Techniques, Morgan Kaufmann
3. Foreman, Data Smart: Using Data Science to Transform Information into Insight, John Wiley
4. Dunham, Data Mining : Introductory and Advanced Topics, Pearson
5. Vipin Kumar: Introduction to Data Mining, Pearson
6. Ian, H. Witten, Frank: Data Mining: Practical Machine Learning Tools and Techniques, Elsevier.

BA 302: MARKETING ANALYTICS

MODULE I:

1. Introduction to Marketing Analytics: Need for Data Driven Marketing Approach, Marketing Engineering, Model Building in Marketing Engineering, Basic Principles of Marketing Analytics to Business Problems, Slicing and Dicing Marketing data with Pivot Tables, Excel Charts to summarize data [6L]

2. Pricing Analytics: Basic Concept of Pricing, Estimating Demand Curves and Optimize Price, Price Bundling, Non Linear Pricing and Price Skimming [6L]

3. Marketing Forecasting: Simple Regression and Correlation, Multiple Regression to forecast sales, Modeling trend and Seasonality, Ratio to Moving Average Method, Winter's Method [4L]

4. Strategic Marketing Analytics: The STP framework, Value generation through STP framework, Managing the segmentation process, Segmentation in Real world: Cluster Analysis, Hierarchical and Non-Hierarchical - K Means Clustering, Prediction of Customer's segment membership: Discriminant Analysis (DA), two Group DA [4L]

MODULE II:

5. Positioning Strategies: Concept of Product positioning, Conduct a Positioning Study, Perceptual Mapping using Principal Component Analysis (PCA), Multidimensional Scaling (MDS), Incorporating preferences into Perceptual Maps [6L]

6. Customer Lifetime Value (CLV): Concept of CLV, Comparison of CLV with related metrics, Analyzing CLV, Extensions of CLV Analysis, Drivers of CLV, Uses of CLV metrics [8L]

7. Product Designing: Concept of Product Designing, Conjoint Analysis as a decompositional preference model, Steps in Conjoint Analysis, Uses of Conjoint Analysis, Drivers of CLV, Uses of CLV metrics [4L]

8. Case Study [2L]

Suggested Readings:

1. Marketing Analytics - Data-driven Techniques with Microsoft Excel by Wayne L. Winston
2. Marketing and Sales Analytics: Proven Techniques and Powerful Applications from Industry Leaders by Cesar A. Brea
3. Marketing Analytics by Winston
4. Data Analytics using R - Seema Acharya, Mc. Graw Hill Publication
5. Advanced Customer Analytics: Targeting, Valuing, Segmenting and Loyalty Techniques' Mike Grigsby

6. Digital Marketing Analytics: Making sense of Consumer Data in digital world, Chuck Hemann, Ken Burbary; Que Publishing

BA 303: BUSINESS FORECASTING

MODULE I:

1. Historical perspective of Business Forecasting: Concept of Business forecasting, Difference among Econometrics, Mathematics and Statistics, Importance of Econometrics, Linkage of Econometrics with Business Forecasting-Types of Data [6L]
2. Regression Model: Steps, Linear, Non linear. [4L]
3. Univariate time series: Linear model, Stationarity, Autocorrelation, Partial Auto correlation, Multicollinerarity, ARIMA, ARMA process. [10L]

MODULE II:

4. Stationarity and Unit Roots Tests: Introduction, Unit Roots tests, Stationarity tests [4L]
5. Univariate Time Series: Volatility Models-Introduction, The ARCH Model, The GARCH Model [6L]
6. Multivariate Time Series Analysis: Vector Autoregression Model–Cointegration [4L]
7. Introduction to E Views: E views Functions, Programming in E views [2L]
8. Introduction to R studios: Programming in R for time series forecasting [2L]
9. Case Study [2L]

Suggested Readings:

1. Damodar N. Gujarati, Basic Econometrics ,McGraw-Hill Publication,2003
2. Chris Chatfield, The Analysis of Time Series: An Introduction , Chapman and Hall
3. N. H. Chan, Time Series: Applications to Finance, John Wiley and Sons,

4. James D. Hamilton, Time Series Analysis, Princeton University Press,
5. Terence C. Mills, The Econometrics of Financial Time Series Cambridge University Press.
6. Box, Jenkins, Reinsel, Ljung, Time Series Analysis: Forecasting and Control; Wiley Publications

BA 304: DATA SCIENCE USING R

MODULE I:

1. Programming in R: Basics of R, Conditional and loops, R packages/libraries, Data mining GUI in R, Data structures in R, Exceptions/ debugging in R [4L]

2. Data Wrangling: Reading CSV, JSON, XML, .XLSX and HTML files using R,ETL operations in R, Sorting/ merging data in R, Cleaning data, Data management using dplyr in R [4L]

3. Modeling in R:Linear regression model in R, Multiple linear regressions model, Representation of regression results, Non Linear Regression [10L]

MODULE II:

4. Mining Algorithms using R: Association analysis, Market-based analysis/ rules, Apriori algorithm, Segmentation analysis- types of segmentation, k-means clustering, Bayesian clustering, Principal Component Analysis (PCA) [10L]

5. Time Series Forecasting in R and model deployment: Basics of time series, Components of time series, Time series forecasting, Deploying predictive models [10L]
6. Case Study [2L]

Suggested Readings:

1. R for Data Science – Hadley Wickham and Garrett Grolemund
2. R in Action – Robert Kabacoff
3. R for Everyone: Advanced Analytics and Graphics – Jared P. Lander
4. The R Book – Michael J. Crawley
5. R and Data Mining: Examples and Case Studies – Yanchang Zhao
6. Data Analytics using R - Seema Acharya, Mc. Graw Hill Publication